HP 5400R zl2 Switches

Installation and Getting Started Guide



Power over Ethernet

HP 5400R zl2 Switches

Installation and Getting Started Guide

HP 5412R zl2 Switch© Copyright 2005 - 2013, 2015 Hewlett-Packard Development Company, L.P.

Manual Part Number

5998-7652
May 2015

Applicable Products

HP 5406R zl2 Switch	J9821A
HP 5412R zl2 Switch	J9822A
HP 5412R 92GT PoE+ / 4SFP+ (No PSU) v3 zl2 Switch	JL001A
HP 5406R 8-port 1/2.5/5/10GBASE-T PoE+ / 8-port SFP+ (No PSU) v3 zl2 Switch	JL002A
HP 5406R 44GT PoE+ / 4SFP+ (No PSU) v3 zl2 Switch	JL003A
HP 5406R 16-port SFP+ (No PSU) v3 zl2 Switch	JL095A
HP 24p 10/100/1000BASE-T PoE+ v3 zl2 Mod	J9986A
HP 24p 10/100/1000BASE-T v3 zl2 Mod	J9987A
HP 24p 1GbE SFP v3 zl2 Mod	J9988A
HP 12p PoE+ / 12p 1GbE SFP v3 zl2 Mod	J9989A
HP 20p PoE+ / 4p SFP+ v3 zl2 Mod	J9990A
HP 20p PoE+ / 4p 1/2.5/5/XGT v3 zl2 Mod	J9991A
HP 20p PoE+ / 1p 40GbE QSFP+ v3 zl2 Mod	J9992A
HP 8p 1G/10GbE SFP+ v3 zl2 Mod	J9993A
8p 1/HP 2.5/5/XGT PoE+ v3 zl2 Mod	J9995A
HP 2p 40GbE QSFP+ v3 zl2 Mod	J9996A
HP 8-port 10GBASE-T v2 zl Module	J9546A
HP 8-port 10GbE SFP+ v2 zl Module	J9538A
HP 20-port Gig-T PoE+ / 2-port 10GbE SFP+ v2 zl Module	J9536A
HP 20-port Gig-T PoE+ / 4-port SFP v2 zl Module	J9535A
HP 24-port SFP v2 zl Module	J9537A
HP 12-port Gig-T PoE+ / 12-port SFP v2 zl Module	J9637A
HP 24-port Gig-T PoE+ v2 zl Module	J9534A
HP 24-port 10/100 PoE+ v2 zl Module	J9547A
HP 24-port Gig-T v2 zl Module	J9550A
HP 20-port Gig-T / 4-port SFP v2 zl Module	J9549A
HP 20-port Gig-T / 2-port 10GbE SFP+ v2 zl Module	J9548A
HP Advanced Services v2 zl Module with HDD	J9857A
HP Advanced Services v2 zl Module with SSD	J9858A
HP 5406R-44G-PoE+/2SFP+ (No PSU) v2 zl2 Switch	J9823A
HP 5406R-44G-PoE+/4SFP (No PSU) v2 zl2 Switch	J9824A
HP 5412R-92G-PoE+/2SFP+ (No PSU) v2 zl2 Switch	J9825A
HP 5412R-92G-PoE+/4SFP (No PSU) v2 zl2 Switch	J9826A
HP 5406R-8XGT/8SFP+ (No PSU) v2 zl2 Switch	J9868A
HP 5400R zl2 Management Module	J9827A
HP 5400R 700W PoE+ zl2 Power Supply	J9828A
HP 5400R 1100W PoE+ zl2 Power Supply	J9829A
HP 5400R 2750W PoE+ zl2 Power Supply	J9830A
HP MSM775 zl Premium Controller Module	J8940A
HP X450 4U/7U Universal 4-Post Rack Mounting Kit	J9852A
HP 5406R zl2 Switch Fan Tray	J9831A
HP 5412R zl2 Switch Fan Tray	J9832A

Disclaimer

HEWLETT-PACKARD COMPANY MAKES NO WARRANTY OF ANY KIND WITH REGARD TO THIS MATERIAL, INCLUDING, BUT NOT LIMITED TO, THE IMPLIED WARRANTIES OF MERCHANTABILITY AND FITNESS FOR A PARTICULAR PURPOSE. Hewlett-Packard shall not be liable for errors contained herein or for incidental or consequential damages in connection with the furnishing, performance, or use of this material.

The information contained herein is subject to change without notice.The only warranties for HP products and services are set forth in the express warranty statements accompanying such products and services. Nothing herein should be construed as constituting an additional warranty. HP shall not be liable for technical or editorial errors or omissions contained herein.

Hewlett-Packard assumes no responsibility for the use or reliability of its software on equipment that is not furnished by Hewlett-Packard.

Warranty

For HP warranty information, visit
www.hp.com/networking/support

A copy of the specific warranty terms applicable to your Hewlett-Packard products and replacement parts can be obtained from your HP Sales and Service Office or authorized dealer.

Safety

Before installing and operating these products, please read the "Installation Precautions" in Chapter 2, and the safety statements in Appendix C.

Hewlett-Packard Company
8000 Foothills Boulevard, m/s 5551
Roseville, California 95747-5551
http://www.hp.com/networking

Contents

1 Introducing the HP 5400R zl2 Switches

Overview of HP 5400R zl2 Switches 1-2
- HP 5406R zl2 Switches 1-2
- HP 5412R zl2 Switches 1-4
- HP 5406R zl2 Switch 1-5
- HP 5412R zl2 Switch 1-6

Network Connectivity, Speeds and Technologies 1-7

Front of the Switch 1-8
- LEDs 1-10
- LED Mode Select Button and Indicator LEDs 1-14
- Console Port 1-15
- Out-of-Band Management (OOBM) Port 1-16
- System Reset Button 1-16
- Clear Button 1-16
- MM Shutdown Button 1-17
- MM Reset Button 1-17

Back of the Switch 1-19
- Power Connector 1-20
- Redundant Power Supply 1-20

Switch Accessories 1-22

Switch Features 1-24

2 Installing the HP 5400R zl2 Switches

Included Parts 2-1
- Switch Accessories 2-2
- Power Cords 2-2

Installation Procedures 2-4
- Summary 2-4

Installation Precautions 2-6
Installation Precautions (continued) 2-7
1. Prepare the Installation Site 2-8
Cabling Infrastructure 2-8
Installation Location 2-8
2. Install Switch Modules 2-8
Installing a Management Module Battery 2-10
3. (Optional) Install Another Power Supply 2-12
4. Verify the Switch Passes Self Test 2-14
LED Behavior: 2-16
5. Mount the Switch 2-16
Rack or Cabinet Mounting 2-17
. 2-18
Horizontal Surface Mounting 2-20
6. Install the Grounding Wire 2-20
7. Connect the Switch to a Power Source 2-21
8. Connect the Network Cables 2-22
10. (Optional) Connect to the Management Console of the Switch . 2-23
Terminal Configuration 2-23
Setting Up a Console Connection 2-24
Console Cable Pinouts 2-26
Telnet Console Access 2-26
Out-of-Band Management (OOBM) Port 2-27
Hot Swapping Switch Modules 2-27
Adding or Replacing Modules 2-28

3 Getting Started With Switch Configuration

Recommended Minimal Configuration 3-1
Using the Switch Setup Screen 3-2
Where to Go From Here 3-4
Using the IP Address for Remote Switch Management 3-5
Starting a Telnet Session 3-5
Starting a Web Browser Session 3-5

4 Replacing Components

Replacing Power Supplies 4-2

Replacing Fan Trays 4-4
Replacing the Management Module 4-5
Replacing the Management Module SD Card 4-6
Installing an SD Card 4-6

5 Troubleshooting

Basic Troubleshooting Tips 5-2
Diagnosing with the LEDs 5-4
HP networking tools 5-10
Hardware Diagnostic Tests 5-11
Reasons for Resetting the Switch 5-11
Methods of Resetting the Switch 5-11
Testing the Switch by Resetting It 5-11
Checking the Switch LEDs 5-12
Checking Console Messages 5-12
Testing Twisted-Pair Cabling 5-13
Testing Switch-to-Device Network Communications 5-13
Testing End-to-End Network Communications 5-13
Restoring the Factory Default Configuration 5-14
Downloading New Software 5-15
HP Customer Support Services 5-15
Before Calling Support 5-15

A Specifications

Physical A-1
Electrical A-1
Environmental A-2
Acoustic A-2
5406R zl2 Switch and its bundles: A-2
5412R zl2 Switch and its bundles: A-2
Safety A-3
Technology Standards and Safety Compliance A-3

B Cabling and Technology Information

Cabling and Technology Information Specifications B-1
Technology Distance Specifications B-3
Mode Conditioning Patch Cord B-6
Installing the Patch Cord B-6
Twisted-Pair Cable/Connector Pin-Outs B-8
Straight-Through Twisted-Pair Cable for 10 Mbps or 100 Mbps Network Connections B-10
Cable Diagram B-10
Pin Assignments B-10
Crossover Twisted-Pair Cable for 10 Mbps or 100 Mbps Network Connection B-12
Cable Diagram B-12
Pin Assignments B-12
Straight-Through Twisted-Pair Cable for 1000 Mbps Network Connections B-14
Cable Diagram B-14
Pin Assignments B-15

C Safety and Regulatory Statements

Safety Information C-1
Informations concernant la sécurité C-2
Hinweise zur Sicherheit C-3
Considerazioni sulla sicurezza C-4
Consideraciones sobre seguridad C-5
Informações de Segurança C-6
Safety Information (Japan) C-7
Safety Information (China) C-8
EMC Regulatory Statements C-9
U.S.A. C-9
Canada C-9
Australia/New Zealand C-9
Japan C-10
Korea C-10
Taiwan C-10

Regulatory Model Identification Number C-10

D Recycle Statements

Waste Electrical and Electronic Equipment (WEEE) Statements D-1

Index

Introducing the HP 5400R zl2 Switches

The HP 5400R zl2 switches include the 5406R zl2 switch, 5412R zl2 switch and their bundles. They are multi-port modular switches that provide Layer 3 routing features, and also low latency for high-speed networking.

This chapter describes your 5400R zl2 switches, including:

- Overview of 5400R zl2 switches, page 1-2
- Network Connectivity, Speeds and Technologies, page 1-7
- Front of the Switches, page 1-8
- Back of the Switch, page 1-19
- Switch Accessories, page 1-22
- Switch Features, page 1-24

Overview of HP 5400R zl2 Switches

HP 5406R zl2 Switches

- The HP 5406R zl2 switch is available as an open 6-slot chassis (J9821A) with Premium Software.
- The HP 5406R-8XGT/8SFP+ (No PSU) v2 zl2 Switch (J9868A) ships with the following:
  - One HP 5406R zl2 Switch (J9821A)
  - One HP 8-port 10GBASE-T v2 zl Module (J9546A)
  - One HP 8-port 10GbE SFP+ v2 zl Module (J9538A)
- The HP 5406R-44G-PoE+/2SFP+ (No PSU) v2 zl2 Switch (J9823A) ships with the following:
  - One HP 5406R zl2 Switch (J9821A)
  - One HP 20-port Gig-T PoE+ / 2-port 10GbE SFP+ v2 zl Module (J9536A)
  - One HP 24-port Gig-T PoE+ v2 zl Module (J9534A)
- The HP 5406R-44G-PoE+/4SFP (No PSU) v2 zl2 Switch (J9824A) ships with the 5406R zl2 6-slot chassis (J9642A) and the following:
  - One HP 5406R zl2 Switch (J9821A)
  - One HP 20-port Gig-T PoE+ / 4-port SFP v2 zl Module (J9535A)
  - One HP 24-port Gig-T PoE+ v2 zl Module (J9534A)
- The HP 5412R-92G-PoE+-4XG v3 zl2 Switch (JL001A) ships with the following:
  - One HP 5412R zl2 Switch (J9822A)
  - Three HP 24p 10/100/1000BASE-T PoE+ v3 zl2 Mod (J9986A)
  - One HP 20p PoE+ / 4p SFP+ v3 zl2 Mod (J9990A)
- The HP 5406R 8p10GT 8pSFP+ v3 zl2 Switch (JL002A) ships with the following:
  - One HP 5406R zl2 Switch (J9821A)
  - One HP 8p 1/HP 2.5/5/XGT PoE+ v3 zl2 Mod (J9995A)
  - One HP 8p 1G/10GbE SFP+ v3 zl2 Mod (J9993A)

- The HP 5406R 8p1PoE0GT 8pSFP+ v3 zl2 Switch (JL003A) ships with the following:
  - One HP 5406R zl2 Switch (J9821A)
  - One HP 24p 10/100/1000BASE-T PoE+ v3 zl2 Mod (J9986A)
  - One HP 20p + / 4p SFP+ v3 zl2 Mod (J9990A)
- The HP 5406R 8p10GT 8pSFP+ v3 zl2 Switch (JL095A) ships with the following:
  - One HP 5406R zl2 Switch (J9821A)
  - Two HP 8p 1G/10GbE SFP+ v3 zl2 Mod (J9993A)

You must order the power supplies separately for these bundles.

HP 5412R zl2 Switches

- The HP 5412R zl2 switch is available as an open 12-slot chassis (J9822A) with Premium Software.
- The HP 5412R-92G-PoE+/2SFP+ (No PSU) v2 zl2 Switch (J9825A) ships with the 5412R 12 slot chassis with Premium Software and the following:
  - One HP 20-port Gig-T PoE+ / 2-port 10GbE SFP+ v2 zl Module (J9536A)
  - Three HP 24-port Gig-T PoE+ v2 zl Module (J9534A)
- The HP 5412R-92G-PoE+/4SFP (No PSU) v2 zl2 Switch (J9826A) ships with the 5412R zl2 12-slot chassis with Premium Software and the following:
  - One HP 20-port Gig-T PoE+ / 4-port SFP v2 zl Module (J9535A)
  - Three HP 24-port Gig-T PoE+ v2 zl Module (J9534A)

See “Switch Accessories” on page 1-22 for a list of the switch modules that can be installed in the HP 5400R zl2 switches.

HP 5406R zl2 Switch

The HP 5406R zl2 switch ships with the 5400R zl2 Management Module and open, 6-slot chassis (J9821A). The switch needs at least one power supply to operate. The 5406R zl2 switch bundles are not shown.

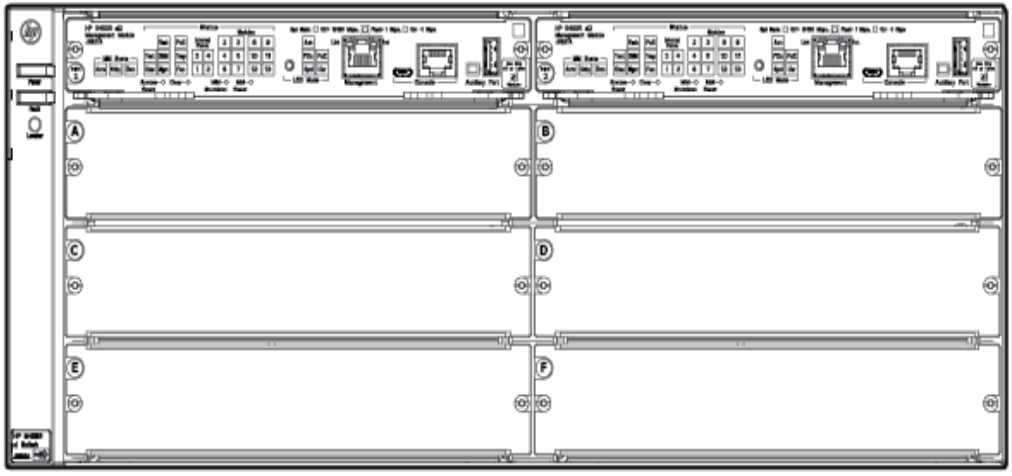

Figure 1-1. HP 5406R zl2 Switch (J9821A)

HP 5412R zl2 Switch

The HP 5412R zl2 switch ships with the 5400R zl2 Management Module and open, 12-slot chassis (J9822A). It does not ship with any power supplies. The switch needs at least one power supply to operate. The 5412R zl2 switch bundles are not shown.

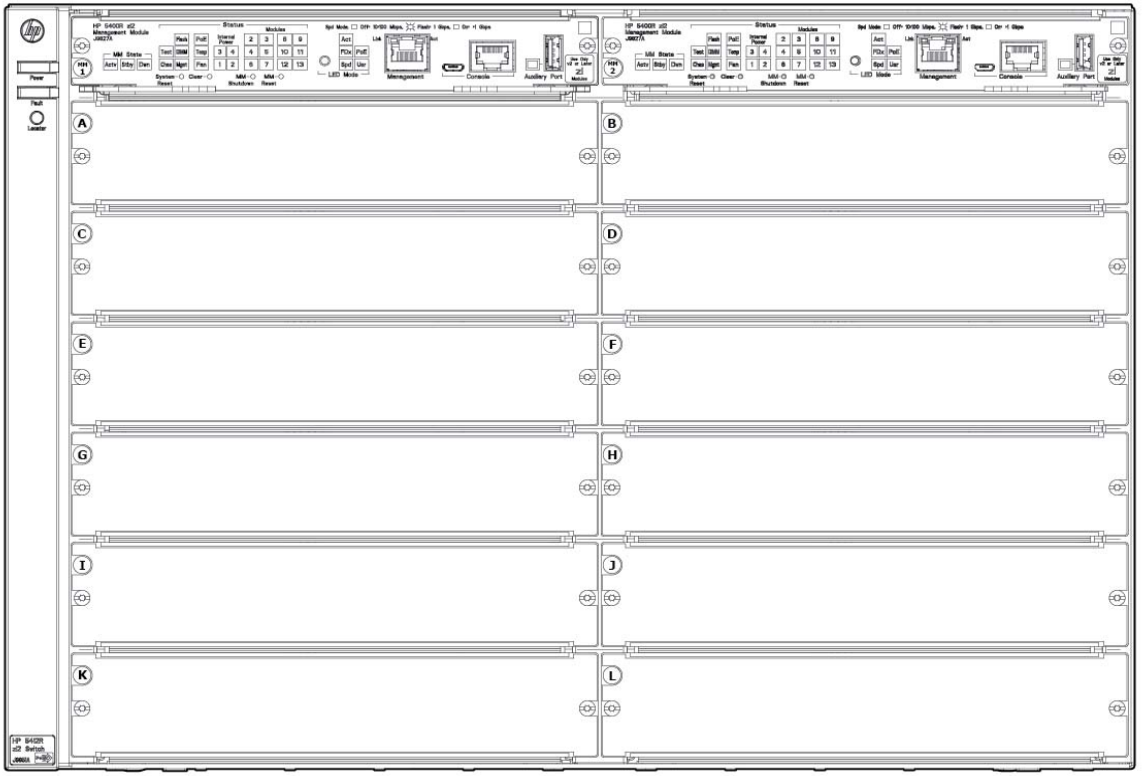

Figure 1-2. HP 5412R zl2 Switch (J9822A)

Network Connectivity, Speeds and Technologies

These products support optional network connectivity as follows:

Table 1-1. Optional Network Connectivity, Speeds and Technologies

			Transceiver Form-Factor and Connector[1]			
Speed	**Technology**	**Cabling**	**SFP Connector**	**X2 Connector**	**SFP+ Connector**	**QSFP+ Connector**
100 Mbps	100-FX	Fiber (multimode)	LC			
	100-BX	Fiber (single mode)	LC			
1 Gbps	1000-T	Copper (twisted-pair)	RJ-45			
	1000-SX	Fiber (multimode)	LC			
	1000-LX	Fiber (multimode or single mode)	LC			
	1000-LH	Fiber (single mode)	LC			
	1000-BX	Fiber (single mode)	LC			
10 Gbps	10-Gig CX4	Copper (twinaxial)		CX4		
	10-Gig Direct Attach	Copper (twinaxial)			Not Applicable	
	10-Gig SR	Fiber (multimode)		SC	LC	
	10-Gig LRM	Fiber (multimode)		SC	LC	
	10-Gig LR	Fiber (single mode)		SC	LC	
	10-Gig ER	Fiber (single mode)		SC	LC	
40 Gbps	40-Gig SR4	Fiber (multimode)				MPO
	40-Gig ESR4	Fiber (multimode)				MPO
	40-Gig LR4	Fiber (single mode)				LC

Table 1-1. Optional Network Connectivity, Speeds and Technologies

[1] For supported transceivers, visit **www.hp.com/networking/support**.
- In the first textbox, type **J4858** (for 100-Mb and Gigabit information), or **J8436** (for 10-Gigabit information).
- Select any of the products that display in the dropdown list.
- Select **Product support information**. Then click on **Manuals** and find the **Transceiver Support Matrix**.

For technical details of cabling and technologies see "Cabling and Technology Information" in the appendices.

Front of the Switch

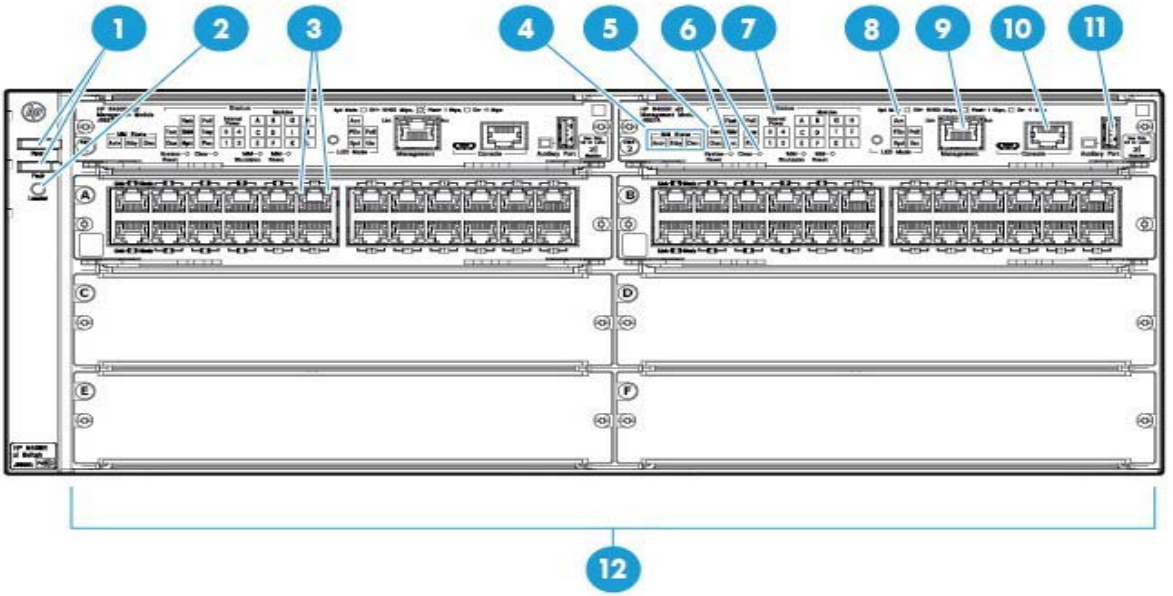

Figure 1-3. Front of 5406R zl2 Switch

Sl No	Label
1	Power and Fault LEDs
2	Locator LED
3	Module Link and Mode LEDs
4	MM Status LEDs

Sl No	Label
5	Status LEDs
6	Reset and Clear buttons
7	Status LEDs for the Fans, Power Supplies, and Switch Modules
8	LED Mode Select button and indicator LEDs
9	OOBM Port
10	Console Port
11	Auxiliary Port
12	Switch Modules and slots with Link and Mode LEDs for each port located on each module

This illustration shows the 5406R zl2 Switch, but the labeling and descriptions apply to all of the HP 5400R zl2 switches.

For more information on HP Smart Rate port LEDs and 40G ports, see *HP Switch v3 zl2 module installation guide.*

LEDs

As described in the next two tables, there are LEDs on the switch chassis and on the switch modules that keep you informed of the status of the switch and the network connections.

Table 1-2. Switch Chassis LEDs

LEDs	State	Meaning
Power (green)	On	The switch is receiving power.
	Off	The switch is NOT receiving power.
Fault (orange)	Off	The normal state; indicates that there are no fault conditions on the switch.
	Blinking[1]	A fault has occurred on the switch, one of the switch modules, an individual port, a power supply, or a fan. The Status LED for the module or other device with the fault will flash simultaneously.
	On	On briefly at the beginning of switch self test after the switch is powered on or reset. If on for a prolonged time, the switch has encountered a fatal hardware failure, or has failed its self test. See chapter 4, "Troubleshooting" for more information.
Locator (blue)	On Blinking Off	The Locator LED is used to locate a specific chassis in a area full of chassis. The LED can be set to be on solid or blink for a specified number of minutes (1-1440). The default is 30 minutes. Use the command "chassislocate".
Test (green/Orange)	Off	The normal operational state; the switch is not undergoing self test.
	On Green	The switch self test and initialization are in progress after you have power cycled or reset the switch. The switch is not operational until this LED goes off. The Self Test LED also comes on briefly when you "hot swap" a module into the switch and the module is automatically self tested.
	Blinking Orange[1]	A component of the switch has failed its self test. The Status LED for that component, for example a switch module, and the switch Fault LED will flash simultaneously.
DIMM (green/Orange)	On	DIMM status is known and fault free.
	Off	DIMM status is unknown.
	Blinking Orange[1]	If DIMM, Fault, and Self Test LEDs are blinking, DIMM failed self-test. If DIMM and Fault LEDs are blinking, an operational fault has occurred. If fast blinking (400ms On and 400ms Off), an operational alert occurred and is unresolved.
Chas (green)/Orange	On	Chassis is functioning normally.
	Blinking Orange	If the Chassis backplane has a fault, or the fan tray has been removed, or if there are multiple fan failures.
Flash (green/Orange)	On	Flash Card status is known and fault free
	Off	Flash Card status is unknown.

LEDs	State	Meaning
	Blinking Orange[1]	If Flash, Fault, and Self Test LEDs are blinking, Secure digital card failed self-test. If Flash and Fault LEDs are blinking, an operational fault has occurred. If fast blinking (400ms On and 400ms Off), an operational alert occurred and is unresolved (for example, the Secure digital is not present).
Mgmt (green/Orange)	On Off Blinking Orange[1]	A Management module is present and fault free. The switch is powered off. There is a fault on the Management module.
PoE (green/Orange)	On Off Slow Blinking Orange[1] Fast Blinking Orange[2]	If any PoE modules are installed. If no PoE modules are installed. Internal PoE fault. External load fault or denied PoE power.
Temp (green/Orange)	Off Blinking Orange[1]	Switch temperature is normal. An over temperature condition has been detected.
Fan (green/Orange)	On Blinking Orange[1]	The cooling fans are operating normally. One or more of the cooling fans have failed. The switch Fault LED will be blinking simultaneously.
Internal Power (green/Orange - numbers corresponding to the power supply positions)	On Off Blinking Orange[1]	A power supply is installed in the position in the back of the switch corresponding to the number, and the supply is plugged in to an active AC power source. A power supply is not installed in the position corresponding to the number. The power supply installed in the position corresponding to the number is not plugged in to an active AC power source, or has experienced a fault. The switch Fault LED will be blinking simultaneously.
System Reset Button	Single press (0.2 - 5 seconds)	Full chassis system is reset, without failover.
MM Shutdown/ Reset Button	Single press (0.2 - 5 seconds)	Management Module shuts down. If a standby management module is present, failover occurs. If there is no standby management module, the system reset occurs.

LEDs	State	Meaning
Modules (green - letters corresponding to the switch module slots)	On	A module is installed in the switch module slot corresponding to the letter and the module is undergoing or has passed self test. This also occurs when you install a module when the switch is already powered on ("hot swap").
	Off	A module is not installed in the switch module slot corresponding to the letter.
	Blinking[1]	The module status LED flashes very briefly when a module is being hot swapped. If the LED flashes for a prolonged time, the module in the slot corresponding to the letter has failed self test or encountered some other fault condition. See chapter 4, "Troubleshooting" for a more information.
In PoE Mode:	On	PoE is ok for this slot.
	Blinking[1]	PoE internal fault for this slot.
	Blinking[2]	PoE load fault or insufficient power for this slot.
	Off	The module in this slot is not a PoE module.
LED Mode Select (5 green LEDs)	Act	Indicates that the port Mode LEDs are displaying network activity information.
	FDx	Indicates that the port Mode LEDs are lit for ports that are in Full Duplex Mode.
	PoE	Indicates which ports are supplying PoE power. • If the Mode LED is on the port is providing PoE power. • If the Mode LED is off the port is not providing PoE power. • If the Link LED is on the port is enabled for PoE. • If the Link LED is off the port is disabled for PoE. • If the Link LED is blinking Orange, the port has an error or the port is denied power due to insufficient power.
	Spd	Indicates the Port LEDs are displaying the connection speed at which each port is operating: • if the Port LED is off, the port is operating at 10 Mbps or at 100 Mbps • if the Port LED is blinking, the port is operating at 1 Gbps • if the Port LED is on continuously, the port is operating at 10 Gbps
	Usr	Reserved for future development
Auxiliary (green/ orange) For more information see the Management and Configuration Guide for your switch.	Blinking green[1]	Indicates the switch is processing a USB command file.
	On green	The switch has successfully finished processing the USB command file.
	Blinking Orange[2]	Indicates an error condition.
	Off	Indicates that no USB device has been inserted, or that the inserted USB device cannot be recognized, or that no command file can be found on the inserted USB device.

LEDs	State	Meaning
MM State	Active	Indicates that this is the Active management module when one or two management modules are installed in the switch.
	Standby	Indicates that this is the Standby management module when two management modules are installed in the switch.
	Down	Indicates that this management Module has been shut down via the Module Shutdown switch or via a CLI command.

[1] The blinking behavior is an on/off cycle once every 1.6 seconds, approximately.
[2] The blinking behavior is an on/off cycle once every 0.5 seconds, approximately.

Table 1-3. Switch Module LEDs

These LEDs are located on the modules themselves, one pair for each port.

LED	State	Meaning
Link	On	Indicates the port is enabled and receiving a link beat signal (for the twisted-pair ports), or a strong enough light level (for the fiber-optic ports) from the connected device.
	Off	One of these conditions exists: • no active network cable is connected to the port • the port is not receiving link beat or sufficient light • the port has been disabled through the switch console, the web browser interface, Intelligent Management Center, or other network management tool.
	Blinking Orange[1]	The port has failed self test. The switch Fault, Self Test LEDs, and appropriate module status LEDs will flash simultaneously.
Mode	Depending on the mode selected, displays the following: network activity information, whether the port is configured for Full Duplex operation, maximum speed operation, or whether PoE power is being supplied or not. See "LED Mode Select Button and Indicator LEDs" below for more information.	

[1] The blinking behavior is an on/off cycle once every 1.6 seconds, approximately.

For more information on HP Smart Rate port LEDs and 40G ports, see *HP Switch v3 zl2 module installation guide*.

LED Mode Select Button and Indicator LEDs

To optimize the amount of information that can be displayed for each of the switch ports, the 5400R zl2 switches use a Mode LED for each port. The operation of this LED is controlled by the LED Mode Select button on the switch chassis, and the current selection is indicated by the mode indicator LEDs near the button. Press the button to change from one mode to the next.

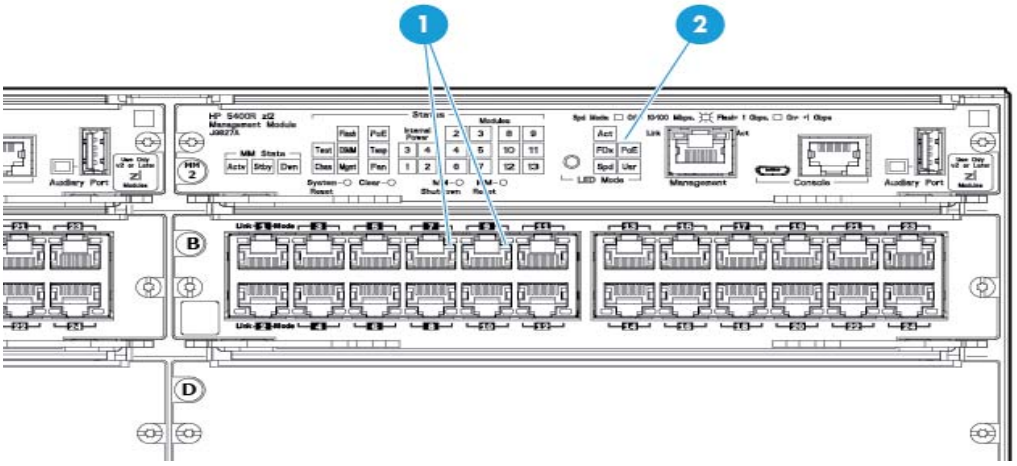

Figure 1-4. Mode LEDs and LED Mode Select Button

1	Mode LEDs (one for each port)
2	LED Mode Select button and indicator LEDs

- If the Activity **Act** indicator LED is lit, each port Mode LED displays activity information for the port—it flickers faster for the higher traffic rates.
- If the Full Duplex **FDx** indicator LED is lit, the port Mode LEDs light for those ports that are operating in full duplex.
- If the speed indicator LED is lit, the port LEDs behave as follows to indicate the connection speed for the port:
  - Off = 10 Mbps or 100 Mbps
  - Blinking = 1 Gbps (the blinking behavior is a repeated on/off cycle once every 0.5 sec.)
  - On = Faster than 1 Gbps

For 10/100/1000BASE-T, SFP and SFP+ Ports:

- Off = 10 Mbps or 100 Mbps
- Flashing = 1 Gbps
- On = >1Gbps

For HP Smart Rate ports:

- Off = Not linked
- Slow Flash = 1 Gbps
- Double Flash = 2.5 Gbps
- Triple Flash = 5 Gbps
- On = 10 Gbps

For QSFP+ ports:

- Off = Not linked
- Fast Flash = 40 Gbps

For more information on HP Smart Rate port LEDs and 40G ports in speed mode, see *HP Switch v3 zl2 module installation guide*.

- If the PoE PoE indicator LED is lit, the Link and Mode LEDs indicate PoE status:
  Link LED:
  - On = PoE is enabled on this port
  - Off = PoE is disabled on this port.
  - Slow Blinking Orange = Internal PoE fault on this port.
  - Fast Blinking Orange = This port is denied PoE power or has an external load fault.

  Mode LED:
  - On = PoE power is be supplied on this port
  - Off = PoE is not being supplied on this port.

Console Port

There are two console ports on the switch. These ports are used to connect a console to the switch. The one port uses the serial cable supplied with the switch and the other port uses a MicroUSB cable which is not supplied with the switch. This connection is described under “Connecting a Console to the Switch” in chapter 2, “Installing the 5400R zl2 Switches”. The console is a full-featured interface that can be used to configure, monitor, and troubleshoot the switch. It can be run on a PC, laptop, or handheld device emulating a VT-100 terminal, or on a standard VT-100 terminal.

Out-of-Band Management (OOBM) Port

This RJ-45 port is used to connect a dedicated management network to the switch.

To use: connect an RJ-45 network cable to the Management port to manage an HP 5400R zl2 Switch through Telnet from a remote PC or a UNIX workstation.

To use this port, the switch must have an IP address. IP settings can be configured through a Console port connection or automatically from a DHCP/Bootp server.

A networked out-of-band connection through the Management port allows you to manage data network switches from a physically and logically separate management network.

For more information, see the "Network Out-of-Band Management (OOBM)" appendix in the *Management and Configuration Guide* at: www.hp.com/networking/support.

System Reset Button

This button will reset the entire switch, including the second management module, when powered on. This action clears any temporary error conditions that may have occurred, executes the switch self test, and resets all network activity counters to zero. The counters are displayed in the switch console interface, the switch web browser interface, and through SNMP network management applications, such as Intelligent Management Center.

Press the Reset button also after changing the module type that is installed in any of the switch module slots while the switch is powered on. See “Hot Swapping Switch Modules” on page 2-27.

You can also use the *no module <slot>* command to erase the old module type configuration.

Clear Button

This button is used for the following purposes:

- **Deleting Passwords** - When pressed for at least one second on either one of the Management Modules, the Clear button deletes any switch console access passwords that you may have configured. Use this feature if you have misplaced the password and need console access.

This button is provided for your convenience, but its presence means that if you are concerned with the security of the switch configuration and operation, you should make sure the switch is installed in a secure location, such as a locked wiring closet.

- **Restoring Factory Default Configuration** - When pressed with the Reset button in a specific pattern, the Clear button clears any configuration changes you may have made through the switch console, the web browser interface, or SNMP management, and restores the factory default configuration to the switch. The specific patterns to accomplish the Restore Factory Default Configuration are:
    i. Press both the System Reset and Clear buttons simultaneously.
    ii. Release the System Reset button, but continue to hold the Clear button.
    iii. Release the Clear button immediately when you see the Test LED begins to flash on both the Management Modules.

For the specific method to restore the factory default configuration, see "Restoring the Factory Default Configuration" in chapter 4, "Troubleshooting" of this manual.

MM Shutdown Button

When you want to remove a module, the MM shutdown button halts all the management functions. It will not reboot when this button is pressed.

If the system is running with two management modules and the MM shutdown button is pressed on the active module, this causes a failover to the standby module.

If the system is running with two management modules and the MM shutdown button is pressed on the standby module, no failover occurs.

MM Reset Button

The MM reset button resets the Management Module to which it is attached.

If the system is running with two management modules, and if the active module is reset, this causes a failover to the standby module.

If the system is running with two management modules and the on reset is the active, no failover occurs.

When a user presses the reset button, the module will be reset and will reboot.

If the system is running with two management modules and the MM shutdown button is pressed on the standby module, no failover occurs.

Back of the Switch

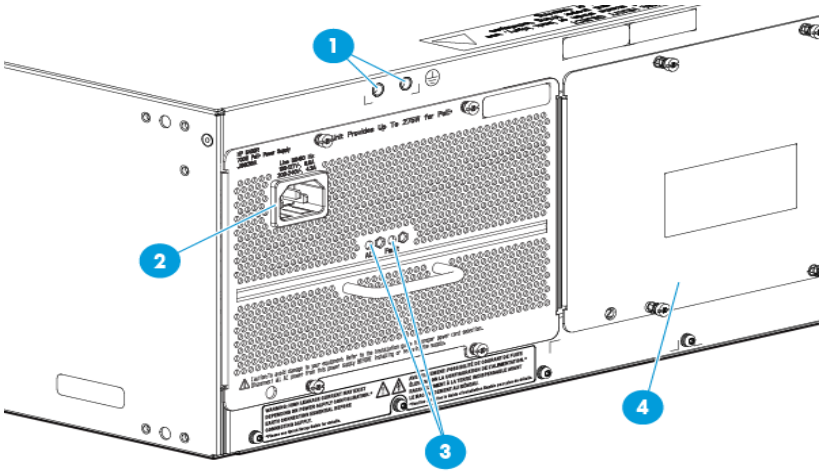

Figure 1-5. Back of a 5406R zl2 switch with one power supply

1	Ground lug mounting holes
2	AC power connector
3	Power and Fault LEDs
4	Slot for installing optional redundant power supply

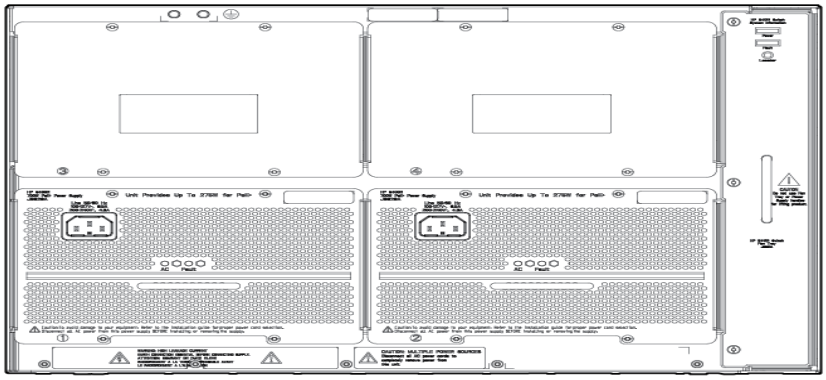

Figure 1-6. Back of a 5412R zl2 switch with two power supplies

Power Connector

The Series 5400R zl2 Switches do not have a power switch; they are powered on when connected to an active AC power source.

The 5400R zl2 switches automatically adjust to any voltage between 100-127 volts or 200-240 volts when using the J9828A power supply, 110-127 volts or 200-240 volts when using the J9829A power supply, and 115-127 volts and 200-240 volts when using the J9830A power supply, and either 50 or 60 Hz. There are no voltage range settings required.

Redundant Power Supply

Load-sharing redundant power supplies J9828A, max 630W, system power (12V), 275W of POE power; J9829A, 630W max system (12V) power, 900W max POE power; J9830A, 630W max, system (12V) power, 2500W max POE power can be installed in the back of the 5400R zl2 switches. To provide redundancy, each power supply should be connected to different AC power sources. Then, if one AC power source fails, the switch will continue to run.

Note

Any combination of J9828A, J9829A and J9830A power supplies can be used in the same switch. However, HP recommends to only use like supplies in a unit for more deterministic behavior in event of a power supply failure.

Caution

The switch redundant power supply *is* hot swappable, but, as indicated by the caution statement on the power supply, it ***must*** be disconnected from AC power before being installed or removed.

CAUTION:
- **Refer to the installation guide for proper power cord selection**
- **Disconnect AC power from the power supply BEFORE installing or removing the supply. Otherwise, damage to the equipment may result.**

Because the switch can run on a single supply, removing a redundant supply will not interrupt switch operation. However, with a single power supply system will power on Interface module up to 630W. The rest of the Interface modules are powered on the priority of the slot. The slot A has the highest priority and the slot L has the lowest priority.

When power is restored from a second (or more) power supplies, a system reload or interface module reset is not required to restore operation to slots G-L. The 5400R modules will restart by themselves when power recovers.

To reset the interface modules, pull each module out about half way and then re-seat them. Do this for each module in slots G-L. For more information regarding power see the:

- *HP Switch v2 zl Internal Power Supplies Installation Guide.*
- *HP Power over Ethernet (PoE/PoE+) Devices Planning and Implementation Guide.*

Switch Accessories

Accessories of the 5400R zl2 switches include a 6 or 12-slot chassis for installing any of the available v2 zl or v3 zl2 Modules. The supported v2 zl or v3 zl2 modules include:

- HP 5406R zl2 Switch
- HP 5412R zl2 Switch
- HP 5406R-44G-PoE+/2SFP+ (No PSU) v2 zl2 Switch
- HP 5406R-44G-PoE+/4SFP (No PSU) v2 zl2 Switch
- HP 5412R-92G-PoE+/2SFP+ (No PSU) v2 zl2 Switch
- HP 5412R-92G-PoE+/4SFP (No PSU) v2 zl2 Switch
- HP 5406R-8XGT/8SFP+ (No PSU) v2 zl2 Switch
- HP 5400R zl2 Management Module
- HP 5400R 700W PoE+ zl2 Power Supply
- HP 5400R 1100W PoE+ zl2 Power Supply
- HP 5400R 2750W PoE+ zl2 Power Supply
- HP 5406R zl2 Switch Fan Tray
- HP 5412R zl2 Switch Fan Tray
- HP 5406R zl2 Switch
- HP 5412R zl2 Switch
- HP X450 4U/7U Universal 4-Post Rack Mounting Kit
- HP 5412R 92GT PoE+ / 4SFP+ (No PSU) v3 zl2 Switch (JL001A)
- HP 5406R 8-port 1/2.5/5/10GBASE-T PoE+ / 8-port SFP+ (No PSU) v3 zl2 Switch (JL002A)
- HP 5406R 44GT PoE+ / 4SFP+ (No PSU) v3 zl2 Switch (JL003A)
- HP 5406R 16-port SFP+ (No PSU) v3 zl2 Switch (JL095A)
- 24-port Gig-T PoE+ v2 zl Module (J9534A)
- 20-port Gig-T PoE+ / 4-port SFP v2 zl Module (J9535A)
- 20-port Gig-T PoE+ / 2-port 10GbE SFP+ v2 zl Module (J9536A)
- 24-port SFP v2 zl Module (J9537A)
- 8-port 10GbE SFP+ v2 zl Module (J9538A)
- 8-port 10GBase-T v2 zl Module (J9546A)
- 24-Port 10/100 PoE+ v2 zl Module (9547A)
- 20-port Gig-T / 2-port 10-GbE SFP+ v2 zl Module (J9548A)

- 20-port Gig-T / 4-port SFP v2 zl Module (J9549A)
- 24-port Gig-T v2 zl Module (J9550A)
- 12-port Gig-T / 12-port SFP v2 zl Module (J9637A)
- HP MSM775 zl Premium Controller Module (J8940A)
- HP Advanced Services v2 zl Module with HDD (J9857A)
- HP Advanced Services v2 zl Module with SSD (J9858A)
- HP 24p 10/100/1000BASE-T PoE+ v3 zl2 Mod (J9986A)
- HP 24p 10/100/1000BASE-T v3 zl2 Mod (J9987A)
- HP 24p 1GbE SFP v3 zl2 Mod (J9988A)
- HP 12p PoE+ / 12p 1GbE SFP v3 zl2 Mod (J9989A)
- HP 20p PoE+ / 4p SFP+ v3 zl2 Mod (J9990A)
- HP 20p PoE+ / 4p 1/2.5/5/XGT v3 zl2 Mod (J9991A)
- HP 20p PoE+ / 1p 40GbE QSFP+ v3 zl2 Mod (J9992A)
- HP 8p 1G/10GbE SFP+ v3 zl2 Mod (J9993A)
- HP 8p 1/HP 2.5/5/XGT PoE+ v3 zl2 Mod (J9995A)

Note

For detailed information about the v2 zl modules, see the *HP Switch v2 zl Modules Installation Guide*.

For detailed information about the v3 zl2 modules, see the *HP Switch v3 zl2 Modules Installation Guide*.

For detailed information about PoE and PoE+ devices, see the *HP PoE/PoE+ (Power over Ethernet) Devices Planning and Implementation Guide*.

To view or download this guide, visit **www.hp.com/networking/support**.

Switch Features

The features of the 5400R zl2 switches include:

- Modules can be installed in any order and in any combination and can the "hot swapped"
- Supported transceivers can be hot swapped
- High performance - The 5406R zl2 Switch has a routing/switching capacity of 496.8 Gbps, with a switch fabric speed of 561.6 Gbps and a throughput of 396 Mbps, and the 5412R zl2 Switch has a routing/switching capacity of 993.6 Gbps, with a switch fabric speed of 1123.2 Gbps and a throughput of 792 Mbps
- Plug-and-play networking - all ports are enabled—just connect the network cables to active network devices and your switched network is operational
- Automatic learning of the network addresses in the switch's 16,000-address forwarding table, with configurable address aging value
- Full-duplex operation available on all ports
- Easy management of the switch through several available interfaces:
  - web browser interface - an easy to use built-in graphical interface that can be accessed from common web browsers
  - console interface - a full featured, easy to use, VT-100 terminal interface for out-of-band switch management, or for TELNET access to the switch. The console includes complete switch management through a command line interface (CLI) and a slightly reduced feature set accessible through an intuitive menu interface
  - Intelligent Management Center - a SOA based HP Network management application that accurately discovers and displays your switch on network maps and provides a graphical interface for configuring and monitoring your switch
- Support for the Spanning Tree Protocol to eliminate network loops
- Support for up to 2048 IEEE 802.1Q-compliant VLANs so you can divide the attached end nodes into logical groupings that fit your business needs
- Layer 3 routing functionality:
  - Static IP routing - provides manually configured routing for both IPv4 and IPv6 networks

  - Routing Information Protocol (RIP) - provides RIPv1 and RIPv2 routing
  - OSPF - provides OSPFv2 for IPv4 routing and OSPFv3 for IPv6 routing
  - Policy-based routing - uses a classifier to select traffic that can be forwarded based on policy set by the network administrator.
  - Border Gateway Protocol (BGP) - provides IPv4 Border Gateway Protocol routing, which is scalable, robust, and flexible
- Support for many other advanced features to enhance network performance, security, and control - for a description, see the *Management and Configuration Guide* which is on the HP networking Web site.
- Support for IEEE 802.3af standard, IEEE 802.3at standard, and pre-standard PoE devices.
- Supports dual management module capability.
- Supports 100% POE+ capacity at low line
- Supports existing v2 zl and v3 zl2 modules
- Support for three new Power Supplies
  - BPSU (Base Power Supply unit - J9828A): Lower cost alternative
  - LPSU (Low Power Supply unit - J9829A)
    - Dual-output 12V and 54V, with one C16 power receptacle
    - For support of mid-range POE/POE+ installations
  - HPSU (High Power Supply Unit - J9830A)
    - Dual-output 12V and 54V, with two C20 power receptacle
    - For support of maximum POE/POE+ installations
- Support for Trusted Platform Module (TPM) subsystem for storing certificates and secure identity

Installing the HP 5400R zl2 Switches

The HP 5400R zl2 switches come with an accessory kit that includes the brackets for mounting the switch in a standard 19-inch telco rack, or in an equipment cabinet. The switches have rubber feet already attached so they can be securely located on a horizontal surface. This chapter shows you how to install your HP 5400R zl2 switches.

Included Parts

The 5400R zl2 switches have the following components shipped with them:

- HP 5400R zl2 Switch Quick Setup Guide and Safety/Regulatory Information
- HP Switches General Safety and Regulatory Information
- One HP 5400R zl2 Management Module (J9827A)
- One HP 5406R zl2 Switch Fan Tray (J9831A) or HP 5412R zl2 Switch Fan Tray (J9832A)
- One HP 5406R zl2 Switch Rack Mounting Kit (5066-3042) or HP 5412R zl2 Switch Rack Mounting Kit (5066-3043)
- Cable Manager Kit (5189-8716)

Note

Power Supplies are not included with the HP 5400R zl2 Switches. They are to be ordered separately. Each of the 5406R switches come with two power supply slots and the 5412R switches come with four power supply slots. Three different power supplies are available to be used with the switches: J9828A, J9829A, and J9830A.

Switch Accessories

Included Accessories with 5406R zl2 Switch	Included Accessories with HP 5412R zl2 Switch
One HP 5400R zl2 Management Module (J9827A)	One HP 5400R zl2 Management Module (J9827A)
One HP 5406R zl2 Switch Fan Tray (J9831A)	One HP 5412R zl2 Switch Fan Tray (J9832A)

Power Cords

Power cord, use one of the following according to the country of usage:

Country/Region	J9830A Power Supply Cable
Australia/New Zealand	8121-1550
China	8121-1551
Mainland Europe/South Korea	8121-1554
India	8121-1074
Japan/Thailand	8121-1555[1]
Denmark/Switzerland	8121-1287
United Kingdom/Hong Kong/Singapore/ Malaysia	8121-1549
United States/Canada 125V	8121-1553
South Africa	8121-1552
Taiwan/USA 250V	8120-6362[2]
Israel	8121-1010
Argentina	8121-0925
Brazil	8121-1101
Chile	8121-0923

Country/Region	J9829A Power Supply Cable
Australia	8121-1476
China	8121-1484
Europe/South Korea	8121-1479
Japan	8120-5338
Thailand/Philippines	8121-1485
Denmark	8121-1486
Switzerland	8121-1480
United Kingdom/Hong Kong/Singapore/ Malaysia	8121-1475
South Africa/India	8121-1483
Taiwan	8121-1511
Israel	8121-1478
Argentina	8121-1481
Brazil	8121-1474
Chile	8121-1477
North America 110V	8121-0914

Country/Region	J9828A Power Supply Cable
Australia	8121-0834
China	8120-8707
Europe/South Korea	8120-6811
Japan	8120-4753
Thailand/Philippines	8121-0668
India	8121-0780
Denmark	8120-6814
Switzerland	8120-6815
United Kingdom/Hong Kong/Singapore/ Malaysia	8120-6809
South Africa	8120-6813
Taiwan	8121-0974
Israel	8121-1035
Argentina	8120-6869
Brazil	8121-1069
Chile	8120-6980
USA/Canada	8121-0914

[1] Japan: NEMA 6-20P, 200V.

[2] Taiwan/U.S.A. 250V: NEMA L6-20P, 250V

Japan Power Cord Warning

製品には、同梱された電源コードをお使い下さい。
同梱された電源コードは、他の製品では使用出来ません。

Installation Procedures

Summary

Follow these easy steps to install your switch. The rest of this chapter provides details on these steps.

1. **Prepare the installation site (**page 2-8**).** Make sure the physical environment into which you will be installing the switch is properly prepared including having the correct network cabling ready to connect to the switch, and having a good location for the switch. See page 2-7 for some installation precautions.
2. **Install switch modules (**page 2-8**).** The 5400R zl2 switches have six or 12 universal slots for installing any of the HP Switch v2 zl or v3 zl2 modules. Some of the 5406R zl2 and 5412R zl2 switches come with preinstalled modules. Depending on where you will install your 5400R zl2 switch, it may be easier to install the modules first. The modules are "hot swappable" though, so they can also be installed and removed after the switch is powered on.

Note

Make sure you use only HP Switch v2 zl or v3 zl2 Modules in your 5400R zl2 switches. HP switch vl zl modules are not supported.

3. **Install power supplies (**page 2-12**).** The 5406R zl2 and 5412R zl2 switches supports up to two power supplies. It may be easier to install the power supplies after mounting the switch. The switch must have at least one power supply to operate.
4. **Verify the switch passes self test (**page 2-14**).** This is a simple process of plugging the switch into a power source and observing that the LEDs on the switch's front panel and on the modules show correct operation. It may be easier to verify if the switch passes self test before mounting the switch.
5. **Mount the switch (**page 2-16**).** The 5400R zl2 switches can be mounted in a 19-inch telco rack, in an equipment cabinet, or on a horizontal surface. An optional HP X450 4U/7U Universal 4-Post Rack Mounting Kit (J9852A) is available for mounting 5400R zl2 switches in a cabinet. However, if you want to ship in a cabinet or rack, its recommended to use the 4-post kit in a HP rack. See the installation details for more information.
6. **Install the Grounding Wire** (page 2-20). If a grounding wire is to be attached to the switch chassis, the grounding lug must be removed and a wire crimped to it and the grounding lug must be reinstalled.

7. **Connect the switch to a power source (**page 2-21**).** Once the switch is mounted, plug it in to the nearby main power source.
8. **Connect the network devices (**page 2-22**).** Using the appropriate network cables, connect other switches, hubs, routers, computers, servers, printers, and other network devices to the switch ports. For more information, see "Connect the Network Devices" on page 2-22.

Note

The 10/100/1000-T ports on the v2 zl or v3 zl2 Modules comply with IEEE 802.3x standard which includes the **Auto MDI/MDI-X** feature. This feature allows you to use *straight-through* twisted-pair cable for all of your twisted-pair network connections.

9. **Connect a console to the switch (optional—**page 2-23**).** You may wish to modify the switch's configuration, for example, to configure an IP address so it can be managed using a web browser or from an SNMP network management station. Configuration changes can be made easily through the switch's console interface.

At this point, the switch is fully installed. See the rest of this chapter if you need more detailed information on any of these installation steps.

Installation Precautions

Follow these precautions when installing your 5400R zl2 switch:

WARNING

- **Devices installed in a rack or cabinet should be mounted as low as possible, with the heaviest device at the bottom and progressively lighter devices installed above.**

  The rack or cabinet should be adequately secured to prevent it from becoming unstable and/or falling over.
- **Ensure a cover plate is installed on any empty switch power supply or module slot. A cover plate is required for safe operation, and to ensure proper switch cooling. Never have more than one power supply or module slot uncovered at a time while the switch is powered on.**
- **To avoid energy and mechanical hazards, never allow any part of your body, jewelry, tool, or other foreign object to enter any module or power supply slots.**
- **This unit may have more than one power supply cable. To fully power down the switch, you must disconnect all power supply cables from the unit.**

Installation Precautions (continued)

Cautions

- If the switch is to be shipped in a rack, HP Shock Rack and an HP X4504U/7U Universal 4-Post Rack Mount Kit (J9852A) for each switch.
- Ensure the power source circuits are properly grounded, then use the power cord supplied with the switch to connect it to the power source.
- If your installation requires a different power cord than the one supplied with the switch and power supply, be sure the cord is adequately sized for the switch's current requirements. In addition, be sure to use a power cord displaying the mark of the safety agency that defines the regulations for power cords in your country. The mark is your assurance that the power cord can be used safely with the switch and power supply.
- When installing the switch, note that the AC outlet should be near the switch and should be easily accessible in case the switch must be powered off.
- Ensure the switch does not overload the power circuits, wiring, and over-current protection. Each power supply should be connected to a dedicated branch circuit to prevent tripping building circuit breakers. To determine the possibility of overloading the supply circuits, add together the ampere ratings of all devices installed on the same circuit as the switch and compare the total with the rating limit for the circuit. The maximum ampere ratings are usually printed on the devices near the AC power connectors.
- Do not install the switch in an environment where the operating ambient temperature might exceed 45°C (113°F).
- Allow three to four inches of space around the sides and back of the switch to make sure the air flow for the switch is not restricted.

1. Prepare the Installation Site

Cabling Infrastructure

Ensure the cabling infrastructure meets the necessary network specifications. See Appendix B, "Cabling and Technology Information" on page B-1 for more information.

Installation Location

Before installing the switch, plan its location and orientation relative to other devices and equipment:

- In the front of the switch, allow at least 7.6 cm (3 inches) of space for the twisted-pair and fiber-optic cabling.
- In the back of the switch, allow at least 10.2 cm (4 inches) of space for the power cord and cooling.
- On the sides of the switch, leave at least 7.6 cm (3 inches) for cooling.

2. Install Switch Modules

Install switch modules into the slots as shown in the illustration below. For installation details, see the instructions in the manual that comes with the module.

Caution

Make sure you install only HP Switch v2 zl or v3 zl2 Modules. HP Swtich vl zl modules are not supported.

Avoid any electrostatic discharge problems by handling the modules only by their bulkheads.

The slot cover can be removed, and the module can be installed with either a flat-bladed or Torx T-10 screwdriver. Retain the slot cover for future use.

Module Installation Notes

- Any of the supported Switch v2 zl or v3 zl2 Modules can be installed in any of the slots.

- The modules can be “hot swapped”, installed after the switch is already powered on, and normally will be immediately operational. See “Hot Swapping the Switch Module” on page 2-27.
- **Ensure you fully insert the modules.** That is, press the module into the slot using the extractor handles, until the bulkhead on the module is contacting the front face of the switch chassis.
- Once the module is fully inserted, screw in the two retaining screws to secure the module in place. The screws should be tightened until they are secure, but not overtightened.
- If you do not use one or more of the slots, ensure the slot cover plate is still attached over the slot for safe operation and proper switch cooling. For safety, you should not have more than one module slot uncovered at a time.
- Although these procedures show the 6-slot chassis, the procedures are the same for the 12-slot chassis.

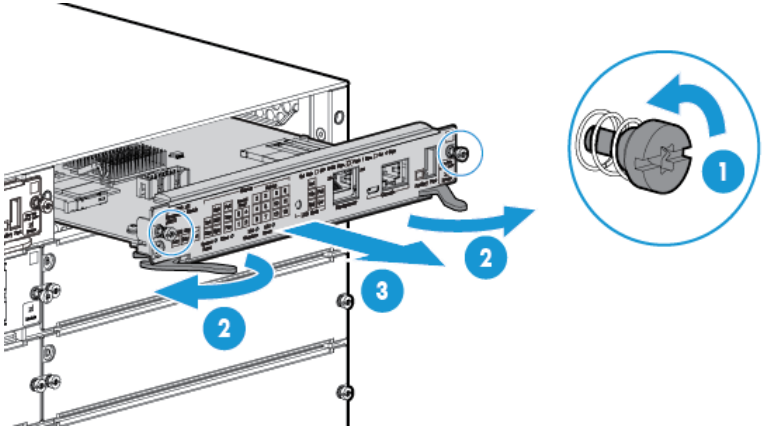

Figure 2-1. Module being installed in a chassis

1	Retaining Screw
2	Open Ejector handle
3	Management Module

Installing a Management Module Battery

The battery on the management module is used to keep time for the internal switch clock. The internal clock will not function properly without a battery.

WARNING

- **The battery requires special handling at end-of-life. The battery can explode or cause burns if disassembled, charged, or exposed to water, fire or high temperature. After replacing the battery, properly dispose of used battery according to instructions.**
- **There is a risk of explosion if the battery is replaced by an incorrect type. Ensure to replace the battery with the same type.**
- **To avoid shorting of battery, remove and properly dispose of battery before returning a Management Module for repair.**

Installing a New Battery.

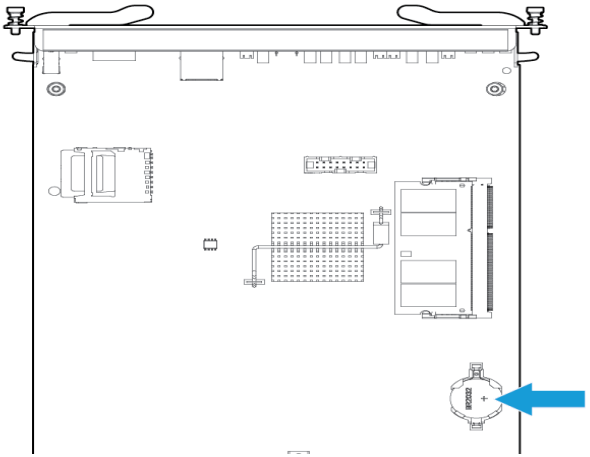

Figure 2-1. Battery location on Management Module

1. Insert the new battery with the lettering and the plus “+” sign facing up.
2. Install the management module into the switch.

ATTENTION

Il y a danger d'explosion s'il y a remplacement incorrect de la batterie.

Remplacer uniquement avec une batterie du même type ou d'un type équivalent recommandé par le constructeur.

Mettre au rebut les batteries usagées conformément aux instructions du fabricant.

Perchlorate Notice. If this product contains a real-time clock battery or coin cell battery it may contain perchlorate and may require special handling when recycled or disposed of in California and other certain states.

Perchlorate material - special handling may apply see:

www.dtsc.ca.gov/hazardouswaste/perchlorate Web site for more information.

3. (Optional) Install Another Power Supply

Caution

The 5400R zl2 switches are designed to provide continuously operating PoE or PoE+ power in the event of a single power supply failure with only a loss of PoE or PoE+ power to lower priority ports.

If more than one power supply fails while the switch is at or near maximum operating power (that is: the sum total of all PoE supply capacity minus the largest supply, see chapter 2 and 4 of the *PoE (Power over Ethernet) Devices* Planning and Implementation Guide) loss of all PoE power may result.

To return PoE power to the ports, without causing the switch to reboot, when there are two or more power supplies still supplying 12V power, unplug the power cord for 5 seconds and re-plug it for each power supply one at a time.

The following are the addition power supplies that can be installed in the back of the 5400R switches. The 5406R zl2 switch can hold up to two power supplies and the 5412R zl2 switch can hold up to four power supplies.

- J9828A: 630W of max power of system 12V power or 275w of max PoE power. Total Max power is 700w.
- J9829A: 630W of max power of system 12V power or 900W of max PoE power. Total Max power is 1100W.
- J9830A (with 2 power cords): 630W of max power of system 12V power or 2500W of max PoE power. Total Max power is 2750W.
- J9830A (with MAIN power cord only): 630W of max power of system 12V power or 1100W of max PoE power. Total Max power is 1400W.

To prevent overloading of the building circuits breakers, the second power supply must be connected to a different AC power source from the other supply. This also helps with redundancy, if one AC power source fails, the switch will continue to run.

Install the second power supply into power slot number 2 as shown in Figure 2-3. Although these procedures show the 6-slot chassis, the procedures are the same for the 12-slot chassis. The slot cover can be removed with either a flat-bladed or Torx T-10 screwdriver. Retain the slot cover for future use.

Note

Any combination of J9828A, J9829A and J9830A power supplies can be used in the same switch. However, HP recommends to only use like supplies in a unit for more deterministic behavior in event of a power supply failure.

Caution

The switch power supplies *are* hot swappable; they can be installed while the switch is receiving power from the supply in the other slot. But, as indicated by the caution statement on the power supply, the supply ***must not be connected*** to AC power before being installed or removed.

CAUTION:
- **Refer to the installation guide for proper power cord selection**
- **Disconnect AC power from the power supply BEFORE installing or removing the supply. Otherwise, damage to the equipment may result.**

For safety and proper switch cooling, if either of the power supply slots are not being used, make sure to attach the cover plate over the slot. Please see the "Installation Precautions" on page 2-7 for more information.

For installation details, see the instructions in the manual that comes with the power supply.

Insert the power supply into the opening, then slide it all the way in until it connects to the switch. The power supply face plate will be flush with the back face of the switch.

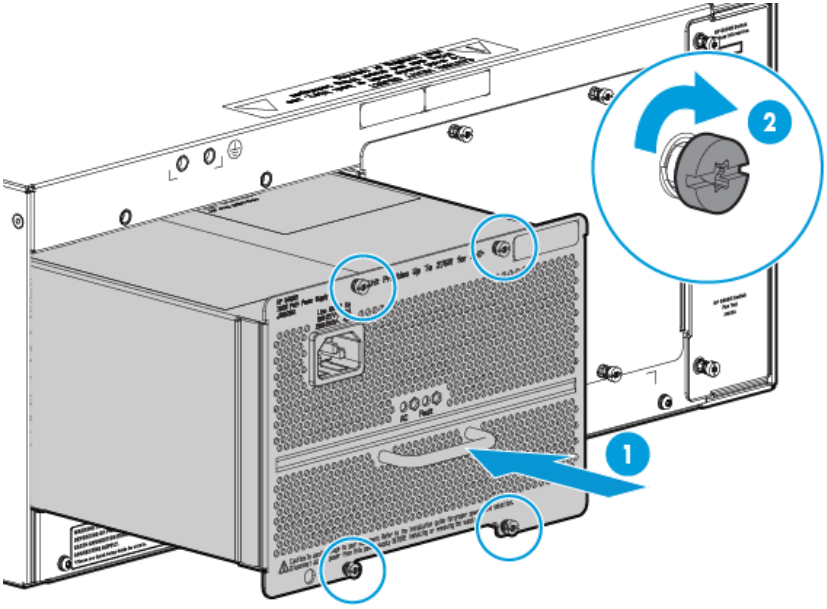

Figure 2-2. Installing a power supply

1	Handle to insert the power supply into the Chassis.
2	Screws

Once the power supply is installed, tighten the four retaining screws that hold it in place. The screws can be tightened with either a flat-bladed or Torx T-10 screwdriver. *Be careful not to overtighten the screws.*

4. Verify the Switch Passes Self Test

After you have installed any modules and the optional second power supply, but before mounting the switch in its network location, you should first verify it is working properly by plugging it into a power source and verifying it passes its self test.

If you have installed a second power supply, repeat these procedures with the second power supply to verify it works correctly also.

1. Connect the power cord supplied with the switch to the power connector on the back of the switch, and then into a properly grounded electrical outlet.

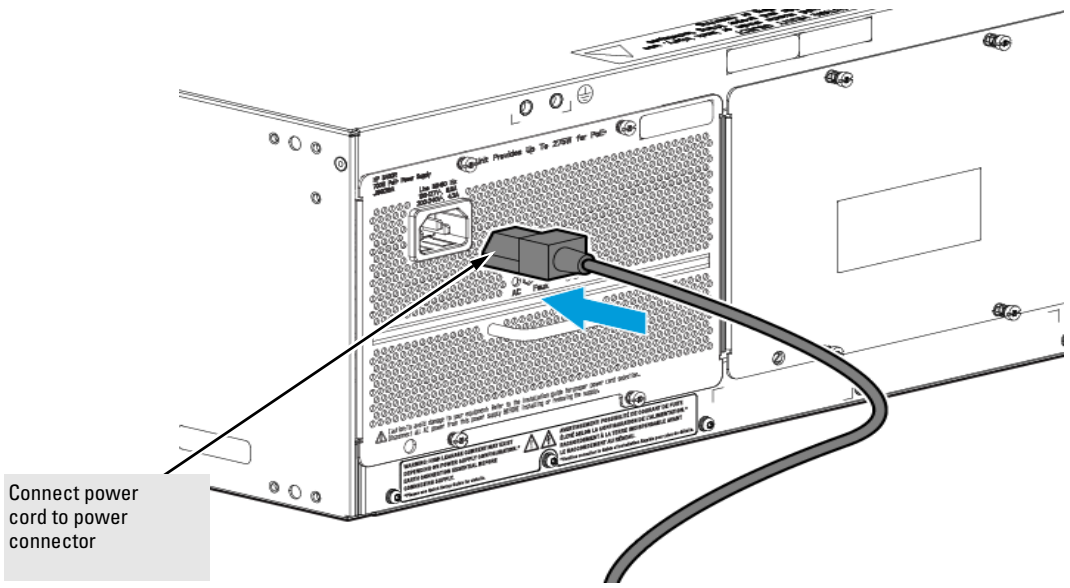

Figure 2-3. Power connector on back of switch

Note

The 5400R zl2 switches do not have a power switch. They are powered on when the power cord is connected to the switch and to a power source.

If your installation requires a different power cord than the one supplied with the switch, see the "Installation Precautions" on page 2-7.

2. Check the LEDs on the switch and on each of the switch modules. The LED behavior is described on the next page.

   If the LED display is different than what is described, especially if the Fault LED stays on for more than approximately 120 seconds or it starts blinking, the self test has not completed correctly. See chapter 4, "Troubleshooting" for diagnostic help.

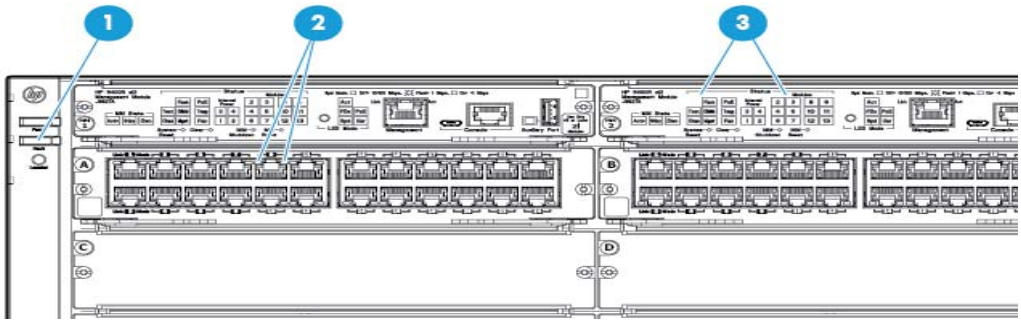

Figure 2-4. Switch Fault, Module, and Chassis LEDs

1	Switch Fault LED
2	Switch Module LEDs: Link and Mode LEDs for each port
3	Switch Chassis LEDs

When the switch is powered on, it performs its diagnostic self test. The entire download, initialization, and self test process can take up to 2 minutes for a fully loaded chassis, depending on the number and type of modules installed in the switch.

LED Behavior:

During the self test:

- Initially, **Power**, **Fault**, **Locator**, and all the switch chassis LEDs are on. Then, after approximately 30 seconds, all the module LEDs go on as the modules receive power and code is downloaded to them, the **Fault** LED goes off, and the chassis LEDs turn orange and then go off except **Test**, **Fan**, and **Power**, which turn green.
- When the download of code to the modules is completed, the module LEDs go off. You may see each port LED go on briefly, in sequence, as the port is tested.
- For the duration of the self test, the **Test** LED stays on.

When the test completes successfully:

- The **Power** LED stays on, and the Status LEDs on the switch chassis stay on for the devices installed: one for each switch module installed, one for each power supply installed, and one for all the fans.
- The **Fault**, **Locator**, and **Test** LEDs are off.
- The port LEDs on the switch modules go into their normal operational mode:
  - If the ports are connected to active network devices, the **Link** LEDs stay on and the **Mode** LEDs behave according to the mode selected. In the default mode (Activity), the Mode LEDs should flicker showing network activity on the port.
  - If the ports are not connected to active network devices, the LEDs will stay off.

For more information on 40G port LED information, see v3 zl2 module installation guide.

5. Mount the Switch

After the modules and optional power supply are installed and you have verified the switch passes self test, you are ready to mount the switch in a stable location. The 5400R zl2 switches can be mounted in these ways:

- in a rack or cabinet
- on a horizontal surface

Rack or Cabinet Mounting

The 5400R zl2 switches are designed to be mounted in any EIA-standard 19-inch telco rack or in an equipment cabinet such as a server cabinet. If you are installing the switch in an equipment cabinet, read the following "Equipment Cabinet Note" on page 2-17.

Equipment Cabinet Note

If you are installing the switch in an **equipment cabinet**, in place of the 12-24 screws supplied with the switch, use the clips and screws that came with the cabinet. Plan which four holes that you will be using in the cabinet and install all four clips and partially install the two bottom screws, as described in step 2 on the previous page, before proceeding to step 3. The number of holes depends on the switch and the rack kit being used. To reduce the switch weight and ease while installation, you can remove the power supplies during the racking process.

WARNING

For safe operation, please read the "Installation Precautions" on page 2-6 and page 2-7 before mounting the switch.

1. Determine position of switch in rack and install a cage nut in the lower hole of the lowest rack unit.

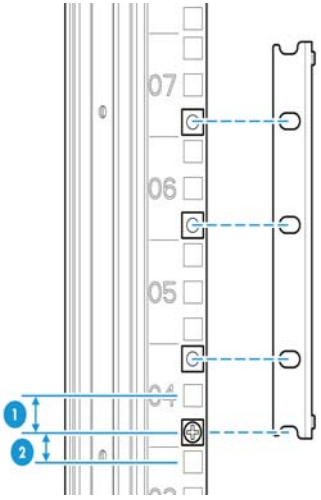

1	0.625 inch (1.588 cm)
2	0.50 inch (1.27 cm)

2. Install a screw half-way into this cage nut.

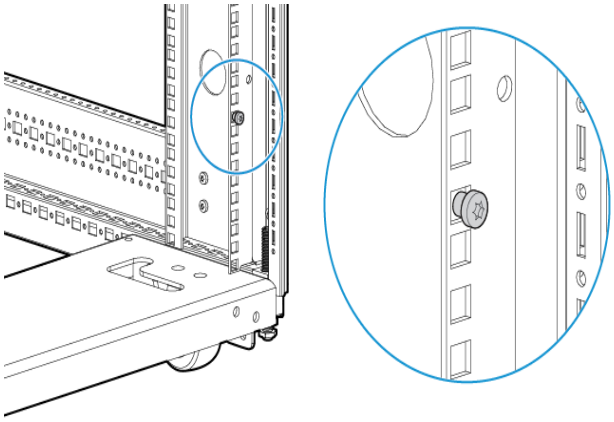

3. Align the included Rack Mount Bracket such that the half-hole lines up with the screw, install additional cage nuts at each hole position in the bracket.

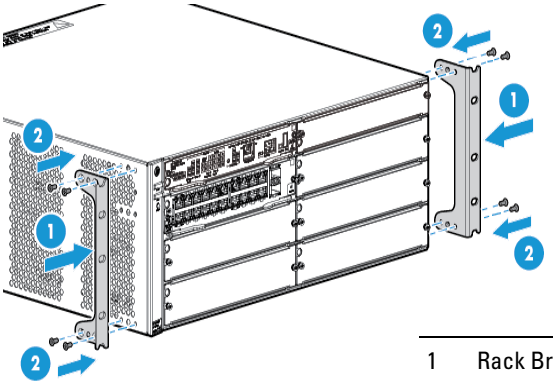

1	Rack Brackets
2	Flat Head Screws

4. Repeat for opposite column in the rack.

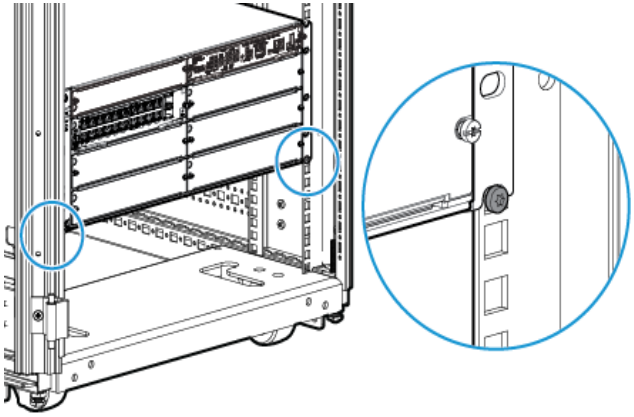

5. Secure the Rack Mount Brackets to the switch with included flat head screws.

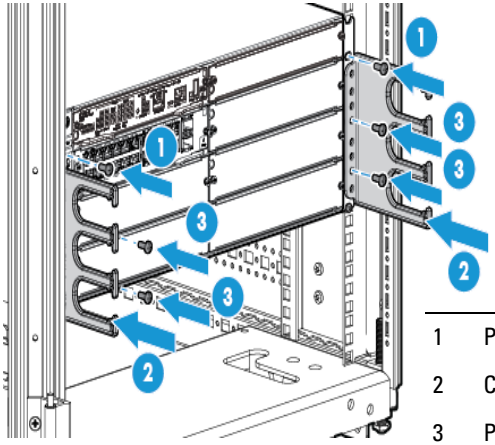

1	Pan Head Screw
2	Cable Manager
3	Pan Head Screw

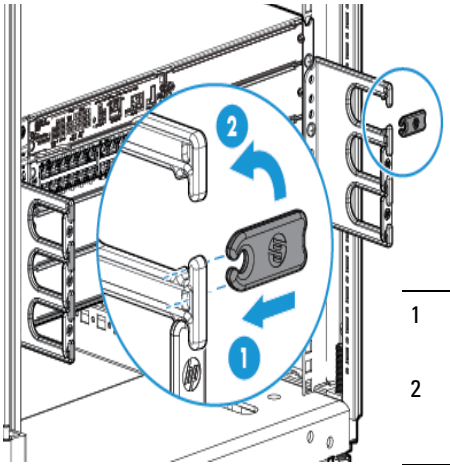

1	Install the retainer horizontally
2	Rotate the retainer to the vertical position

Note

Use only the included 6 mm/0.24 inch flat head screws. Using any of the 8 mm/0.31 inch screw included in other rack mounting kits interferes with internal components.

6. Rest the switch on the two half-way installed screws and secure the switch to the rack using the top hole in each Rack Mount Bracket.
7. Align each Cable Manager such that two holes in the Cable Manager align with two empty holes in the Rack Mount Bracket and secure with two screws.
8. Snap the Cable Retainers into the arms of the Cable Managers.

Horizontal Surface Mounting

Place the switch on a table or other horizontal surface. Use a sturdy surface in an uncluttered area. You may want to secure the networking cables and switch power cord to the table legs or other part of the surface structure to help prevent people from tripping over the cords.

Note

Ensure the air flow is not restricted around the sides and back of the switch.

6. Install the Grounding Wire

If a grounding wire is to be attached to the switch chassis, the grounding lug must be removed and a wire crimped to it and the grounding lug must be reinstalled.

1. Use a Torx T25 driver and remove the grounding lug and two screws from the back of the switch.

2. Crimp the grounding lug to a properly grounded grounding wire.
3. Re-attach the grounding lug to the switch with the two screws.

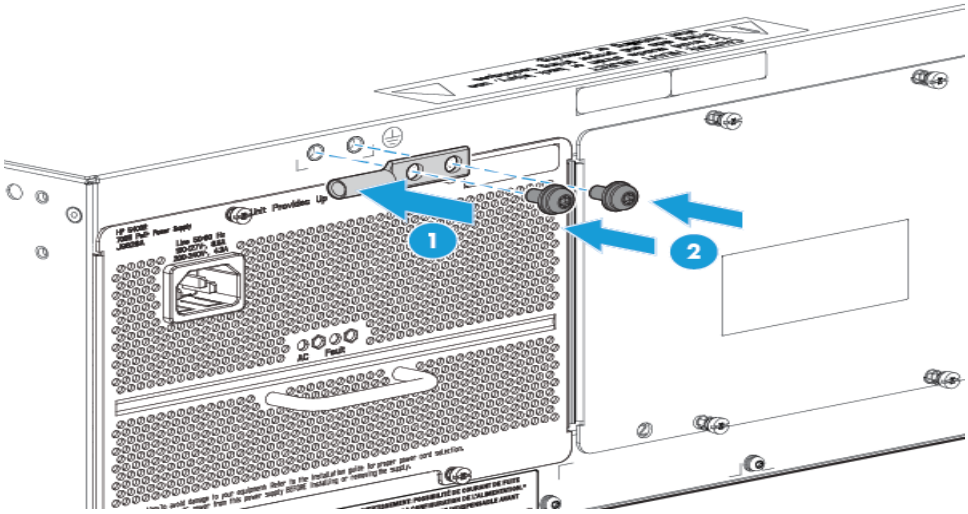

Figure 2-5. Attaching grounding lug to the 5400R zl2 switch

1	Grounding Lug
2	Grounding Lug Screws

7. Connect the Switch to a Power Source

1. Plug the included power cord into the switch's power connector and into a nearby properly grounded AC power source.

   If a redundant power source is available, it is desirable to power one switch power supply from the regular AC source, and the other power supply from the independent AC source. This will provide redundancy in AC power to the switch, as long as the switch PoE power usage falls within the capability of one power supply. If both power supplies are plugged into a common AC source, there is still power supply redundancy, that is, protection against power supply failure, but if the AC source fails, the switch will lose all power.
2. Re-check the LEDs during self test. See "LED Behavior" on page 2-16.

8. Connect the Network Cables

The type of network connections you will need to use depends on the types of switch modules you have installed in your 5400R zl2 Switch. See the documentation accompanying the modules for cabling configurations and procedures for those modules.

In general for all the modules, when a network cable from an active network device is connected to the switch, the Link LED for the switch port should go on. If the Link LED does *not* go on, use the table below to help solve the problem, and see the module documentation for troubleshooting procedures.

For more information on 40G port LED information, see v3 zl2 module installation guide.

Condition	Diagnostic Tip
Port LED is still off when a cable is connected	Try the following procedures: • For the indicated port, verify both ends of the cabling, at the switch and the connected device, are securely connected. • Verify the connected device and switch are both powered *on* and operating correctly. • Verify you have used the correct cable type for the connection: – for all twisted-pair connections, the RJ-45 connectors on the 5400R zl2 switches allow you to use either straight-through cable or crossover cable when the port is in the "Auto" configuration. – for fiber-optic connections, verify the transmit port on the switch is connected to the receive port on the connected device, and the switch receive port is connected to the transmit port on the connected device. See appendix B, "Switch Ports and Network Cables" for information on cables. • Verify the port has not been disabled through a switch configuration change. • Verify the connection parameters in the configurations of the switch port and the connected device match. Mismatched configurations are a frequent cause of connection problems. You can use the console interface, or, if you have configured an IP address on the switch, use the web browser interface, or Intelligent Management Center network management software to determine the state and configuration of the port and re-enable the port if necessary. • If the other procedures don't resolve the problem, try using a different port or a different cable.

10. (Optional) Connect to the Management Console of the Switch

The 5400R zl2 switches have a full-featured, easy to use console interface for performing the following tasks:

- Monitor switch and port status and observe network activity counters
- Modify the switch's configuration
- Read the event log and access diagnostic tools to help in troubleshooting
- Download new software to the switch
- Add passwords and other security features to control access to the switch from the console, web browser interface, and network management stations

The console can be accessed through these methods:

- **Out-of-band:** Connect a PC or VT-100 terminal, to be used as a console, directly to the switch using the serial cable that comes with the 5400R zl2 switches. If the PC or terminal has a 25-pin serial connector, you can use a readily available 9-pin to 25-pin serial cable, or attach a 9-to-25 pin straight-through adapter to the PC end of the cable.
- **In-Band:** Access the console using telnet from a PC or UNIX station on the network, and a VT-100 terminal emulator. This method requires that you first configure the switch with an IP address and subnet mask by using either out-of-band console access or through DHCP/Bootp.

Terminal Configuration

To connect a console to the switch, configure the PC terminal emulator as a VT-100 or DEC VT-100 (ANSI) terminal, or use a VT-100 terminal and configure it to operate with these settings:

- any baud rate from 2400 to 115200 (the switch automatically senses the speed)
- 8 data bits, 1 stop bit, no parity, and flow control set to None
- for Windows Terminal program, also disable (uncheck) the "Use Function, Arrow, and Ctrl Keys for Windows" option
- for the Hilgrave HyperTerminal program, select the "Terminal keys" option for the "Function, Arrow, and Ctrl keys act as" parameter

If you want to operate the console using a different configuration, ensure you change the settings on both the terminal and on the switch. Change the switch settings first, then change the terminal settings, and reestablish the console session.

Setting Up a Console Connection

To access the Switch through an Console port (out-of-band) connection, follow these steps:

1. Configure the management console as described above under "Configuring the Management Console Connection".
2. For a direct console connection, connect the PC or terminal to the Console serial port using one of these console cables:
   a. A DB9-to-RJ45 cable (shipped with the switch).
   b. A micro-USB cable (not provided).

The USB console drivers are available at www.hp.com/networking/support.

The following are the steps to download the driver:

   c. Type a product model (for example, 5400) or product number in the Auto Search text box.
   d. Select one of the switches from the dropdown list, and click the Display selected button.
   e. From the options that appear, select Software downloads (on the right-hand side). Then, download the "USB Console Port Drivers and Information".

Also, both console ports are not active at the same time and after sometime the USB console port times out.

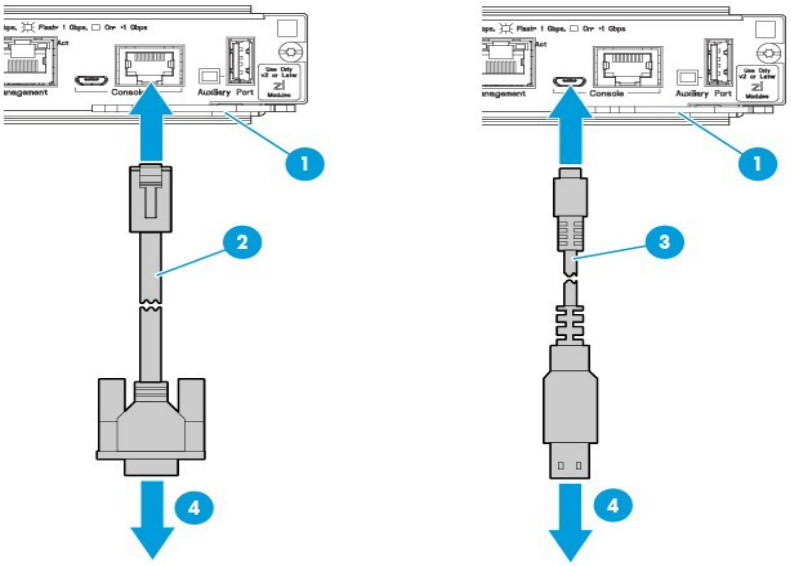

Figure 2-6. Console Connection

1	Console Port
2	RJ-45 to DB9 console cable supplied with the switch
3	Optional USB console cable (not supplied)
4	To PC running a terminal emulator program, or a VT-100 terminal

3. Power on the management console (terminal or PC). If you are using a PC, start the PC terminal program.
4. For a direct console connection through the Console port:
   a. Press **Enter** two or three times to display the copyright page, and the message "Press any key to continue".
   b. Press any key to display the switch console command (CLI) prompt; for example: **HP 5900#**
   c. Continue the console session to configure the switch by following the procedure in "Minimal Configuration Through the Out-of-Band Console Connection" on page 3-2

Console Cable Pinouts

The console cable has an RJ-45 plug on one end and a DB-9 female connector on the other end. Table 2-2 describes the mapping of the RJ-45 to DB-9 pins module.

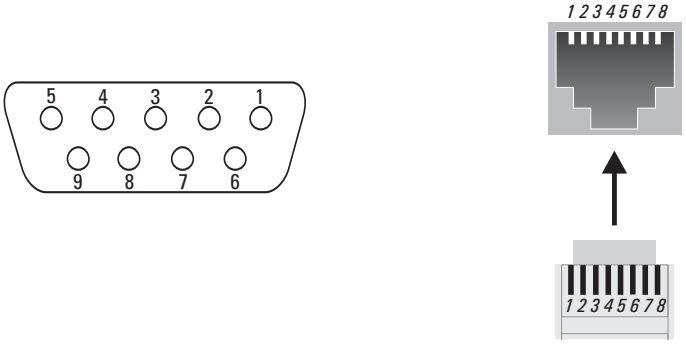

Figure 2-7. RJ-45 to DB-9 pinouts

Table 2-2. Mapping of RJ-45 to DB-9

RJ-45 (Signal reference from Chassis)		DB-9 (Signal reference from PC)	
Reserved	1	8	CTS
Reserved	2	6	DSR
TXD	3	2	RXD
Reserved	4	1	DCD
GND	5	5	GND
RXD	6	3	TXD
Reserved	7	4	DTR
Reserved	8	7	RTS
		9	RI

Telnet Console Access

To access the switch through a telnet session, follow these steps:

1. Ensure the switch is configured with an IP address and that the switch is reachable from the telnet workstation (for example by using a Ping command to the switch's IP address)

2. Start the telnet program and connect to the switch's IP address.
3. The copyright page and the message "Press any key to continue" will display. Press a key, and the switch console CLI prompt will display.

If you want to continue with console management of the switch at this time through either a direct connection or a TELNET session, see chapter 3, "Getting Started With Switch Configuration" for some basic configuration steps. For more detailed information, refer to the *Management and Configuration Guide* which is on the HP networking Web site.

Out-of-Band Management (OOBM) Port

This RJ-45 port is used to connect a dedicated management network to the switch.

To use: connect an RJ-45 network cable to the Management port to manage an HP 5400R zl2 Switch through Telnet from a remote PC or a UNIX workstation.

To use this port, the switch must have an IP address. IP settings can be configured through a Console port connection or automatically from a DHCP/Bootp server.

A networked out-of-band connection through the Management port allows you to manage data network switches from a physically and logically separate management network.

For more information, see the "Network Out-of-Band Management (OOBM)" appendix in the *Management and Configuration Guide* at: www.hp.com/networking/support.

Hot Swapping Switch Modules

The switch modules can be "hot swapped" (except for the Management Module, it is not hot swappable), that is installed or replaced while the switch is powered on (See Module Installation Notes on page 2-8). The procedures differ slightly, though between adding new modules to an empty slot or replacing modules with the same type, and exchanging the module with a different type.

Adding or Replacing Modules

If a module has to be replaced with one of the same type, or you are expanding the switch capability by adding a module in a slot where one was not previously installed (since the last switch reboot), the replaced or new module is immediately operational; there is no interruption to the switch operation.

When you are replacing a module in a slot with another module of different type, the new module does not immediately operate, since the switch contains configuration (such as VLAN membership) involving ports of the older module. Replacing the module does NOT automatically remove such configuration. To remove the older configuration, run the following command from the command line interface:

```
no module X
```

where, X is the slot letter of the module to be replaced. After you run command, the slot is restored to a state where no module was previously installed. When you insert the new module, the module operates immediately.

3

Getting Started With Switch Configuration

This chapter is a guide for using the console Switch Setup screen to quickly assign an IP (Internet Protocol) address and subnet mask to the switch, set a Manager password, and, optionally, configure other basic features.

For more information on using the switch console and the other switch management interfaces: the web browser interface and the SNMP management tool, Intelligent Management Center, see the *Management and Configuration Guide* on the HP networking Website.

Recommended Minimal Configuration

In the factory default configuration, the switch has no IP (Internet Protocol) address and subnet mask, and no passwords. In this state, it can be managed only through a direct console connection. To manage the switch through in-band (networked) access, you should configure the switch with an IP address and subnet mask compatible with your network. Also, you should configure a Manager password to control access privileges from the console and web browser interface. Other parameters in the Switch Setup screen can be left at their default settings, or you can configure them with values you enter.

Many other features can be configured through the switch's console interface, to optimize the switch's performance, to enhance your control of the network traffic, and to improve network security. Once an IP address has been configured on the switch, these features can be accessed more conveniently through a remote Telnet session, through the switch's web browser interface, and from an SNMP network management station running a network management program, such as Intelligent Management Center. For a listing of switch features available with and without an IP address, refer to "How IP Addressing Affects Switch Operation" in the *Management and Configuration Guide* which is on the HP networking Website.

For more information on IP addressing, see "IP Configuration" in the *Management and Configuration Guide*.

Note

By default, the switch is configured to acquire an IP address configuration from a DHCP or Bootp server. To use DHCP/Bootp instead of the manual method described in this chapter, see "DHCP/Bootp Operation" in the *Management and Configuration Guide* which is on the HP networking Website.

Using the Switch Setup Screen

The quickest and easiest way to minimally configure the switch for management and password protection in your network is to use a direct console connection to the switch, start a console session, and access the Switch Setup screen.

1. Using the method described in the preceding section, connect a terminal device to the switch and display the switch console command (CLI) prompt (the default display).

   The CLI prompt appears displaying the switch model number, for example:

   HP 5412Rzl2#

2. At the prompt, enter the **`setup`** command to display the Switch Setup screen. The following illustration is an example of a Setup screen with default settings.


```
Status and Counters - General System Information

 System Name         : HP-5412Rzl2
 System Contact      :
 System Location     :

 MAC Age Time (sec) : 300

 Time Zone           : 0
 Daylight Time Rule : None

 Software revision   : KB.15.15.0000x       Base MAC Addr       : f0921c-452200
 ROM Version         : KB.15.01.0001        Serial Number       : SG3ZG95050
                                            Opacity Shields     : Not Installed

 Up Time             : 5 days               Memory   - Total    : 786,288,640
 CPU Util (%)        : 0                             Free     : 676,134,768

 IP Mgmt  - Pkts Rx : 19,838                Packet   - Total    : 6750
            Pkts Tx : 20,118                Buffers    Free     : 4830
                                                       Lowest   : 4787
                                                       Missed   : 0

HP-5412Rzl2#
```

Figure 3-1. Switch Setup Screen

3. Use the Tab key to select the **Manager Password** field and enter a manager password of up to 16 characters.
4. Tab to the **IP Config (DHCP/Bootp)** field and use the Space bar to select the `Manual` option.
5. Tab to the **IP Address** field and enter the IP address that is compatible with your network.
6. Tab to the **Subnet Mask** field and enter the subnet mask used for your network.
7. Press Enter, then S (for `Save`).

The following is information on the fields in the Setup screen. For more information on these fields, see the *Management and Configuration Guide* which is on the HP networking Web site.

Parameter	Default	
System Name	blank	Optional; up to 25 characters, including spaces
System Contact	blank	Optional; up to 48 characters, including spaces
Manager Password	blank	Recommended; up to 16 characters (no blank spaces)
Logon Default	CLI	The default setting selects the command line interface for console access. The alternative is the Menu interface.
Time Zone	0 (none)	Optional; 1440 to -1440. The number of minutes your location is to the West (-) or East (+) of GMT.
Community Name	public	Default setting recommended.
Spanning Tree Enabled	No	Default setting recommended unless STP is already running on your network or the switch will be used in complex network topologies.
Default Gateway	blank	Recommended; Enter the IP address of the next-hop gateway node if network traffic needs to be able to reach off-subnet destinations.
Time Sync Method	TimeP	Optional; The protocol the switch uses to acquire a time signal. The options are SNTP and TimeP.
TimeP Mode	Disabled	Synchronizes the time kept on the switch to the TimeP server.
IP Config	DHCP/Bootp	Set to Manual unless a DHCP/Bootp server is used on your network to configure IP addressing.
IP Address	xxx.xxx.xxx.xxx	Recommended; If you set IP Config to Manual, then enter an IP address compatible with your network.
Note: The IP address and subnet mask assigned for the switch must be compatible with the IP addressing used in your network. For more information on IP addressing, see the *Management and Configuration Guide* which is on the HP networking Web site.		
Subnet Mask	xxx.xxx.xxx.xxx	Recommended; If you entered an IP address, then enter a subnet mask compatible with your network.

Where to Go From Here

The above procedure configures your switch with a Manager password, IP address, and subnet mask. As a result, with the proper network connections, you can now manage the switch from a PC equipped with Telnet, a web browser interface, or from an SNMP-based network management station using a tool such as IMC.

Some basic information on managing your switch is included in the next section. For more information on the console, web browser, and SNMP management interfaces and all the features that can be configured on the 5400R zl2 switches, see the *Management and Configuration Guide* which is on the HP networking Web site.

To Recover from a Lost Manager Password: If you cannot start a console session at the manager level because of a lost Manager password, you can clear all passwords and user names by getting physical access to the switch and pressing and holding the Clear button for a full second.

Using the IP Address for Remote Switch Management

With your 5400R zl2 switches, you can use the switch's IP address to manage the switch from any PC that is on the same subnet as the switch. You can use either a Telnet session or a standard web browser to manage the switch.

Starting a Telnet Session

To access the switch through a Telnet session, follow these steps:

1. Ensure the switch is configured with an IP address and that the switch is reachable from the PC that is running the Telnet session (for example, by using a ping command to the switch's IP address).
2. Start the Telnet program on a PC that is on the same subnet as the switch and connect to the switch's IP address.
3. You will see the copyright page and the message "Press any key to continue". Press a key, and you will then see the switch console command (CLI) prompt, for example (assuming there is no password):

   ```
   HP 5400Rzl2#
   ```

   Enter `help` or `?` to see a list of commands that can be executed at the prompt. Entering any command followed by `help` provides more detailed context help information about the command. Entering any command followed by `?` displays a list of options that are available at that point in the command entry.

Starting a Web Browser Session

Your 5400R zl2 switch can be managed through a graphical interface that you can access from any PC or workstation on the network by running your web browser and typing in the switch's IP address as the URL. No additional software installation is required to make this interface available; it is included in the switch's onboard software.

An example web browser interface screen is shown in the next illustration.

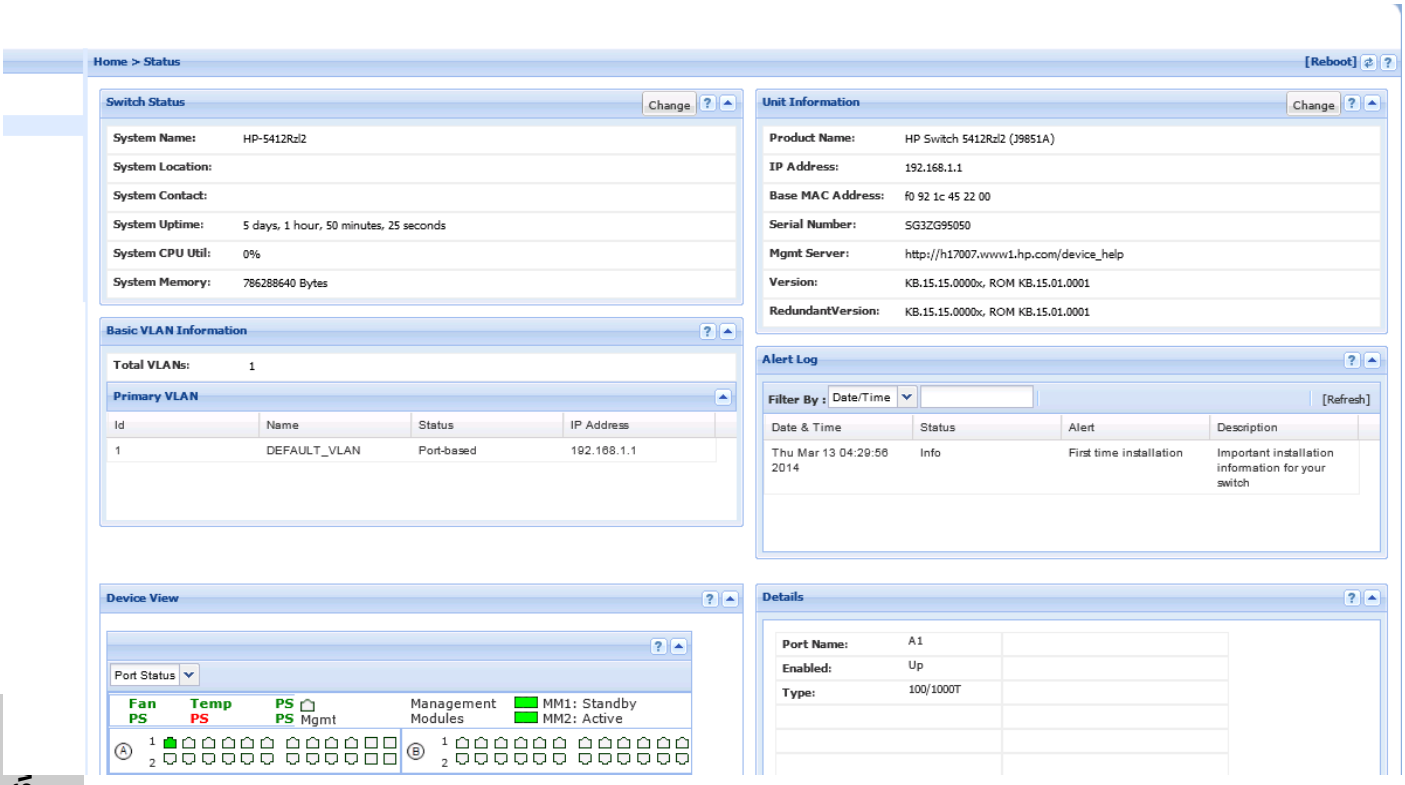

Figure 3-2. Switch Web Browser Interface - Status Overview

For more information on using the web browser interface, please see the *Management and Configuration Guide* which is on the HP networking Web site.

An extensive help system is also available for the web browser interface. To access the help system though, the subnet on which the switch is installed must have access to the internet, or Intelligent Management Center needs to be installed on a network management station that is on the subnet.

Replacing Components

This chapter shows you how to remove and install the following components:

- Power supplies (see page 4-2)
- Fan trays (see page 4-4)
- Management module (see page 4-5)
- Management module components SD card (see page 4-6)

For a complete list of parts and part numbers, see (page 2-1)

Hot Swapping

The HP 5400R zl2 Switch supports “hot swapping” - the ability to replace the following hardware components while the switch is operating: a fan tray, power supply (if a second power supply is installed), and interface module.

The Management module and its components are not hot swappable.

The hot swapping feature allows you to remove or install modules without powering off or rebooting the switch. Swapped-in modules are recognized by the switch and begin functioning immediately, after they are installed.

Caution

The HP 5400R zl2 Switch and its components are sensitive to static discharge. Use an antistatic wrist strap and observe all static precautions when hot swapping components. For example, connect your antistatic wrist strap to the ground point on the front of the switch, above the rightmost power supply bay.

WARNING

This unit may have more than one power supply cable. To fully power down the switch, you must disconnect all power supply cables from the unit.

Replacing Power Supplies

If your HP 5400R zl2 Switch is configured with redundant power supplies, you will not suffer any loss of traffic or performance if a power supply fails. Replace the failed component as soon as possible. One of the Internal Power LEDs on the management module will blink simultaneously with the switch Fault LED indicating which power supply failed.

Although these procedures show the 6-slot chassis, the procedures are the same for the 12-slot chassis.

To remove an AC power supply:

1. Ensure the AC power supply is not plugged into an AC power source on the failed power supply.
2. Using either a flat-bladed or Torx T-10 screwdriver loosen the retaining screws and remove the failed power supply.

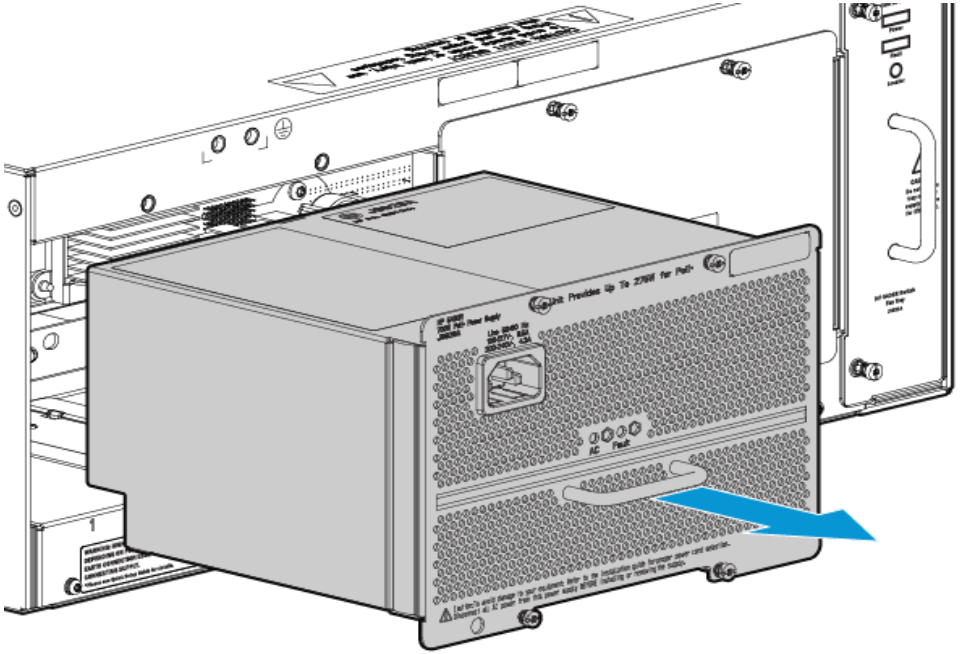

Figure 4-1. Power supply removal

3. Insert the power supply into the opening. Slide it all the way in until it connects to the switch. The power supply face plate will be flush with the back face of the switch.

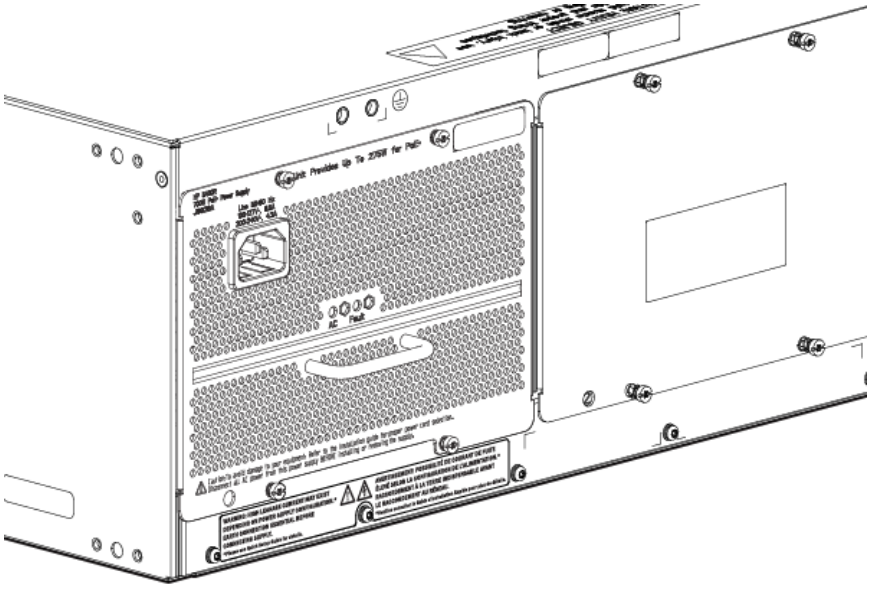

Figure 4-2. Power supply installation

4. Tighten the four retaining screws that hold it in place. Be careful not to overtighten the screws.

For more details, see the *HP Switch zl2 Internal Power Supply Installation Guide*.

Replacing Fan Trays

When a fan fails the Fan Status LED on the management module blinks simultaneously with the switch Fault LED. In this case, the entire fan tray needs to be replaced. You cannot replace individual fans.

The fan tray is hot swappable. It can be removed and replaced without removing power from the switch. However, install the new fan tray immediately (after two minutes) after removing the old fan tray to avoid overheating and switch shutdown (after three minutes). The fan tray is provided with a hotswap controller on the backplane to control the fan power interface during insertion and removal.

Although these procedures show the 6-slot chassis, the procedures are the same for the 12-slot chassis.

WARNING **To avoid contact with spinning fans, if you are hot swapping out the fan tray assembly, pull the assembly out one-inch and allow the fans to stop rotating (approximately 20 seconds) before pulling it all the way out.**

To replace a fan tray:

1. Using either a flat-bladed or Torx T-10 screwdriver loosen the retaining screws holding the fan tray assembly and pull the fan tray assembly out.
2. Install the new fan tray assembly and tighten the retaining screws.

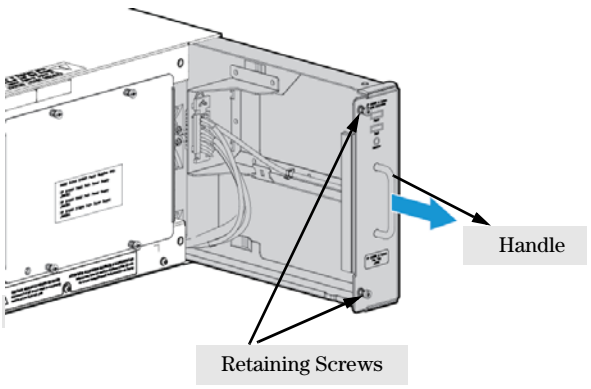

Figure 4-3. 5406R zl2 Switch Fan Tray removal

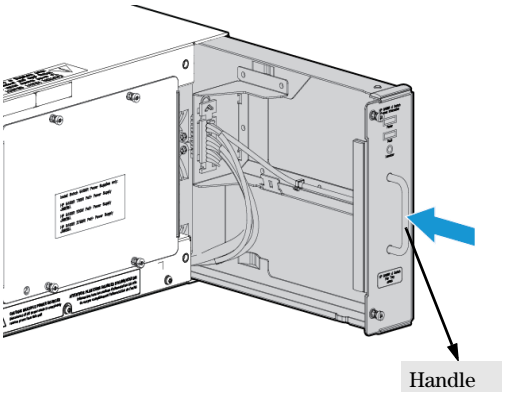

Figure 4-4. 5406R zl2 Switch Fan Tray insertion

Replacing the Management Module

The switch does not have to be powered off to remove the management module, however, when the management module is removed all ports will lose communication. HP networking recommends replacing all components during the scheduled down time.

To install (or replace) a Management Module:

1. On the module, unscrew the retaining screws enough to disconnect them from the threaded holes in the switch.
2. Using the extractor handles, pull the module out from the slot.
3. Remove the flash disk from the failed module and install it into the replacement module.
4. Remove the battery from the failed module and dispose of properly.
5. Install the new battery that came with the replacement module. See "Installing a Management Module Battery" on page 2-10 for instructions.
6. Install the replacement module into the switch.
7. Use an equal amount of pressure and push both extractor handles closed to completely seat the module.
8. Tighten the retaining screws.

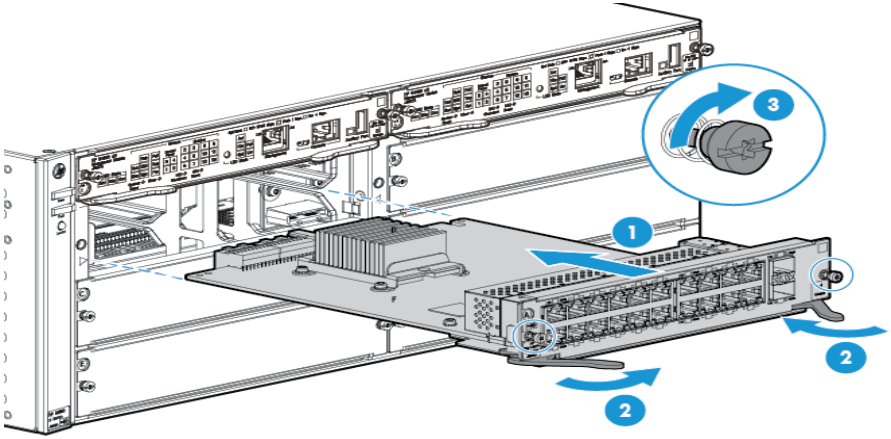

Figure 4-5. Management Module removal and installation

1	Management Module

2	Extractor handles
3	Retaining screws

You can use MM Shutdown button to replace an active Management Module. This helps the standby MM to become active.

Replacing the Management Module SD Card

The SD card is the primary non-volatile storage medium located on the management module that contains both the boot software and configuration files. When a SD card fails, the SD status LED on the management module blinks simultaneously with the switch Fault LED. Both the SD and the Fault flashing are amber in color (LEDs are green with normal functionality). In addition, the Locator LED will be a solid blue.

Installing an SD Card

To install (or replace) an SD card:

1. Using either a flat-bladed or Torx T-10 screwdriver loosen the retaining screws securing the management module. (You cannot access the SD when the management module is installed. This prevents inadvertent removal of the system image while the system is running.)
2. Using the extractor handles, pull the management module out from the slot If a retention pin in front of the SD card slot is present, then you must use needle-nose pliers to pull the pin out of the hole before the SD card can be removed.

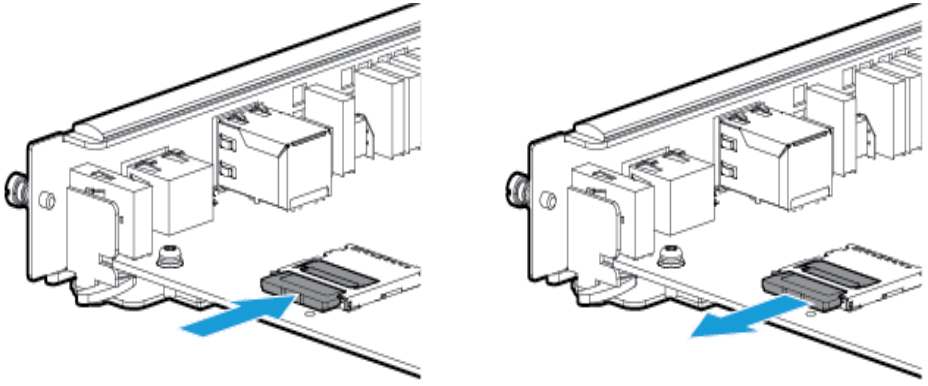

Figure 4-6. Secure Digital installation and removal

3. Slide out the old SD card.
4. Slide in the new SD card being careful not to bend any pins.
5. Reinstall the management module into the switch.
6. Use an equal amount of pressure and push both extractor handles closed to completely seat the module.
7. Tighten the retaining screws.

Troubleshooting

This chapter describes how to troubleshoot your 5400R zl2 switches. Note that this document describes troubleshooting mostly from a hardware perspective. You can perform more in-depth troubleshooting using the software tools available with the switch, including the full-featured console interface, the built-in web browser interface, and IMC, the SNMP-based network management tool. For more information, see the chapter "Troubleshooting" in the *Management and Configuration Guide*, which is on the HP networking Web site at **www.hp.com/networking/support**.

This chapter describes the following:

- Basic troubleshooting tips (page 5-2)
- Diagnosing with the LEDs (page 5-4)
- HP networking tools (page 5-10)
- Hardware diagnostic tests (page 5-11)
- Restoring the factory default configuration (page 5-14)
- Downloading new code (page 5-15)
- HP Customer Support Services (page 5-15)

Basic Troubleshooting Tips

Most problems are caused by the following situations. Check for these items first when starting your troubleshooting:

- **Faulty or loose cables.** Look for loose or obviously faulty connections. If they appear to be OK, make sure the connections are snug. If that does not correct the problem, try a different cable.
- **Non-standard cables.** Non-standard and miswired cables may cause network collisions and other network problems, and can seriously impair network performance. Use a new correctly-wired cable or compare your cable to the cable in appendix B, “Cabling and Technology Information” on page B-1 for pinouts and correct cable wiring. A category 5 cable tester is a recommended tool for every 100Base-TX and 1000Base-T network installation.
- **Improper Network Topologies.** It is important to make sure you have a valid network topology. Common topology faults include excessive cable length and excessive repeater delays between end nodes. If you have network problems after recent changes to the network, change back to the previous topology. If you no longer experience the problems, the new topology is probably at fault.

  In addition, you should make sure that your network topology contains ***no data path loops***. Between any two end nodes, there should be only one active cabling path at any time. Data path loops will cause broadcast storms that will severely impact your network performance.

  With your 5400R zl2 switches, if you wish to build redundant paths between important nodes in your network to provide some fault tolerance, you should enable **Spanning Tree Protocol** support on the switch. This ensures that only one of the redundant paths is active at any time, thus avoiding data path loops. Spanning Tree can be enabled through the switch console, the web browser interface, or IMC.

  The 5400R zl2 switches also support **Trunking**, which allows multiple network cables to be used for a single network connection without causing a data path loop. See the *Management and Configuration Guide* for more information on Spanning Tree and on Trunking, which is on the HP networking Web site.

- **Connecting to devices that have a fixed full-duplex configuration.** The RJ-45 ports on the 5400R zl2 switches are all configured as "Auto". That is, when connecting to attached devices, the switch will operate in one of two ways to determine the link speed and the communication mode (half duplex or full duplex):
  - if the connected device is also configured to Auto, the switch will automatically negotiate both link speed and communication mode
  - if the connected device has a fixed configuration, for example 100 Mbps, at half or full duplex, the switch will automatically sense the link speed, but will default to a communication of *half* duplex

  Because the 5400R zl2 switches behave in this way *(in compliance with the IEEE 802.3 standard)*, if a device connected to the switch has a fixed configuration at *full* duplex, the device will not connect correctly to the switch. The result will be high error rates and very inefficient communications between the switch and the device.

  Ensure that all devices connected to the 5400R zl2 switches are configured to auto negotiate, or are configured to connect at half duplex (all hubs are configured this way, for example).

  If necessary though, you can modify the configuration of the ports on the 5400R zl2 switches to match the configuration of the connected device. Use the switch console, the web browser interface, or IMC to modify the port configuration.

- **Check the port configuration.** A port on your 5400r zl2 switch may not be operating as you expect because it has been put into a "blocking" state by Spanning Tree, GVRP (automatic VLANs), or LACP (automatic trunking). (Note that the normal operation of the Spanning Tree, GVRP, and LACP features may put the port in a blocking state.) Or, the port just may have been configured as disabled through software.

  Use the switch console to determine the port's configuration and verify that there is not an improper or undesired configuration of any of the switch features that may be affecting the port. See the *Management and Configuration Guide* which is on the HP networking Web site.

For more information on possible network problems and their solutions, refer to the technical note "Troubleshooting LAN Performance and Intermittent Connectivity Problems", which can be found on the HP networking Web site in the Reference Library, **www.hp.com/networking/support**, in the A-Z index section.

Diagnosing with the LEDs

Table 5-1 shows LED patterns on the switch and the switch modules that indicate problem conditions.

1. Check in the table for the LED pattern you see on your switch
2. Refer to the corresponding diagnostic tip on the next few pages.

Table 5-1. LED Error Indicators

LED Pattern Indicating Problems							Diagnostic Tips
Power	Fault	Test	Module Status (one LED per module)	Power (one LED per power supply)	Fan	Port Link	
Off with power cord plugged in	1	1	1	1	1	1	❶
On	Prolonged On	Prolonged On	1	1	1	1	❷
On	Blinking[2]	Blinking[2]	Off	1	1	1	❸
On	Blinking[2]	Blinking[2]	Blinking[2]	1	1	Never On	❹
On	Blinking[2]	Blinking[2]	Blinking[2]	1	1	On briefly, then Off	❺
On	Blinking[2]	Blinking[2]	Blinking[2]	1	1	Blinking[2]	❻
On	Blinking[2]	Off	1	Blinking†	*	1	❼
On	Blinking[2]	Off	1	1	Blinking†	1	❽
On	Off	Off	Off	1	1	Fast blinking[3]	❾
On	Off	Off	On	1	1	Off with cable connected	❿

1 This LED is not important for the diagnosis.
2 The blinking behavior is an on/off cycle once every 1.6 seconds, approximately.
3 The fast blinking behavior is an on/off cycle once every 0.8 seconds, approximately

Diagnostic Tips:

Tip Number	Problem	Solution
❶	The power supplies installed in the switch are not plugged into active AC power sources, or the power supply may have failed.	1. Verify the power cord is plugged into an active power source and to the switch. Ensure these connections are snug. 2. Try power cycling the switch by unplugging and plugging the power cord back in. 3. If the Power LED is still not on, verify the AC power source works by plugging another device into the outlet. Or try plugging the switch into a different outlet or try a different power cord. If the power source and power cord are OK and this condition persists, the switch power supply may have failed. Call your authorized reseller or authorized service provider, or use the electronic support services from HP to get assistance. See the Customer Support/Warranty card for more information.
❷	A switch hardware failure has occurred. All the LEDs will stay on indefinitely.	Try power cycling the switch. If the fault indication reoccurs, the switch may have failed. Call your authorized reseller or authorized service provider, or use the electronic support services from HP to get assistance. See the Customer Support/ Warranty card for more information.
❸	The switch has experienced a backplane failure during self test.	The failure may be just in the communications with a single module slot, or it might be more significant. Start a console session with the switch, and at the CLI prompt issue the command **show logging**. In the event log that is displayed, there will be messages that describe the extent of the problem. If the problem is with individual slots, the remainder of the switch slots will be fully operational and can be used until you get a chance to replace the switch. If necessary to resolve the problem, contact Call your authorized reseller or authorized service provider, or use the electronic support services from HP to get assistance. See the Customer Support/Warranty card for more information.
❹	The module installed in the slot that corresponds to the letter that is blinking is an invalid module.	Ensure you have installed a **zl** or **zl2** module in the slot. The HP xl/gl/vl modules will not fit in the interface module slots in 5400R zl2 family, and they are not compatible with HP 5400R zl2 switch. Check to ensure the module has a Blue “zl module” or “zl2 module” symbol on it. Remove the module from the switch and replace it with a zl module or zl2 module, or recover the slot with the cover plate. You can remove and replace the module without having to power down the switch. Call your authorized reseller or authorized service provider, or use the electronic support services from HP to get information on supported Switch zl or zl2 modules. You can also view the switch message log for more details on specific errors. The modules that are available as of the printing of this manual are listed on page 1-22.

Tip Number	Problem	Solution
❺	The module installed in the slot that corresponds to the letter that is blinking has experienced a self test or initialization fault.	The modules are all tested whenever the switch is powered on, or reset (through the Reset button on the switch, or the Boot or Reset options in the console or web browser interface), and when they are hot swapped (installed when the switch is powered on). Since the Link and Mode LEDs on the module were lit at least briefly, that indicates that the module did receive power from the switch, but the subsequent download process failed. Either the module is faulty, or it is a new module type that is not yet supported by the operating code on the switch. As HP networking introduces new modules for your HP 5400R zl2, you may have to update the switch with new operating code that supports the new module. The documentation that came with the module will indicate which version of the operating code is needed to support the module. The modules that are supported in your 5400R zl2, as of the printing of this manual, are listed on page 1-22 under "Switch Features". The latest code can be downloaded from the HP networking Web site at **www.hp.com/networking/support**. First verify the switch has a version of code that supports the module that is indicating the fault. If the module is not one of the ones listed on page 1-22, check the module documentation to see what version of switch code is needed. Download the new code and retest the module. If you have the correct code installed in the switch, try removing and reinstalling the module. You can do this without having to power down the switch. When the module is reinstalled, it will be retested automatically. If the fault indication reoccurs, the module may have failed. Remove the module from the switch and replace it with another module, or recover the slot with the cover plate. Call your authorized reseller or authorized service provider, or use the electronic support services from HP to get assistance. See the Customer Support/ Warranty card for more information.

Tip Number	Problem	Solution
❻	The network port for which the Link LED is blinking has experienced a self test or initialization failure.	During the module self test, described in tip number 4 earlier in this table, each network port is also tested. If the port self test fails, the individual port is not usable, but the rest of the ports on the module, which have passed their self test, will continue to operate normally. If the port is a transceiver, verify it is one of the transceivers supported by the Module. Unsupported transceivers will be identified with this fault condition. The supported transceivers are listed in the module *Installation Guide*. The transceivers are also tested when they are "hot-swapped"--installed or changed after the Module is installed and receiving power from the switch. To verify the port has failed, try removing and reinstalling the module, as described in tip number 4. For the transceivers, you can just remove and reinstall the transceiver without having to remove the module. If the port fault indication reoccurs, and you need to be able to use the port, you will have to replace the transceiver or the module. In the mean time, all the other module ports will operate normally. For more information on 40G port self-test or initialization failure, see v3 zl2 module installation guide.
❼	A fault condition has been detected on the power supply installed in the slot corresponding to the blinking number.	Try removing and reinstalling the power supply. ***Caution:*** *Ensure the AC power cord is disconnected from the supply before removing and reinstalling the supply.* Reconnect the power supply to the AC power source. If the error indication reoccurs after the supply is reinstalled, the power supply may be faulty. Call your authorized reseller or authorized service provider, or use the electronic support services from HP networking to get assistance. See the Customer Support/Warranty card for more information.
❽	One or more of the switch cooling fans may have failed.	Try disconnecting power from the switch and wait a few moments. Then reconnect the power to the switch and check the LEDs again. If the error indication reoccurs, one or more of the fans has failed. The switch has multiple fans and may continue to operate OK under this condition if the ambient temperature does not exceed normal room temperature, but for best operation, replace the fan tray. Call your authorized reseller or authorized service provider, or use the electronic support services from HP networking to get assistance. See the Customer Support/Warranty card for more information.

Tip Number	Problem	Solution
❾	The network port for which the Link LED is blinking has been disabled because port security has been configured on the switch and a security violation has been detected on the port.	For the Port Security feature, you can configure the switch so that whenever a security violation is detected on a port, the switch will disable the port. When a port is disabled by this feature, the port Link LED will be continuously flashed at the fast rate of 0.8 seconds per cycle. The blinking continues until you clear the security violation through the switch console. In the console, you can view the identity of the connected device that committed the security violation. Once the security violation is cleared, you must re-enable the port through the console. For more information on the Port Security feature, see the *Management and Configuration Guide* **which is on the HP networking Web site. See page 5-1 for details.** For more information on 40G port self-test or initialization failure, see v3 zl2 module installation guide.

Tip Number	Problem	Solution
⑩	The network connection is not working properly.	Try the following procedures: • For the indicated port, verify both ends of the cabling, at the switch and the connected device, are securely connected. • Verify the connected device and switch are both powered *on* and operating correctly. • Verify you have used the correct cable type for the connection. – for any of the twisted-pair connections, in the default configuration (Auto), either a straight-through or a crossover cable can be used and the switch will automatically adjust its operation. See the "HP Auto-MDIX Feature" description on page B-8 for more information. ***Note:*** *If the module configuration is changed to one of the* ***fixed configuration*** *options though (for example, 100-Full Duplex), then the port operates as* ***MDI-X only*** *and the correct type of cable must be used. in general, for connecting to an end node (MDI port), use straight-through cable; for connecting to MDI-X ports on hubs, other switches, and routers, use crossover cable.* – for fiber-optic connections, verify that the transmit port on the switch is connected to the receive port on the connected device, and the switch receive port is connected to the transmit port on the connected device, and that both devices are transmitting correctly. • For a 1000 Mbps connection, verify the network cabling complies with the IEEE 802.3ab standard. The cable should be installed according to the ANSI/TIA/EIA-568-A-5 specifications. Cable testing should comply with the stated limitations for Attenuation, Near-End Crosstalk, Far-End Crosstalk, Equal-Level Far-End Crosstalk (ELFEXT), Multiple Disturber ELFEXT, and Return Loss. The cable verification must include all patch cables from any end devices, including the switch, to any patch panels in the cabling path. • Verify the port has not been disabled through a switch configuration change. You can use the console interface, or, if you have configured an IP address on the switch, use the web browser interface, or IMC network management software to determine the state of the port and re-enable the port if necessary. • Verify the switch port configuration matches the configuration of the attached device. For example, if the switch port is configured as "Auto", the port on the attached device also MUST be configured as "Auto". Depending on the port type, twisted-pair or fiber-optic, if the configurations don't match, the results could be a very unreliable connection, or no link at all. If the other procedures don't resolve the problem, try using a different port or a different cable.

HP networking tools

The 5400R zl2 switches have built-in management capabilities that proactively help you manage your network including:

- finding and helping you fix the most common network error conditions (for example, faulty network cabling, and non-standard network topologies)
- informing you of the problem with clear, easy-to-understand messages
- recommending network configuration changes to enhance the performance of your network

The following interfaces provide tests, indicators, and an event log that can be used to monitor the switch and its network connections, and to help you take advantage of these proactive networking features:

- Intelligent Management Center - an SNMP-based network management tool included with your switch
- A graphical web browser interface you can use to manage your switch from a PC that is running a supported web browser, for example Microsoft Internet Explorer.
- A full-featured easy-to-use console interface you can access by merely connecting a standard terminal or PC running a terminal emulator to the switch's console port. The cable to make that connection is provided with your switch. The console interface is also accessible through a telnet connection.

See the "Troubleshooting" chapter in the *Management and Configuration Guide* for more information on using these software tools to diagnose and manage your switch, which is on the HP networking Website. See page 5-1 for details.

Hardware Diagnostic Tests

Reasons for Resetting the Switch

Generally, you only need to reset the switch when it needs to recognize a change in its hardware or software (console) configuration. Some circumstances in which you will need to reset the switch are:

- Changing certain switch configuration parameters through the console interface. (In this case, the console provides indications when the switch must be reset for the configuration change to be activated.)

You do not need to reset the switch when:

- Installing a module in a previously unused slot.
- Replacing a module with the *same* type of module.
- Replacing the module with a different type of module.

Methods of Resetting the Switch

You can reset the switch by any of these methods:

- pressing the System Reset button. On the 5400R zl2 switches, this is the Reset button on the Management Module.
- power cycling the switch (if both power supplies are being used, you will have to disconnect all the power cords)
- issuing the **boot** command from the switch console CLI, or selecting the **Reset** or **Boot** option from the switch console menu, web browser interface, or Intelligent Management Center.

Testing the Switch by Resetting It

If you believe the switch is not operating correctly, you can reset the switch to test its circuitry and operating code. To reset a switch, either:

- Unplug and plug in the power cord (power cycling)
- Press the System Reset button on the front of the switch
- Select the reset or reboot option from the console, web browser interface, or Intelligent Management Center.

Power cycling the switch, pressing the System Reset button, and the software reset or reboot options all cause the switch to perform its power-on self-test, which almost always will resolve any temporary operational problems. These reset processes also cause any network traffic counters to be reset to zero and cause the System Up Time timer to reset to zero. Neither of these reset procedures causes any changes to the switch configuration.

Checking the Switch LEDs

The self-test passes if the Fault and Test LEDs on the front of the switch go off after approximately 90 to 150 seconds depending on the number and type of modules installed in the switch. If these LEDs stay on longer than 180 seconds or begin blinking, the switch, or a module, or an individual transceiver may have to be replaced as indicated by the LEDs.

See “Diagnosing With the LEDs” on page 5-4 for information on interpreting the LED patterns.

Checking Console Messages

Useful diagnostic messages may be displayed on the console screen when the switch is reset. As described in chapter 2 under step 8, “Connect a Console to the Switch”, connect a PC running a VT-100 terminal emulator program or a standard VT-100 terminal to the switch’s Console Port and configure it to run at 9600 baud and with the other terminal communication settings shown on page 2-23. Then, when you reset the switch, note the messages that are displayed.

Testing Twisted-Pair Cabling

If you think the cable should work but still isn't working, it may not be compatible with the IEEE 802.3 Type 10Base-T, 100Base-TX, or 1000Base-T standards, as appropriate for the switch port type that the cable is connected to. The twisted-pair cables attached to the 5400R zl2 switches must be compatible with these standards.To verify your cable is compatible with these standards, use a qualified cable test device.

HP networking also offers a wire testing service. Contact your HP authorized reseller or authorized service provider or your local HP networking sales office for more information.

Testing Switch-to-Device Network Communications

You can perform the following communication tests to verify the network is operating correctly between the switch and any connected device that can respond correctly to the communication test.

- Link Test -- a physical layer test that sends IEEE 802.2 test packets to any device identified by its MAC address
- Ping Test -- a network layer test used on IP networks that sends test packets to any device identified by its IP address

These tests can be performed through the switch console interface from a terminal connected to the switch or through a telnet connection, or from the switch's web browser interface. See the *Management and Configuration Guide* which is on the HP networking Web site. See page 5-1 for details.

These tests can also be performed from an SNMP network management station running a program that can manage the switch, for example, IMC.

Testing End-to-End Network Communications

Both the switch and the cabling can be tested by running an end-to-end communications test -- a test that sends known data from one network device to another through the switch. For example, if you have two PCs on the network that have LAN adapters between which you can run a link-level test or Ping test through the switch, you can use this test to verify the entire communication path between the two PCs is functioning correctly. See your LAN adapter documentation for more information on running the a link test or Ping test.

Restoring the Factory Default Configuration

As part of your troubleshooting process, it may become necessary to return the switch configuration to the factory default settings. This process momentarily interrupts the switch operation, clears any passwords, clears the console event log, resets the network counters to zero, performs a complete self test, and reboots the switch into its factory default configuration including deleting an IP address, if one is configured.

Note

This process removes all switch configuration changes that you have made from the factory default settings. This includes, for example, configuration of VLANs, spanning tree, trunks, stacking, meshing, routing, and security. Returning the configuration of these features to their factory default settings (usually disabling them) may result in network connectivity issues.

If the switch has a valid configuration, and you are restoring the factory default settings for a reason other than configuration problems, you should save the switch configuration prior to performing the factory default reset. Then, after the reset and resolution of the original problem, you can restore the saved configuration to the switch. For both the save and restore processes, you can use the console **copy** command. See the switch *Management and Configuration Guide* which is on the HP networking Web site. See page 5-1 for details.

You can restore the factory default configuration either on the switch itself or through the switch console.

To execute the factory default reset on the switch, perform these steps:

1. Using pointed objects, simultaneously press both the Reset and Clear buttons on the front of the switch.
2. Continue to press the Clear button while releasing the Reset button.
3. As soon as the Test LED begins to flash, release the Clear button.

   The switch will then complete its self test and begin operating with its configuration restored to the factory default settings.

To restore the factory default configuration using the console, execute the **erase startup-config** command from the console command prompt.

Downloading New Software

When product enhancements occur for the 5400R zl2 switches, new software can be downloaded to the switch through several methods, for product enhancements and new features. Please see the *Management and Configuration Guide* which is on the HP networking Web site. See page 5-1 for details.

The new software would be available on the HP networking Web site, **www.hp.com/networking/support**.

HP Customer Support Services

If you are still having trouble with your switch, Hewlett-Packard offers support 24 hours a day, seven days a week through the use of a number of automated electronic services. See the Customer Support/Warranty booklet that came with your switch for information on how to use these services to get technical support. The HP networking Web site, **www.hp.com/networking/support** also provides up-to-date support information.

Additionally, your HP authorized network reseller can provide you with assistance, both with services that they offer and with services offered by HP networking.

Before Calling Support

Before calling your networking dealer or HP Support, to make the support process most efficient, retrieve the following information:

Information Item	Information Location
• product identification, including the chassis, modules, and transceivers	the front of the switch, and on the modules and transceivers
• details about the switch's status including the OS (software) version, a copy of the switch configuration, a copy of the switch Event Log, and a copy of the switch status and counters information	switch console: `show tech` command
• copy of your network topology map, including network addresses assigned to the relevant devices	your network records

Specifications

Physical

Width: 44.45 cm (17.5 in)

Depth: 45.09 cm (17.75 in)

Height:
- 5406R zl2 Switch 17.52 cm (6.9 in)
- 5412R zl2 Switch 30.74 cm (12.1 in)

Weight:
- 5406R zl2 Switch base system(J9821A) 11.11 kg (24.5 lbs)
- 5412R zl2 Switch base system(J9822A) 17.28 kg (38.1 lbs)

Electrical

The HP zl2 Power Supply Specifications:

Electrical	J9828A	J9829A	J9830A	
			Main	Aux
AC voltage:	100 -127 volts; 200 - 240 volts	110 -127 volts; 200 - 240 volts	115-127; 200-240 volts	115-127; 200-240 volts
Maximum current:	8.5; 4.3 A max	12; 6.8 A max	15.5; 10 A max	15.5; 10 A max
Frequency range:	50/60 Hz	50/60 Hz	50/60 Hz	50/60 Hz
PoE output wattage (MAX)*:	275 W	900 W	1100 W	1400 W

Environmental

	Operating	Non-Operating
Temperature:	0°C to 45°C (32°F to 113°F)[1]	-40°C to 70°C (-40°F to 158°F)
Relative humidity: (non-condensing)	15% to 95% at 45°C (113°F)	15% to 95% at 65°C (149°F)
Maximum altitude:	up to 3.1 km (10,000 ft)	4.6 km (15,000 ft)

[1]If you are installing J8177Ctransceiver, the operating ambient temperature must not exceed 40°C (104°F) and must not exceed 35°C (99°F), if FIPS Opacity Shield is installed.

When a J9830A PSU is installed, the temperature rating is reduced to 40°C above 5,000 ft.

Acoustic

5406R zl2 Switch and its bundles:

Geräuschemission LpA = 31.7 dB am fiktiven Arbeitsplatz nach DIN 45635 T.19

Noise Emission LpA = 31.7 dB in a virtual workspace according to DIN 45635 T.19

5412R zl2 Switch and its bundles:

Geräuschemission LpA = 35.7 dB am fiktiven Arbeitsplatz nach DIN 45635 T.19

Noise Emission LpA = 35.7 dB in a virtual workspace according to DIN 45635 T.19

Safety

- EN60950-1 + A11 + A1+ A12
- CSA 22.2 No. 60950-1-07
- UL 60950-1
- IEC 60950-1 + A1

Technology Standards and Safety Compliance

Table A-1. Technology Standards and Safety Compliance

		Laser safety information				
Technology	**Compatible Standards**	**EN/IEC standard compliance**	**SFP Lasers**	**X2 Lasers**	**SFP+ Lasers**	**Media Converter Lasers**
10-T **100-TX** **1000-T** **10GBASE-T**	IEEE 802.3i 10BASE-T IEEE 802.3u 100BASE-TX IEEE 802.3ab 1000BASE-T IEEE 802.3an 10GBASE-T					
2.5G and 5G Twisted-Pair Copper	HP Smart Rate					
100-FX	IEEE 802.3u 100BASE-FX	EN/ IEC60825-1 for all	Class 1 Laser Product Laser Klasse 1			
100-BX	IEEE 802.3ah 100BASE-BX10	EN/IEC 60825	Class 1 Laser Product Laser Klasse 1			
1000-SX	IEEE 802.3z 1000BASE-SX	EN/IEC 60825	Class 1 Laser Product Laser Klasse 1			
1000-LX	IEEE 802.3z 1000BASE-LX	EN/IEC 60825	Class 1 Laser Product Laser Klasse 1			

Table A-1. Technology Standards and Safety Compliance (Continued)

		Laser safety information				
Technology	**Compatible Standards**	**EN/IEC standard compliance**	**SFP Lasers**	**X2 Lasers**	**SFP+ Lasers**	**Media Converter Lasers**
1000-LH		EN/IEC 60825	Class 1 Laser Product Laser Klasse 1			
1000-BX	IEEE 802.3ah 1000BASE-BX10	EN/IEC 60825	Class 1 Laser Product Laser Klasse 1			
10-Gig CX4	IEEE 802.3ak 10GBASE-CX4					
10-Gig Direct Attach						
10-Gig SR	IEEE 802.3ae 10GBASE-SR	EN/IEC 60825		Class 1M Laser Product Laser Klasse 1M	Class 1 Laser Product Laser Klasse 1	
10-Gig LRM	IEEE 802.3aq 10GBASE-LRM	EN/IEC 60825		Class 1 Laser Product Laser Klasse 1	Class 1 Laser Product Laser Klasse 1	
10-Gig LR	IEEE 802.3ae 10GBASE-LR	EN/IEC 60825		Class 1 Laser Product Laser Klasse 1	Class 1 Laser Product Laser Klasse 1	
10-Gig ER	IEEE 802.3ae 10GBASE-ER	EN/IEC 60825		Class 1 Laser Product Laser Klasse 1	Class 1 Laser Product Laser Klasse 1	
CX4 Media Converter		EN/IEC 60825				Class 1M Laser Product Laser Klasse 1M
40-Gig SR4	IEEE 802.3ba 40GBASE-SR4	EN/IEC 60825				Class 1 Laser Product Laser Klasse 1

Table A-1. Technology Standards and Safety Compliance (Continued)

		Laser safety information				
Technology	**Compatible Standards**	**EN/IEC standard compliance**	**SFP Lasers**	**X2 Lasers**	**SFP+ Lasers**	**Media Converter Lasers**
40-Gig eSR4	IEEE 802.3ba 40GBASE-SR4	EN/IEC 60825				Class 1 Laser Product Laser Klasse 1
40-Gig LR4	IEEE 802.3ba 40BASE-LR4	EN/IEC 60825				Class 1 Laser Product Laser Klasse 1

Cabling and Technology Information

Cabling and Technology Information Specifications

Table B-1. Cabling Specifications

Twisted-pair copper	10 Mbps Operation	Category 3, 4, or 5 100-ohm unshielded twisted-pair (UTP) or shielded twisted-pair (STP) cable, complying with IEEE 802.3 10BASE-T specifications.
	100 Mbps Operation	Category 5, 100-ohm UTP or STP cable, complying with IEEE 802.3u 100BASE-TX specifications.
	1 Gbps Operation	Category 5, 100-ohm 4-pair UTP or STP cable, complying with IEEE 802.3ab 1000BASE-T specifications. Category 5e or better is recommended. See note on 1000BASE-T Cable Requirements below.
	2.5 Gbps Operation	Category 5e, 100-ohm 4-pair UTP or STP cable, complying with IEEE 802.3ab 1000BASE-T specifications. See note on HP Smart Rate Cable Requirements below.
	5 Gbps Operation	Category 5e or better, 100-ohm 4-pair UTP or STP cable. Category 6 or better is recommended. See note on HP Smart Rate Cable Requirements below.
	10 Gbps Operation	Category 6 or 6A, 100-ohm 4-pair UTP cable, or Category 6A or 7, 100-ohm 4-pair STP cable, complying with IEEE 802.3an 10GBASE-T specifications. See note on 10GBASE-T Cable Requirements below, and see Table 4 for distances supported with each cable type.
Twinaxial copper	Direct attach cables	One-piece devices consisting of a cable with SFP+ connectors permanently attached to each end, complying with SFF 8431 SFP+ specifications.
Multimode fiber		62.5/125 µm or 50/125 µm (core/cladding) diameter, low metal content, graded index fiber-optic cables, complying with the ITU-T G.651 and ISO/IEC 793-2 Type A1b or A1a standards respectively.[1]
Single mode fiber		9/125 µm (core/cladding) diameter, low metal content fiber-optic cables, complying with the ITU-T G.652 and ISO/IEC 793-2 Type B1 standards.

[1] A mode conditioning patch cord may be needed for some Gigabit-LX and 10-Gigabit LRM installations. See **"Mode Conditioning Patch Cord" on page 6** for more information.

Note on 1000BASE-T Cable Requirements. The Category 5 networking cables that works for 100BASE-TX connections must also work for 1000BASE-T, if all the four-pairs are connected. For the most robust connections, you must use cabling that complies with the Category 5e specifications as described in the ANSI/TIA/EIA 568-C.2 standard.

Because of the increased speed provided by 1000BASE-T, network cable quality is more important for either 10BASE-T or 100BASE-TX. The cabling plants used to carry 1000BASE-T networking must comply with the IEEE 802.3ab standard. In particular, the cabling must pass tests for Attenuation, Near-End Crosstalk (NEXT), and Far-End Crosstalk (FEXT). Additionally, cables for 1000BASE-T must pass tests for Equal-Level Far-End Crosstalk (ELFEXT) and Return Loss.

When testing cabling, you must ensure to include the patch cords that connect the switch and other end devices to the patch panels on the site. The patch cords are frequently overlooked when testing the cable plant, and they must also comply with the cabling standards.

Note on HP Smart Rate 2.5 Gb/s Cable Requirements. The 2.5Gb/s Smart Rate operates on cable installations that are designed to support 1000BASE-T operation. The cabling installation must meet the 1000BASE-T link segment characteristics described in IEEE 802.3-2012 and additionally the Category 5e or Class D limits described in the ANSI/TIA/EIA 568-C.2 and ISO/IEC 11801 standards, respectively.

Note on HP Smart Rate 5 Gb/s Cable Requirements. The 5 Gb/s Smart Rate operates on the majority of Category 5e and Category 6 cable installations. Category 5e or Class D installations must meet ANSI/TIA/EIA 568-C.2 or ISO/IEC 11801 transmission parameter limits extended to 200MHz. Category 6 or Class E installations must meet their respective transmission parameter limits as described in ANSI/TIA/EIA 568-C.2 or ISO/IEC 11801.

Also, to transmission performance, 5 Gb/s Smart Rate can be sensitive to alien noise from other cables in close proximity or background noise from the environment. Therefore, cabling must additionally be tested for Alien Near-End Crosstalk (ANEXT) and Alien Equal-Level Far-End Crosstalk (AELFEXT). Depending on the cabling installation, the magnitude of alien crosstalk may further limit the maximum supported cabling distance.

It is recommended that cable dressing be done carefully and in compliance with recommendations in the TIA TSB-155-A and ISO/IEC TR-24750.

Note on 10GBASE-T Cable Requirements. The Category 6 networking cables that work for 1000BASE-T connections may work for 10GBASE-T, as long as the distance is less than 55m and the cable installation has been tested for compliance to IEEE requirements. But, for the most robust connections, you must use cabling that complies with the Category 6A or Category 7 specifications, as described in the TIA-568-C (ANSI/TIA-568-C.2) and ISO/IEC 11801 standards.

10GBASE-T is a sophisticated technology that relies upon high quality cable installations. It is sensitive to Alien Near-End Crosstalk (ANEXT) which can arrive upon the cable due to cables placed in close proximity to the data cables. HP recommends that cable dressing be done carefully and in compliance with recommendations in the TIA TSB-155A.

Like 1000BASE-T, 10GBASE-T requires testing of all the crosstalk and return loss parameters described above, and also ANEXT.

In addition to ANEXT, 10GBASE-T is more sensitive to external electrical noise in the environment. HP recommends that radio transmitters and other sources of high frequency continuous wave radio frequency be kept away from LAN cables.

When testing your cabling, you must ensure to include the patch cables that connect the switch and other end devices to the patch panels on your site. The patch cables are frequently overlooked when testing cable and they must also comply with the cabling standards. For 10GBASE-T, Category 6 patch cables are sensitive to movement once link has been established, and could cause link to drop if moved. Therefore, HP recommends using Category 6A patch cables, or using cable management options to tie down (dress) the Category 6 patch cables so they cannot move.

Technology Distance Specifications

Table B-2.

Technology	Supported cable type	Multimode fiber modal bandwidth	Supported distances
100-FX	multimode fiber	any	up to 2,000 meters
100-BX	single mode fiber	N/A	0.5 - 10,000 meters
1000-T	twisted-pair copper	N/A	up to 100 meters
2.5Gb/s HP Smart Rate	twisted-pair copper	N/A	up to 100 meters
5Gb/s HP Smart Rate	twisted-pair copper	N/A	Cat 5e - up to 100 meters[1] Cat 6 - up to 100 meters[2] Cat 6A - up to 100 meters

Table B-2.

Technology	Supported cable type	Multimode fiber modal bandwidth	Supported distances
10GBASE-T	twisted-pair copper	N/A	Cat 6 unshielded - up to 55 meters[3] Cat 6 shielded - up to 100 meters[3] Cat 6A unshielded - up to 100 meters Cat 6A shielded - up to 100 meters Cat 7 shielded - up to 100 meters
1000-SX	multimode fiber	160 MHz*km 200 MHz*km 400 MHz*km 500 MHz*km	2 - 220 meters 2 - 275 meters 2 - 500 meters 2 - 550 meters
1000-LX	multimode fiber single mode fiber	400 MHz*km 500 MHz*km N/A	2 - 550 meters 2 - 550 meters 2 - 10,000 meters
1000-LH	single mode fiber	N/A	10 - 70,000 meters[4]
1000-BX	single mode fiber	N/A	0.5 - 10,000 meters
10-Gig CX4	twinaxial copper	N/A	up to 15 meters
10-Gig Direct Attach	twinaxial copper	N/A	(various lengths offered)
10-Gig SR	multimode fiber	160 MHz*km 200 MHz*km 400 MHz*km 500 MHz*km 2000 MHz*km 4700 MHz*km	2 - 26 meters 2 - 33 meters 2 - 66 meters 2 - 82 meters 2 - 300 meters 2 - 400 meters
10-Gig LRM	multimode fiber	400 MHz*km 500 MHz*km	0.5 - 100 meters 0.5 - 220 meters
10-Gig LR	single mode fiber	N/A	2 - 10,000 meters
10-Gig ER	single mode fiber	N/A	2 - 40,000 meters
CX4 Media Converter	12-strand female-female multi-mode fiber MPO ribbon cable with MTP connectors, in a crossover (key up/key up) configuration	150 MHz*km 500 MHz*km 2000 MHz*km	1 - 50 meters 1 - 100 meters 1 - 300 meters
40-Gig SR4	single mode fiber	2000 MHz*km 4700 MHz*km	2- 100 meters 2- 150 meters

Table B-2.

Technology	Supported cable type	Multimode fiber modal bandwidth	Supported distances
40-Gig ESR4	multimode fiber	2000 MHz*km 4700 MHz*km	2- 300 meters 2- 400 meters
40-Gig LR4	single mode fiber	NA	2- 10,000 meters

[1]Cat 5e cabling requires testing to 200 MHz operation and additionally for ANEXT and AELFEXT. The maximum supported distances may be reduced depending on alien crosstalk levels. The support for untested cable installations is best-effort.

[2]Cat 6 cabling requires testing for ANEXT and AELFEXT. The maximum supported distances may be reduced depending on alien crosstalk levels.

[3] Cat 6 cabling requires TIA TSB-155A testing for 500 MHz operation and ANEXT.

[4] For distances less than 20km, a 10dB attenuator must be used. For distances between 20km and 40km, a 5dB attenuator must be used. Attenuators can be purchased from most cable vendors.

Mode Conditioning Patch Cord

The following information applies to installations in which multimode fiber-optic cables are connected to a Gigabit-LX port or a 10-Gigabit LRM port. Multimode cable has a design characteristic called "Differential Mode Delay", which requires the transmission signals be "conditioned" to compensate for the cable design and thus prevent resulting transmission errors.

Under certain circumstances, depending on the cable used and the lengths of the cable runs, an external Mode Conditioning Patch Cord may need to be installed between the Gigabit-LX or 10-Gigabit LRM transmitting device and the multimode network cable to provide the transmission conditioning. If you experience a high number of transmission errors on those ports, usually CRC or FCS errors, you may need to install one of these patch cords between the fiber-optic port in your switch and your multimode fiber-optic network cabling, at both ends of the network link.

The patch cord consists of a short length of single mode fiber cable coupled to graded-index multimode fiber cable on the transmit side, and only multimode cable on the receive side. The section of single mode fiber is connected in such a way that it minimizes the effects of the differential mode delay in the multimode cable.

Note

Most of the time, if you are using good quality graded-index multimode fiber cable that adheres to the standards listed in Appendix B, there should not be a need to use mode conditioning patch cords in your network. This is especially true if the fiber runs in your network are relatively short.

For 10-Gigabit LRM using OM3 cable (50 µm multimode @ 1500/500 MHz*km), a mode conditioning patch cord is not required. Other multimode cables may require mode conditioning patch cords to achieve the LRM maximum distances.

Installing the Patch Cord

As shown in the illustration below, connect the patch cord to the transceiver with the section of single mode fiber plugged in to the Tx (transmit) port. Then, connect the other end of the patch cord to your network cabling patch panel, or directly to the network multimode fiber.

If you connect the patch cord directly to the network cabling, you may need to install a female-to-female adapter to allow the cables to be connected together.

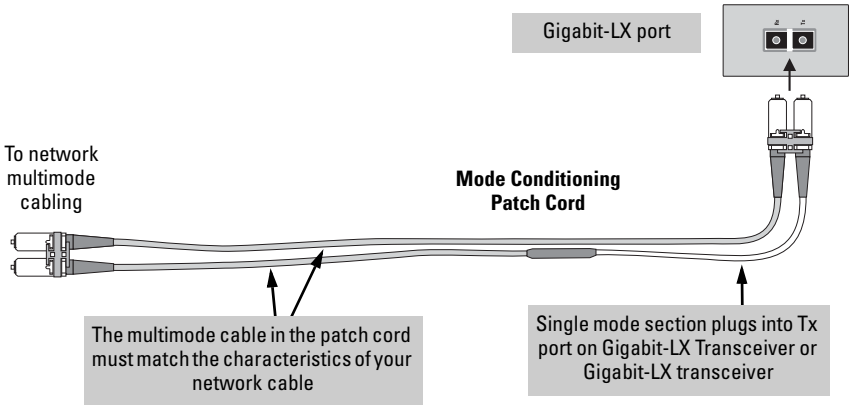

Figure B-1. Example: Connecting a Mode Conditioning Patch Cord for Gigabit-LX

Make sure you purchase a patch cord that has appropriate connectors on each end, and has multimode fibers that match the characteristics of the multimode fiber in your network. Most important, the core diameter of the multimode patch cord must match the core diameter of the multimode cable infrastructure (either 50 or 62.5 microns).

Twisted-Pair Cable/Connector Pin-Outs

The HP Auto-MDIX Feature. In the **default configuration**, "Auto", the 10/100Base-TX ports on the 10/100-TX and PoE Modules used in the 5400R zl2 Switches all automatically detect the type of port on the connected device and operate as either an MDI or MDI-X port, whichever is appropriate. So for any connection, a straight-through twisted-pair cable can be used – *you no longer have to use crossover cables*, although crossover cables may also be used for any of the connections. The 100/1000-T Module supports the IEEE 802.3ab standard, which includes the "Auto MDI/MDI-X" feature, which operates the same way.

Note

HP Auto-MDIX was developed and shared with the IEEE for the development of the IEEE 802.3ab standard. HP Auto-MDIX and the IEEE 802.3ab Auto MDI/MDI-X feature are completely compatible.

If you connect a 5400R zl2 Switch twisted-pair port to another switch or hub, which typically have MDI-X ports, the 5400R zl2 Switch port automatically operates as an MDI port. If you connect it to an end node, such as a server or PC, which typically have MDI ports, the 5400R zl2 Switch port operates as an MDI-X port. In all cases, you can use standard straight through cables.

If you happen to use a correctly wired crossover cable, though, the switch will still be able to automatically detect the MDI/MDI-X operation and link correctly to the connected device.

If the port configuration is changed to any of the **fixed configurations** though, for example 100 Mbps/full duplex, the port operates as **MDI-X only** and the correct cable type must be used. In general, for connections to MDI ports, such as end nodes, use a straight-through cable; for connections to MDI-X ports, such as on hubs and other switches, use a crossover cable.

Other Wiring Rules:

- All twisted-pair wires used for 10 Mbps, and 100 Mbps operation must be twisted through the entire length of the cable. The wiring sequence must conform to EIA/TIA 568-B (not USOC). See the Pin Assignment tables below the cable illustrations later in this appendix for a listing of the signals used on each pin.
- For 1000Base-T connections, all four pairs of wires in the cable must be available for data transmission. See "Note on 1000Base-T Cable Requirements" on page B-2 for more information on 1000Base-T cabling.

- For 10 Mbps connections to the ports, you can use Category 3, 4, or 5 100-ohm differential unshielded twisted-pair (UTP) or shielded twisted-pair (STP) cable, as supported by the IEEE 802.3 10Base-T standard.
- For 100 Mbps connections to the ports, use Category 5 100-ohm differential UTP or STP cable only, as supported by the IEEE 802.3u 100Base-TX standard.
- For 1000 Mbps connections, Category 5 or better 100-ohm differential UTP or STP cable only, as supported by the IEEE 802.3ab 1000Base-T standard; Category 5e or better is recommended.

Straight-Through Twisted-Pair Cable for 10 Mbps or 100 Mbps Network Connections

Because of the HP Auto-MDIX operation of the 10/100 ports on the switches, for all network connections, to PCs, servers or other end nodes, or to hubs or other switches, you can use straight-through cables.

If any of these ports are given a fixed configuration, for example 100 Mbps/ Full Duplex, the ports operate as MDI-X ports, and straight-through cables *must* be then used for connections to PC NICs and other MDI ports.

Cable Diagram

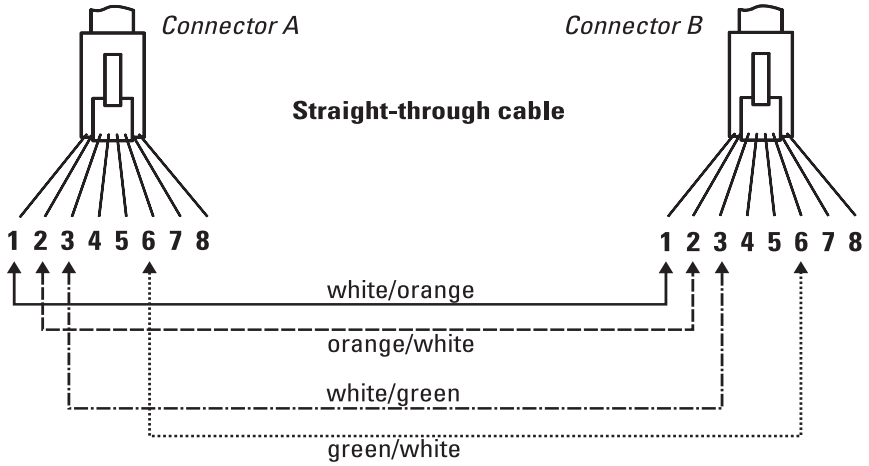

Figure B-2. Straight-through Cable Diagram for 10/100 Mbps Network Connection

Note

Pins 1 and 2 on connector "A" *must* be wired as a twisted pair to pins 1 and 2 on connector "B".
Pins 3 and 6 on connector "A" *must* be wired as a twisted pair to pins 3 and 6 on connector "B".
Pins 4, 5, 7, and 8 are not used in this application, although they may be wired in the cable.

Pin Assignments

Switch End (MDI-X)		Computer, Transceiver, or Other End (MDI)	
Signal	**Pins**	**Pins**	**Signal**

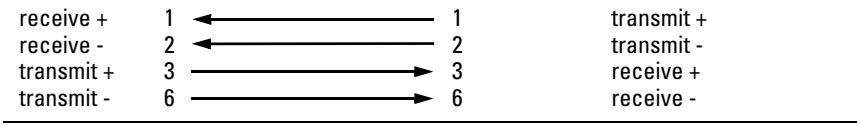
receive +
1
1
transmit +
receive -
2
2
transmit -
transmit +
3
3
receive +
transmit -
6
6
receive -

Crossover Twisted-Pair Cable for 10 Mbps or 100 Mbps Network Connection

The HP Auto-MDIX operation of the 10/100 ports on the switches also allows you to use crossover cables for all network connections, to PCs, servers or other end nodes, or to hubs or other switches.

If any of these ports are given a fixed configuration, for example 100 Mbps/ Full Duplex, the ports operate as MDI-X ports, and crossover cables *must* be then used for connections to hubs or switches or other MDI-X network devices.

Cable Diagram

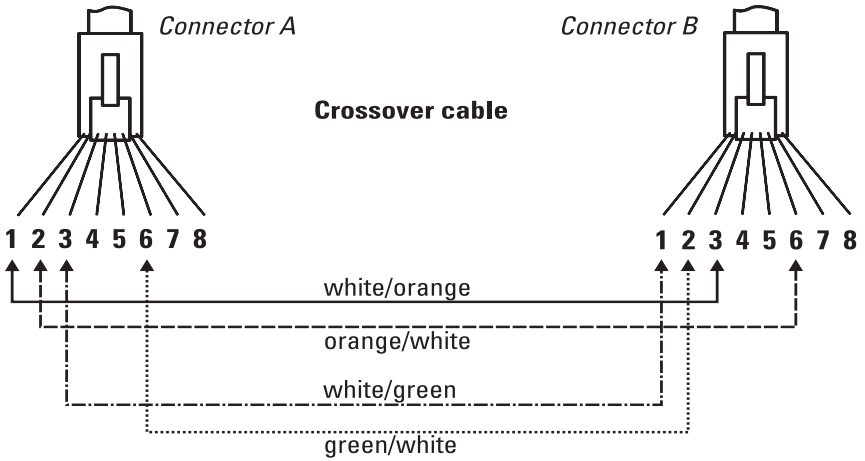

Figure B-3. Cross-over Cable Diagram for 10/100 Mbps Network Connection

Note

Pins 1 and 2 on connector "A" *must* be wired as a twisted pair to pins 3 and 6 on connector "B".
Pins 3 and 6 on connector "A" *must* be wired as a twisted pair to pins 1 and 2 on connector "B".
Pins 4, 5, 7, and 8 are not used in this application, although they may be wired in the cable.

Pin Assignments

Switch End (MDI-X)		Hub or Switch Port, or Other MDI-X Port End	
Signal	**Pins**	**Pins**	**Signal**

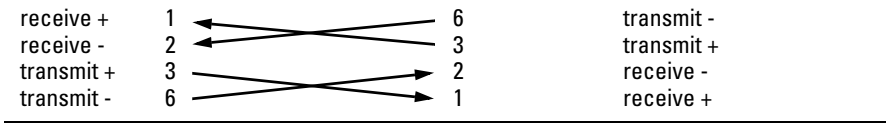
receive +
1
6
transmit -
receive -
2
3
transmit +
transmit +
3
2
receive -
transmit -
6
1
receive +

Straight-Through Twisted-Pair Cable for 1000 Mbps Network Connections

1000Base-T connections require that all four pairs or wires be connected.

Cable Diagram

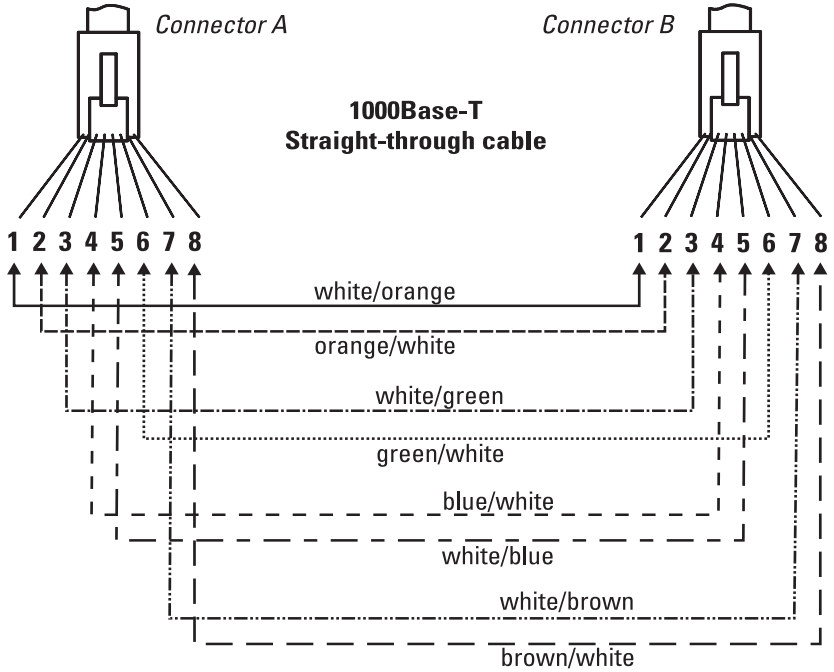

Figure B-4. Straight-through Cable Diagram for 1000 Mbps Network Connection

Note

Pins 1 and 2 on connector "A" *must* be wired as a twisted pair to pins 1 and 2 on connector "B".
Pins 3 and 6 on connector "A" *must* be wired as a twisted pair to pins 3 and 6 on connector "B".
Pins 4 and 5 on connector "A" *must* be wired as a twisted pair to pins 4 and 5 on connector "B".
Pins 7 and 8 on connector "A" *must* be wired as a twisted pair to pins 7 and 8 on connector "B".

Pin Assignments

For 1000Base-T operation, all four pairs of wires are used for both transmit and receive.

Safety and Regulatory Statements

Safety Information



Documentation reference symbol. If the product is marked with this symbol, refer to the product documentation to get more information about the product.

WARNING A **WARNING** in the manual denotes a hazard that can cause injury or death.

Caution A Caution in the manual denotes a hazard that can damage equipment.

Do not proceed beyond a **WARNING** or Caution notice until you have understood the hazardous conditions and have taken appropriate steps.

Grounding
These are safety class I products and have protective earthing terminals. There must be an uninterruptible safety earth ground from the main power source to the product's input wiring terminals, power cord, or supplied power cord set. Whenever it is likely that the protection has been impaired, disconnect the power cord until the ground has been restored.

For LAN cable grounding:

- If your LAN covers an area served by more than one power distribution system, be sure their safety grounds are securely interconnected.
- LAN cables may occasionally be subject to hazardous transient voltages (such as lightning or disturbances in the electrical utilities power grid). Handle exposed metal components of the network with Caution.

Servicing
There are no user-serviceable parts inside these products. Any servicing, adjustment, maintenance, or repair must be performed only by service-trained personnel.

These products do not have a power switch; they are powered on when the power cord is plugged in.

Informations concernant la sécurité



Symbole de référence à la documentation. Si le produit est marqué de ce symbole, reportez-vous à la documentation du produit afin d'obtenir des informations plus détaillées.

WARNING Dans la documentation, un **WARNING** indique un danger susceptible d'entraîner des dommages corporels ou la mort.

Caution Un texte de mise en garde intitulé Caution indique un danger susceptible de causer des dommages à l'équipement.

Ne continuez pas au-delà d'une rubrique **WARNING** ou Caution avant d'avoir bien compris les conditions présentant un danger et pris les mesures appropriées.

Cet appareil est un produit de classe I et possède une borne de mise à la terre. La source d'alimentation principale doit être munie d'une prise de terre de sécurité installée aux bornes du câblage d'entrée, sur le cordon d'alimentation ou le cordon de raccordement fourni avec le produit. Lorsque cette protection semble avoir été endommagée, débrancher le cordon d'alimentation jusqu'à ce que la mise à la terre ait été réparée.

Mise à la terre du câble de réseau local:

- si votre réseau local s'étend sur une zone desservie par plus d'un système de distribution de puissance, assurez-vous que les prises de terre de sécurité soient convenablement interconnectées.
- Les câbles de réseaux locaux peuvent occasionnellement être soumis à des surtensions transitoires dangereuses (telles que la foudre ou des perturbations dans le réseau d'alimentation public). Manipulez les composants métalliques du réseau avec précautions.

Aucune pièce contenue à l'intérieur de ce produit ne peut être réparée par l'utilisateur. Tout dépannage, réglage, entretien ou réparation devra être confié exclusivement à un personnel qualifié.

Cet appareil ne comporte pas de commutateur principal ; la mise sous tension est effectuée par branchement du cordon d'alimentation.

Hinweise zur Sicherheit



Symbol für Dokumentationsverweis. Wenn das Produkt mit diesem Symbol markiert ist, schlagen Sie bitte in der Produktdokumentation nach, um mehr Informationen über das Produkt zu erhalten.

WARNING Symbol für Dokumentationsverweis. Wenn das Produkt mit diesem Symbol markiert ist, schlagen Sie bitte in der Produktdokumentation nach, um mehr Informationen über das Produkt zu erhalten.

Caution Symbol für Dokumentationsverweis. Wenn das Produkt mit diesem Symbol markiert ist, schlagen Sie bitte in der Produktdokumentation nach, um mehr Informationen über das Produkt zu erhalten.

Fahren Sie nach dem Hinweis WARNING oder Caution erst fort, nachdem Sie den Gefahrenzustand verstanden und die entsprechenden Maßnahmen ergriffen haben.

Dies ist ein Gerät der Sicherheitsklasse I und verfügt über einen schützenden Erdungsterminal. Der Betrieb des Geräts erfordert eine ununterbrochene Sicherheitserdung von der Hauptstromquelle zu den Geräteingabeterminals, den Netzkabeln oder dem mit Strom belieferten Netzkabelsatz voraus. Sobald Grund zur Annahme besteht, daß der Schutz beeinträchtigt worden ist, das Netzkabel aus der Wandsteckdose herausziehen, bis die Erdung wiederhergestellt ist.

Für LAN-Kabelerdung:

- Wenn Ihr LAN ein Gebiet umfaßt, das von mehr als einem Stromverteilungssystem beliefert wird, müssen Sie sich vergewissern, daß die Sicherheitserdungen fest untereinander verbunden sind.
- LAN-Kabel können gelegentlich gefährlichen Übergangsspannungen ausgesetzt werden (beispielsweise durch Blitz oder Störungen in dem Starkstromnetz des Elektrizitätswerks). Bei der Handhabung exponierter Metallbestandteile des Netzwerkes Vorsicht walten lassen.

Dieses Gerät enthält innen keine durch den Benutzer zu wartenden Teile. Wartungs-, Anpassungs-, Instandhaltungs- oder Reparaturarbeiten dürfen nur von geschultem Bedienungspersonal durchgeführt werden.

Dieses Gerät hat keinen Netzschalter; es wird beim Anschließen des Netzkabels eingeschaltet.

Considerazioni sulla sicurezza



Simbolo di riferimento alla documentazione. Se il prodotto è contrassegnato da questo simbolo, fare riferimento alla documentazione sul prodotto per ulteriori informazioni su di esso.

WARNING La dicitura **WARNING** denota un pericolo che può causare lesioni o morte.

Caution La dicitura Caution denota un pericolo che può danneggiare le attrezzature.

Non procedere oltre un avviso di **WARNING** o di Caution prima di aver compreso le condizioni di rischio e aver provveduto alle misure del caso.

Questo prodotto è omologato nella classe di sicurezza I ed ha un terminale protettivo di collegamento a terra. Dev'essere installato un collegamento a terra di sicurezza, non interrompibile che vada dalla fonte d'alimentazione principale ai terminali d'entrata, al cavo d'alimentazione oppure al set cavo d'alimentazione fornito con il prodotto. Ogniqualvolta vi sia probabilità di danneggiamento della protezione, disinserite il cavo d'alimentazione fino a quando il collegaento a terra non sia stato ripristinato.

Per la messa a terra dei cavi LAN:

- se la vostra LAN copre un'area servita da più di un sistema di distribuzione elettrica, accertatevi che i collegamenti a terra di sicurezza siano ben collegati fra loro;
- i cavi LAN possono occasionalmente andare soggetti a pericolose tensioni transitorie (ad esempio, provocate da lampi o disturbi nella griglia d'alimentazione della società elettrica); siate cauti nel toccare parti esposte in metallo della rete.

Nessun componente di questo prodotto può essere riparato dall'utente. Qualsiasi lavoro di riparazione, messa a punto, manutenzione o assistenza va effettuato esclusivamente da personale specializzato.

Questo apparato non possiede un commutatore principale; si mette scotto tensione all'inserirsi il cavo d'alimentazione.

Consideraciones sobre seguridad



Símbolo de referencia a la documentación. Si el producto va marcado con este símbolo, consultar la documentación del producto a fin de obtener mayor información sobre el producto.

WARNING Una **WARNING** en la documentación señala un riesgo que podría resultar en lesiones o la muerte.

Caution Una Caution en la documentación señala un riesgo que podría resultar en averías al equipo.

No proseguir después de un símbolo de **WARNING** o Caution hasta no haber entendido las condiciones peligrosas y haber tomado las medidas apropiadas.

Este aparato se enmarca dentro de la clase I de seguridad y se encuentra protegido por una borna de puesta a tierra. Es preciso que exista una puesta a tierra continua desde la toma de alimentación eléctrica hasta las bornas de los cables de entrada del aparato, el cable de alimentación o el juego de cable de alimentación suministrado. Si existe la probabilidad de que la protección a tierra haya sufrido desperfectos, desenchufar el cable de alimentación hasta haberse subsanado el problema.

Puesta a tierra del cable de la red local (LAN):

- Si la LAN abarca un área cuyo suministro eléctrico proviene de más de una red de distribución de electricidad, cerciorarse de que las puestas a tierra estén conectadas entre sí de modo seguro.
- Es posible que los cables de la LAN se vean sometidos de vez en cuando a voltajes momentáneos que entrañen peligro (rayos o alteraciones en la red de energía eléctrica). Manejar con precaución los componentes de metal de la LAN que estén al descubierto.

Este aparato no contiene pieza alguna susceptible de reparación por parte del usuario. Todas las reparaciones, ajustes o servicio de mantenimiento debe realizarlos solamente el técnico.

Este producto no tiene interruptor de potencia; se activa cuando se enchufa el cable de alimentación.

Informações de Segurança



Símbolo de referência à documentação. Se o produto estiver marcado com este símbolo, consulte a documentação do produto para obter mais informações sobre ele.

AVISO Um **AVISO** no manual indica um perigo que possa causar ferimentos ou morte.

Cuidado Um Cuidado no manual indica um perigo que possa danificar o equipamento.

Não passe por um **AVISO** ou uma indicação de Cuidado sem entender as condições de perigo e tomar as atitudes apropriadas.

Aterramento
Estes são produtos de classe de segurança I, e contam com terminais de aterramento protetores. É preciso haver um aterramento de segurança ininterrupto da principal fonte de energia até os terminais de ligação de entrada, o cabo de alimentação ou o conjunto de cabo de alimentação do produto. Sempre que parecer provável que a proteção tenha sido danificada, desconecte o cabo de alimentação até que o aterramento seja restaurado.

Para aterramento de cabo de LAN:

- Caso sua LAN cubra uma área servida por mais de um sistema de distribuição de energia, certifique-se de que os aterramentos de segurança deles estejam interconectados com segurança.
- Os cabos de LAN podem ocasionalmente estar sujeitos a tensões transitórias perigosas (como raios ou perturbações na rede de energia). Tenha cuidado ao manipular componentes metálicos da rede.

Manutenção
Não há peças internas que possam sofrer manutenção pelo usuário nestes produtos. Qualquer manutenção, ajuste ou reparo deve ser realizado apenas por pessoal treinado.

Estes produtos não têm um botão liga/desliga; eles são ativados quando o cabo de alimentação é conectado.

Safety Information (Japan)

安全性の考慮

安全記号



マニュアル参照記号。製品にこの記号がついている場合はマニュアルを参照し、注意事項等をご確認ください。

WARNING　マニュアル中の「WARNING」は人身事故の原因となる危険を示します。

CAUTION　マニュアル中の「CAUTION」は装置破損の原因となる危険を示します。

「WARNING」や「CAUTION」の項は飛ばさないで必ずお読みください。危険性に関する記載事項をよく読み、正しい手順に従った上で次の事項に進んでください。

これは安全性クラスIの製品で保護用接地端子を備えています。主電源から製品の入力配線端子、電源コード、または添付の電源コード・セットまでの間、切れ目のない安全接地が存在することが必要です。もしこの保護回路が損なわれたことが推測されるときは、接地が修復されるまで電源コードを外しておいてください。

LAN ケーブルの接地に関して:

- もし貴社の LAN が複数の配電システムにより電力を受けている領域をカバーしている場合には、それらのシステムの安全接地が確実に相互に結合されていることを確認してください。
- LAN ケーブルは時として危険な過度電圧（例えば雷や、配電設備の電力網での障害）にさらされることがあります。露出した金属部分の取扱いには十分な注意をはらってください。

本製品の内部にはユーザーが修理できる部品はありません。サービス、調整、保守および修理はサービス訓練を受けた専門家におまかせください。

本製品には電源スイッチがありません。電源コードを接続したとき電源入となります。

Safety Information (China)

HP网络产品使用安全手册

使用须知

欢迎使用惠普网络产品，为了您及仪器的安全，请您务必注意如下事项:

1. 仪器要和地线相接，要使用有正确接地插头的电源线，使用中国国家规定 的220V 电源.
2. 避免高温和尘土多的地方，否则易引起仪器内部部件的损坏.
3. 避免接近高温，避免接近直接热源，如直射太阳光、暖气等其它发热体.
4. 不要有异物或液体落入机内，以免部件短路.
5. 不要将磁体放置于仪器附近.

警告

为防止火灾或触电事故，请不要将该机放置于淋雨或潮湿处.

安装

安装辅助管理模块，请参看安装指南.

保修及技术支持

如果您按照以上步骤操作时遇到了困难，或想了解其它产品性能，请按以下 方式与我们联络.

如是硬件故障:

1. 与售出单位或当地维修机构联系.
2. 中国惠普有限公司维修中心地址:
   北京市海淀区知春路49号希格玛大厦
   联系电话: 010-62623888 转 6101
   邮政编码: 100080

如是软件问题:

1. 惠普用户响应中心热线电话: 010-65645959
2. 传真自动回复系统: 010-65645735

EMC Regulatory Statements

U.S.A.

FCC Class A

This equipment has been tested and found to comply with the limits for a Class A digital device, pursuant to Part 15 of the FCC Rules. These limits are designed to provide reasonable protection against interference when the equipment is operated in a commercial environment. This equipment generates, uses, and can radiate radio frequency energy and, if not installed and used in accordance with the instruction manual, may cause interference to radio communications. Operation of this equipment in a residential area may cause interference in which case the user will be required to correct the interference at his own expense.

Canada

This product complies with Class A Canadian EMC requirements.

Australia/New Zealand



This product complies with Australia/New Zealand EMC Class A requirements.

Warning This is a Class A product. In a domestic environment this product may cause radio interference in which case the user may be required to take adequate measures.

Japan

VCCI Class A

この装置は，クラスA情報技術装置です。この装置を家庭環境で使用すると電波妨害を引き起こすことがあります。この場合には使用者が適切な対策を講ずるよう要求されることがあります。 VCCI－A

Korea

A급 기기 (업무용 방송통신기기)	이 기기는 업무용(A급)으로 전자파적합등록을 한 기기이오니 판매자 또는 사용자는 이 점을 주의하시기 바라며, 가정 외의 지역에서 사용하는 것을 목적으로 합니다.

Taiwan

警告使用者：這是甲類的資訊產品，在居住的環境中使用時，可能會造成射頻干擾，在這種情況下，使用者會被要求採取某些適當的對策。

Regulatory Model Identification Number

For regulatory identification purposes, the HP 5400R zl2 Switches are assigned a Regulatory Model Number. The Regulatory Model Number for these switches is RSVLC-1301.

This regulatory number should not be confused with the marketing name (HP 5400R zl2 Switches), or product numbers (J8697A, J8698A, J8699A, and J8700A).

Recycle Statements

Waste Electrical and Electronic Equipment (WEEE) Statements



Disposal of Waste Equipment by Users in Private Household in the European Union

This symbol on the product or on its packaging indicates that this product must not be disposed of with your other household waste. Instead, it is your responsibility to dispose of your waste equipment by handing it over to a designated collection point for the recycling of waste electrical and electronic equipment. The separate collection and recycling of your waste equipment at the time of disposal will help to conserve natural resources and ensure that it is recycled in a manner that protects human health and the environment. For more information about where you can drop off your waste equipment for recycling, please contact your local city office, your household waste disposal service or the shop where you purchased the product.



Likvidace zařízení soukromými domácími uživateli v Evropské unii

Tento symbol na produktu nebo balení označuje výrobek, který nesmí být vyhozen spolu s ostatním domácím odpadem. Povinností uživatele je předat takto označený odpad na předem určené sběrné místo pro recyklaci elektrických a elektronických zařízení. Okamžité třídění a recyklace odpadu pomůže uchovat přírodní prostředí a zajistí takový způsob recyklace, který ochrání zdraví a životní prostředí člověka. Další informace o možnostech odevzdání odpadu k recyklaci získáte na příslušném obecním nebo městském úřadě, od firmy zabývající se sběrem a svozem odpadu nebo v obchodě, kde jste produkt zakoupili.



Bortskaffelse af affald fra husstande i den Europæiske Union

Hvis produktet eller dets emballage er forsynet med dette symbol, angiver det, at produktet ikke må bortskaffes med andet almindeligt husholdningsaffald. I stedet er det dit ansvar at bortskaffe kasseret udstyr ved at aflevere det på den kommunale genbrugsstation, der forestår genvinding af kasseret elektrisk og elektronisk udstyr. Den centrale modtagelse og genvinding af kasseret udstyr i forbindelse med bortskaffelsen bidrager til bevarelse af naturlige ressourcer og sikrer, at udstyret genvindes på en måde, der beskytter både mennesker og miljø. Yderligere oplysninger om, hvor du kan aflevere kasseret udstyr til genvinding, kan du få hos kommunen, den lokale genbrugsstation eller i den butik, hvor du købte produktet.



Seadmete jäätmete kõrvaldamine eramajapidamistes Euroopa Liidus

See tootel või selle pakendil olev sümbol näitab, et kõnealust toodet ei tohi koos teiste majapidamisjäätmetega kõrvaldada. Teie kohus on oma seadmete jäätmed kõrvaldada, viies need elektri- ja elektroonikaseadmete jäätmete ringlussevõtmiseks selleks ettenähtud kogumispunkti. Seadmete jäätmete eraldi kogumine ja ringlussevõtmine kõrvaldamise ajal aitab kaitsta loodusvarasid ning tagada, et ringlussevõtmine toimub viisil, mis kaitseb inimeste tervist ning keskkonda. Lisateabe saamiseks selle kohta, kuhu oma seadmete jäätmed ringlussevõtmiseks viia, võtke palun ühendust oma kohaliku linnakantselei, majapidamisjäätmete kõrvaldamise teenistuse või kauplusega, kust Te toote ostsite.



Laitteiden hävittäminen kotitalouksissa Euroopan unionin alueella

Jos tuotteessa tai sen pakkauksessa on tämä merkki, tuotetta ei saa hävittää kotitalousjätteiden mukana. Tällöin hävitettävä laite on toimitettava sähkölaitteiden ja elektronisten laitteiden kierrätyspisteeseen. Hävitettävien laitteiden erillinen käsittely ja kierrätys auttavat säästämään luonnonvaroja ja varmistamaan, että laite kierrätetään tavalla, joka estää terveyshaitat ja suojelee luontoa. Lisätietoja paikoista, joihin hävitettävät laitteet voi toimittaa kierrätettäväksi, saa ottamalla yhteyttä jätehuoltoon tai liikkeeseen, josta tuote on ostettu.



Élimination des appareils mis au rebut par les ménages dans l'Union européenne

Le symbole apposé sur ce produit ou sur son emballage indique que ce produit ne doit pas être jeté avec les déchets ménagers ordinaires. Il est de votre responsabilité de mettre au rebut vos appareils en les déposant dans les centres de collecte publique désignés pour le recyclage des équipements électriques et électroniques. La collecte et le recyclage de vos appareils mis au rebut indépendamment du reste des déchets contribue à la préservation des ressources naturelles et garantit que ces appareils seront recyclés dans le respect de la santé humaine et de l'environnement. Pour obtenir plus d'informations sur les centres de collecte et de recyclage des appareils mis au rebut, veuillez contacter les autorités locales de votre région, les services de collecte des ordures ménagères ou le magasin dans lequel vous avez acheté ce produit.



Entsorgung von Altgeräten aus privaten Haushalten in der EU

Das Symbol auf dem Produkt oder seiner Verpackung weist darauf hin, dass das Produkt nicht über den normalen Hausmüll entsorgt werden darf. Benutzer sind verpflichtet, die Altgeräte an einer Rücknahmestelle für Elektro- und Elektronik-Altgeräte abzugeben. Die getrennte Sammlung und ordnungsgemäße Entsorgung Ihrer Altgeräte trägt zur Erhaltung der natürlichen Ressourcen bei und garantiert eine Wiederverwertung, die die Gesundheit des Menschen und die Umwelt schützt. Informationen dazu, wo Sie Rücknahmestellen für Ihre Altgeräte finden, erhalten Sie bei Ihrer Stadtverwaltung, den örtlichen Müllentsorgungsbetrieben oder im Geschäft, in dem Sie das Gerät erworben haben



Απόρριψη άχρηστου εξοπλισμού από χρήστες σε ιδιωτικά νοικοκυριά στην Ευρωπαϊκή Ένωση

Το σύμβολο αυτό στο προϊόν ή τη συσκευασία του υποδεικνύει ότι το συγκεκριμένο προϊόν δεν πρέπει να διατίθεται μαζί με τα άλλα οικιακά σας απορρίμματα. Αντίθετα, είναι δική σας ευθύνη να απορρίψετε τον άχρηστο εξοπλισμό σας παραδίδοντάς τον σε καθορισμένο σημείο συλλογής για την ανακύκλωση άχρηστου ηλεκτρικού και ηλεκτρονικού εξοπλισμού. Η ξεχωριστή συλλογή και ανακύκλωση του άχρηστου εξοπλισμού σας κατά την απόρριψη θα συμβάλει στη διατήρηση των φυσικών πόρων και θα διασφαλίσει ότι η ανακύκλωση γίνεται με τρόπο που προστατεύει την ανθρώπινη υγεία και το περιβάλλον. Για περισσότερες πληροφορίες σχετικά με το πού μπορείτε να παραδώσετε τον άχρηστο εξοπλισμό σας για ανακύκλωση, επικοινωνήστε με το αρμόδιο τοπικό γραφείο, την τοπική υπηρεσία διάθεσης οικιακών απορριμμάτων ή το κατάστημα όπου αγοράσατε το προϊόν.



Készülékek magánháztartásban történő selejtezése az Európai Unió területén

A készüléken, illetve a készülék csomagolásán látható azonos szimbólum annak jelzésére szolgál, hogy a készülék a selejtezés során az egyéb háztartási hulladéktól eltérő módon kezelendő. A vásárló a hulladékká vált készüléket köteles a kijelölt gyűjtőhelyre szállítani az elektromos és elektronikai készülékek újrahasznosítása céljából. A hulladékká vált készülékek selejtezéskori begyűjtése és újrahasznosítása hozzájárul a természeti erőforrások megőrzéséhez, valamint biztosítja a selejtezett termékek környezetre és emberi egészségre nézve biztonságos feldolgozását. A begyűjtés pontos helyéről bővebb tájékoztatást a lakhelye szerint illetékes önkormányzattól, az illetékes szemételtakarító vállalattól, illetve a terméket elárusító helyen kaphat.



Smaltimento delle apparecchiature da parte di privati nel territorio dell'Unione Europea

Questo simbolo presente sul prodotto o sulla sua confezione indica che il prodotto non può essere smaltito insieme ai rifiuti domestici. È responsabilità dell'utente smaltire le apparecchiature consegnandole presso un punto di raccolta designato al riciclo e allo smaltimento di apparecchiature elettriche ed elettroniche. La raccolta differenziata e il corretto riciclo delle apparecchiature da smaltire permette di proteggere la salute degli individui e l'ecosistema. Per ulteriori informazioni relative ai punti di raccolta delle apparecchiature, contattare l'ente locale per lo smaltimento dei rifiuti, oppure il negozio presso il quale è stato acquistato il prodotto.



Nolietotu iekārtu iznīcināšanas noteikumi lietotājiem Eiropas Savienības privātajās mājsaimniecībās

Šāds simbols uz izstrādājuma vai uz tā iesaiņojuma norāda, ka šo izstrādājumu nedrīkst izmest kopā ar citiem sadzīves atkritumiem. Jūs atbildat par to, lai nolietotās iekārtas tiktu nodotas speciāli iekārtotos punktos, kas paredzēti izmantoto elektrisko un elektronisko iekārtu savākšanai otrreizējai pārstrādei. Atsevišķa nolietoto iekārtu savākšana un otrreizējā pārstrāde palīdzēs saglabāt dabas resursus un garantēs, ka šīs iekārtas tiks otrreizēji pārstrādātas tādā veidā, lai pasargātu vidi un cilvēku veselību. Lai uzzinātu, kur nolietotās iekārtas var izmest otrreizējai pārstrādei, jāvēršas savas dzīves vietas pašvaldībā, sadzīves atkritumu savākšanas dienestā vai veikalā, kurā izstrādājums tika nopirkts.



Vartotojų iš privačių namų ūkių įrangos atliekų šalinimas Europos Sąjungoje

Šis simbolis ant gaminio arba jo pakuotės rodo, kad šio gaminio šalinti kartu su kitomis namų ūkio atliekomis negalima. Šalintinas įrangos atliekas privalote pristatyti į specialią surinkimo vietą elektros ir elektroninės įrangos atliekoms perdirbti. Atskirai surenkamos ir perdirbamos šalintinos įrangos atliekos padės saugoti gamtinius išteklius ir užtikrinti, kad jos bus perdirbtos tokiu būdu, kuris nekenkia žmonių sveikatai ir aplinkai. Jeigu norite sužinoti daugiau apie tai, kur galima pristatyti perdirbtinas įrangos atliekas, kreipkitės į savo seniūniją, namų ūkio atliekų šalinimo tarnybą arba parduotuvę, kurioje įsigijote gaminį.



Verwijdering van afgedankte apparatuur door privé-gebruikers in de Europese Unie

Dit symbool op het product of de verpakking geeft aan dat dit product niet mag worden gedeponeerd bij het normale huishoudelijke afval. U bent zelf verantwoordelijk voor het inleveren van uw afgedankte apparatuur bij een inzamelingspunt voor het recyclen van oude elektrische en elektronische apparatuur. Door uw oude apparatuur apart aan te bieden en te recyclen, kunnen natuurlijke bronnen worden behouden en kan het materiaal worden hergebruikt op een manier waarmee de volksgezondheid en het milieu worden beschermd. Neem contact op met uw gemeente, het afvalinzamelingsbedrijf of de winkel waar u het product hebt gekocht voor meer informatie over inzamelingspunten waar u oude apparatuur kunt aanbieden voor recycling.



Pozbywanie się zużytego sprzętu przez użytkowników w prywatnych gospodarstwach domowych w Unii Europejskiej

Ten symbol na produkcie lub jego opakowaniu oznacza, że produktu nie wolno wyrzucać do zwykłych pojemników na śmieci. Obowiązkiem użytkownika jest przekazanie zużytego sprzętu do wyznaczonego punktu zbiórki w celu recyklingu odpadów powstałych ze sprzętu elektrycznego i elektronicznego. Osobna zbiórka oraz recykling zużytego sprzętu pomogą w ochronie zasobów naturalnych i zapewnią ponowne wprowadzenie go do obiegu w sposób chroniący zdrowie człowieka i środowisko. Aby uzyskać więcej informacji o tym, gdzie można przekazać zużyty sprzęt do recyklingu, należy się skontaktować z urzędem miasta, zakładem gospodarki odpadami lub sklepem, w którym zakupiono produkt.



Descarte de Lixo Elétrico na Comunidade Européia

Este símbolo encontrado no produto ou na embalagem indica que o produto não deve ser descartado no lixo doméstico comum. É responsabilidade do cliente descartar o material usado (lixo elétrico), encaminhando-o para um ponto de coleta para reciclagem. A coleta e a reciclagem seletivas desse tipo de lixo ajudarão a conservar as reservas naturais; sendo assim, a reciclagem será feita de uma forma segura, protegendo o ambiente e a saúde das pessoas. Para obter mais informações sobre locais que reciclam esse tipo de material, entre em contato com o escritório da HP em sua cidade, com o serviço de coleta de lixo ou com a loja em que o produto foi adquirido.



Likvidácia vyradených zariadení v domácnostiach v Európskej únii

Symbol na výrobku alebo jeho balení označuje, že daný výrobok sa nesmie likvidovať s domovým odpadom. Povinnosťou spotrebiteľa je odovzdať vyradené zariadenie v zbernom mieste, ktoré je určené na recykláciu vyradených elektrických a elektronických zariadení. Separovaný zber a recyklácia vyradených zariadení prispieva k ochrane prírodných zdrojov a zabezpečuje, že recyklácia sa vykonáva spôsobom chrániacim ľudské zdravie a životné prostredie. Informácie o zberných miestach na recykláciu vyradených zariadení vám poskytne miestne zastupiteľstvo, spoločnosť zabezpečujúca odvoz domového odpadu alebo obchod, v ktorom ste si výrobok zakúpili.



Odstranjevanje odslužene opreme uporabnikov v zasebnih gospodinjstvih v Evropski uniji

Ta znak na izdelku ali njegovi embalaži pomeni, da izdelka ne smete odvreči med gospodinjske odpadke. Nasprotno, odsluženo opremo morate predati na zbirališče, pooblaščeno za recikliranje odslužene električne in elektronske opreme. Ločeno zbiranje in recikliranje odslužene opreme prispeva k ohranjanju naravnih virov in zagotavlja recikliranje te opreme na zdravju in okolju neškodljiv način. Za podrobnejše informacije o tem, kam lahko odpeljete odsluženo opremo na recikliranje, se obrnite na pristojni organ, komunalno službo ali trgovino, kjer ste izdelek kupili.



Eliminación de residuos de equipos eléctricos y electrónicos por parte de usuarios particulares en la Unión Europea

Este símbolo en el producto o en su envase indica que no debe eliminarse junto con los desperdicios generales de la casa. Es responsabilidad del usuario eliminar los residuos de este tipo depositándolos en un "punto limpio" para el reciclado de residuos eléctricos y electrónicos. La recogida y el reciclado selectivos de los residuos de aparatos eléctricos en el momento de su eliminación contribuirá a conservar los recursos naturales y a garantizar el reciclado de estos residuos de forma que se proteja el medio ambiente y la salud. Para obtener más información sobre los puntos de recogida de residuos eléctricos y electrónicos para reciclado, póngase en contacto con su ayuntamiento, con el servicio de eliminación de residuos domésticos o con el establecimiento en el que adquirió el producto.



Bortskaffande av avfallsprodukter från användare i privathushåll inom Europeiska Unionen

Om den här symbolen visas på produkten eller förpackningen betyder det att produkten inte får slängas på samma ställe som hushållssopor. I stället är det ditt ansvar att bortskaffa avfallet genom att överlämna det till ett uppsamlingsställe avsett för återvinning av avfall från elektriska och elektroniska produkter. Separat insamling och återvinning av avfallet hjälper till att spara på våra naturresurser och gör att avfallet återvinns på ett sätt som skyddar människors hälsa och miljön. Kontakta ditt lokala kommunkontor, din närmsta återvinningsstation för hushållsavfall eller affären där du köpte produkten för att få mer information om var du kan lämna ditt avfall för återvinning.



Изхвърляне на отпадъчно оборудване от потребители в частни домакинства в Европейския съюз
Този символ върху продукта или опаковката му показва, че продуктът не трябва да се изхвърля заедно с другите битови отпадъци. Вместо това, трябва да предпазите човешкото здраве и околната среда, като предадете отпадъчното оборудване в предназначен за събирането му пункт за рециклиране на неизползваемо електрическо и електронно борудване. За допълнителна информация се свържете с фирмата по чистота, чиито услуги използвате.

Index

Numerics

1000Base-BX … B-4
  fiber-optic cable specifications … B-4
1000Base-LH … B-4
  fiber-optic cable specifications … B-4
1000Base-T
  1000Base-T
    fiber-optic cable specifications … B-3

A

Act LED … 1-12
auto MDI/MDI-X operation … B-10, B-14
  HP Auto-MDIX feature … B-8

B

back of switch
  description … 1-19
  power connector … 1-20
  slot for redundant power supply … 1-20
basic switch configuration
  IP address … 3-3
  manager password … 3-3
  subnet mask … 3-3
  Switch Setup screen … 3-2
blinking LEDs
  error indications … 5-4
Bootp
  automatic switch configuration … 3-2
buttons
  Clear button … 1-16
  LED Mode Select button … 1-14
  Reset button … 1-16

C

cabinet
  mounting the switch in … 2-17
  note on mounting screws … 2-17
cables
  connecting cables to switch ports … 2-22
  effects of non-standard cables … 5-2
  infrastructure requirements … 2-8
cables, twisted pair
  category 3, 4, 5 … B-9
  connector pin-outs … B-8
  crossover cable pin-out … B-12
  HP Auto-MDIX feature … B-8
  MDI-X to MDI connections … B-10, B-14
  MDI-X to MDI-X connections … B-12
  pin-outs … B-10, B-15
  straight-through cable pin-out … B-10, B-15
  switch-to-computer connection … B-10, B-14
  switch-to-switch or hub connection … B-12
  wiring rules … B-8
cabling infrastructure … 2-8
Clear button
  deleting passwords … 1-16
  description … 1-16
  location on switch … 1-16
  restoring factory default configuration … 1-17, 5-14
  to delete password protection … 3-4
configuration
  checking when troubleshooting … 5-3
  DHCP/Bootp … 3-2
  IP address … 3-3
  IP address, manually … 3-3
  manager password … 3-3
  restoring factory defaults … 1-17, 5-14
  subnet mask … 3-3
  Switch Setup screen … 3-2
connecting the switch to a power source … 2-21

console
checking messages during troubleshooting … 5-12
features … 2-23
how to connect in-band … 2-23
how to connect out-of-band … 2-23
Switch Setup screen … 3-2
telnet access … 2-26, 3-5
terminal configuration … 2-23
console port
description … 1-15
crossover cable
pin-out … B-12
use with fixed port configurations … B-8

D

deleting passwords … 1-16
description
back of switches … 1-19
LEDs … 1-10
DHCP
automatic switch configuration … 3-2
diagnostic tests … 5-11
checking the console messages … 5-12
checking the LEDs … 5-4, 5-12
end-to-end connectivity … 5-13
testing the switch only … 5-11
testing twisted-pair cabling … 5-13
downloading new software … 5-15

E

electrical specifications … A-1
EMC regulatory statements … C-9
environmental specifications … A-2
equipment cabinet
mounting the switch in … 2-17
note on mounting screws … 2-17

F

factory default configuration, restoring … 1-17, 5-14
Fan Status LED … 1-10, 1-11
showing error conditions … 5-4
fans
replacing fan trays … 4-4
Fault LED
behavior during self test … 2-16
blinking definition … 1-13
description … 1-10
showing error conditions … 5-4
FDx LED … 1-12
features
console … 2-23
fiber-optic cables
1000Base-BX … B-4
1000Base-LH … B-4
1000Base-T … B-3
flash memory
replacing PCMCIA card … 4-5, 4-6
front of switch
Clear button … 1-16
console port … 1-15
LEDs … 1-10
Mode Select button and indicator LEDs … 1-14
Reset button … 1-16
full-duplex fixed configuration
effects on network connections … 5-3

H

horizontal surface, mounting switch on … 2-20
hot swap
modules … 1-24
transceivers … 1-24
hot swapping … 4-1
redundant power supply … 1-20, 2-13
switch modules … 2-27
HP Auto-MDIX
feature description … B-8

I

in-band
console access, types of … 2-23
managing the switch … 3-1
included parts … 2-1

installation
5400 zl Switches … 2-1
connecting the switch to a power source … 2-21
horizontal surface mounting … 2-20
network cable requirements … 2-8
optional modules … 2-8
precautions … 2-6, 2-7
rack or cabinet mounting … 2-17
redundant power supply … 2-12
site preparation … 2-8
summary of steps … 2-4
IP address
configuring … 3-3
using for switch management … 3-5

L

LED Mode Select
button … 1-14
indicator LEDs … 1-12, 1-14
LEDs
Act … 1-12
behavior during self test … 2-16
blanking definition … 1-13
blinking definition … 1-13
checking during troubleshooting … 5-12
descriptions of … 1-10
error indications … 5-4
Fan Status … 1-10, 1-11
showing error conditions … 5-4
Fault … 1-10
behavior during self test … 2-16
showing error conditions … 5-4
FDx … 1-12
Link … 1-13
Max … 1-12
Mode
description … 1-13
selecting the display … 1-14
mode select indicators … 1-12
Module Status … 1-12
showing error conditions … 5-4
on switch chassis … 1-10
on switch modules … 1-13
Power … 1-10
behavior during error conditions … 5-4
behavior during self test … 2-16
Power Status … 1-11
behavior during self test … 2-16
showing error conditions … 5-4
Self Test … 1-10
behavior during self test … 2-16
showing error conditions … 5-4
Link LEDs … 1-13
link test … 5-13

M

Max LED … 1-12
MDI-X to MDI network cable … B-10, B-14
MDI-X to MDI-X network cable … B-12
Mode LEDs
description … 1-13
selecting the display … 1-14
Module Status LEDs … 1-12
showing error conditions … 5-4
modules, switch
hot swapping … 2-27
installing … 2-8
LEDs … 1-13
list of available types … 1-22
mounting the switch
in a rack or cabinet … 2-17
precautions … 2-6, 2-7
on a horizontal surface … 2-20

N

network cables
HP Auto-MDIX feature … B-8
required types … 2-8
twisted-pair connector pin-outs … B-8
twisted-pair, wiring rules … B-8
network devices
connecting to the switch … 2-22
network ports
connecting to … 2-22
LEDs for … 1-13
non-standard network cables, effects … 5-2

O

out-of-band console access … 2-23, 3-5

P

parts included with the switch … 2-1
passwords
  configuring … 3-3
  deleting … 1-16
  deleting with the Clear button … 3-4
  if you lose the password … 3-4
physical specifications, switch … A-1
Ping test … 5-13
pin-outs, twisted-pair cables … B-8
port configuration
  checking when troubleshooting … 5-3
port LEDs
  Link … 1-13
  Mode … 1-13
ports
  console … 2-23
  HP Auto-MDIX feature … B-8
  network connections … 2-22
power connector … 1-20
Power LED
  behavior during error conditions … 5-4
  behavior during self test … 2-16
  description … 1-10
Power Status LEDs … 1-11
  behavior during self test … 2-16
  showing error conditions … 5-4
power supply
  connecting to a power source … 2-21
  installation cautions … 1-20, 2-13
  making redundant power connections … 2-21
  replacing … 4-2
precautions
  installing power supply … 1-20, 2-13
  mounting the switch in a rack or cabinet … 2-6, 2-7
  power requirements … 2-6, 2-7
preparing the installation site … 2-8
Proactive Network tools
  diagnostics with … 5-10

R

rack
  mounting the switch in … 2-17
rebooting the switch
  to initialize changed module type … 2-9
recycle statements … D-1
redundant power connections … 2-21
redundant power supply
  installation cautions … 1-20, 2-13
  installing … 2-12
  slot for installing … 1-20
regulatory statements … C-9
replacing components
  power supply … 4-2
replacing hardware
  fans … 4-4
  flash memory card … 4-5, 4-6
Reset button
  description … 1-16
  location on switch … 1-16
  restoring factory default configuration … 5-14
resetting the switch
  factory default reset … 5-14
  location of Reset button … 1-16
  troubleshooting procedure … 5-11
routing features … 1-24

S

safety and regulatory statements … C-1
safety specifications … A-3
selecting the Mode LED display … 1-14
self test
  Fault LED behavior … 2-16
  LED behavior during … 2-16
  Power LED behavior … 2-16
  Self Test LED behavior … 2-16
Self Test LED
  behavior during factory default reset … 5-14
  behavior during self test … 2-16
  description … 1-10
  showing error conditions … 5-4
specifications
  electrical … A-1
  environmental … A-2
  physical … A-1
  safety … A-3
straight-through cable
  pin-out … B-10, B-15
  use with fixed port configurations … B-8
subnet mask, configuring … 3-3
summary
  of switch installation … 2-4

switch
connecting to a power source … 2-21
description … 1-1
electrical specifications … A-1
environmental specifications … A-2
included parts … 2-1
mounting in a rack or cabinet … 2-17
mounting on a horizontal surface … 2-20
physical specifications … A-1
switch chassis
LED descriptions … 1-10
switch modules
booting the switch to initialize changed module type … 2-9
hot swapping … 2-27
installing … 2-8
LEDs descriptions … 1-13
list of available types … 1-22
switch operation
verifying after installation … 2-14
Switch Setup screen … 3-2
configuring a subnet mask … 3-3
configuring an IP address … 3-3
field descriptions … 3-3

T

telnet access to the console … 2-26, 3-5
terminal configuration … 2-23
testing
checking the console messages … 5-12
checking the LEDs … 5-12
diagnostic tests … 5-11
end-to-end communications … 5-13
link test … 5-13
Ping test … 5-13
switch operation … 5-11
switch-to-device communications … 5-13
twisted-pair cabling … 5-13
tips for troubleshooting … 5-2
topologies
effects of improper topology … 5-2
Transceivers
indications of unsupported … 5-7
transceivers
hot swap feature … 1-24
troubleshooting … 5-1
basic tips … 5-2
checking port configuration … 5-3
checking the console messages … 5-12
checking the LEDs … 5-12
common network problems … 5-2
connecting to fixed full-duplex devices … 5-3
diagnostic tests … 5-11
effects of improper topology … 5-2
effects of non-standard cables … 5-2
link test … 5-13
Ping test … 5-13
Proactive Network tools … 5-10
restoring factory default configuration … 5-14
testing connections to other devices … 5-13
testing end-to-end communications … 5-13
testing the switch … 5-11
testing the twisted-pair cables … 5-13
twisted-pair cable
crossover cable pin-out … B-12
pin-outs … B-8, B-10, B-15
straight-through cable pin-out … B-10, B-15
switch-to-computer connection … B-10, B-14
switch-to-switch or hub connection … B-12
testing … 5-13
twisted-pair ports
HP Auto-MDIX feature … B-8

W

wiring rules for twisted-pair cables … B-8

Technology for better business outcomes

To learn more, visit www.hp.com/networking/support

© Copyright 2005-2013, 2015 Hewlett-Packard Development Company, L.P. The information contained herein is subject to change without notice. The only warranties for HP products and services are set forth in the express warranty statements accompanying such products and services. Nothing herein should be construed as constituting an additional warranty.
HP will not be liable for technical or editorial errors or omissions contained herein.



May 2015

Manual Part Number

5998-7652