Hewlett Packard Enterprise

HPE ProLiant DL160 Gen9 Server Maintenance and Server Guide

Abstract

This guide describes identification and maintenance procedures, diagnostic tools, specifications and requirements for hardware components and software. This guide is for an experienced service technician. Hewlett Packard Enterprise assumes that you are qualified in the servicing of computer equipment, trained in recognizing hazards in products, and are familiar with weight and stability precautions.

Part Number: 775785-006
Published: May 2017
Edition: 6

© 2014, 2017 Hewlett Packard Enterprise Development LP

Notices

The information contained herein is subject to change without notice. The only warranties for Hewlett Packard Enterprise products and services are set forth in the express warranty statements accompanying such products and services. Nothing herein should be construed as constituting an additional warranty. Hewlett Packard Enterprise shall not be liable for technical or editorial errors or omissions contained herein.

Confidential computer software. Valid license from Hewlett Packard Enterprise required for possession, use, or copying. Consistent with FAR 12.211 and 12.212, Commercial Computer Software, Computer Software Documentation, and Technical Data for Commercial Items are licensed to the U.S. Government under vendor's standard commercial license.

Links to third-party websites take you outside the Hewlett Packard Enterprise website. Hewlett Packard Enterprise has no control over and is not responsible for information outside the Hewlett Packard Enterprise website.

Acknowledgments

Intel®Xeon® is a trademark of Intel Corporation in the U.S. and other countries.

Linux® is the registered trademark of Linus Torvalds in the U.S. and other countries.

Microsoft® and Windows® are either registered trademarks or trademarks of Microsoft Corporation in the United States and/or other countries.

microSD® is a trademark or a registered trademark of SD-3C in the United States, other countries or both.

Contents

Customer self repair 6

Illustrated parts catalog 15

Mechanical components 15
System components 17

Removal and replacement procedures 24

Required tools 24
Safety considerations 24
Preventing electrostatic discharge 24
Symbols on equipment 24
Server warnings and cautions 25
Rack warnings 26
Preparation procedures 26
Remove the security bezel (optional) 27
Power down the server 27
Extend the server from the rack 28
Accessing the product rear panel 30
Opening the cable management arm 30
Remove the server from the rack 31
Remove the PCI riser cage 31
Non-hot-plug drive carrier 33
Non-hot-plug drive 33
Hot-plug drive blanks 34
Hot-plug drive 35
Access panel 36
Four-bay LFF non-hot-plug drive backplane 36
Four-bay LFF hot-plug drive backplane 37
Eight-bay SFF hot-plug drive backplane 38
Smart Storage Battery 39
Smart Storage Battery holder 40
FBWC module 41
M.2 SSD enablement kit 42
M.2 SSD enablement board 42
M.2 SSD module 44
Optical drive 45
Fan and fan blank 47
Fan population guidelines 47
Fan blank 48
Hot-swap fan 49
DIMMs 50
Memory-processor information 50
Removing a DIMM 50
Heatsink 51
Removing the heatsink 51
Remove the heatsink 52
Installing the heatsink 52
Install the heatsink 53

Processor....54
Removing a processor....54
Installing a processor....56
Expansion board....58
Primary PCIe riser board....60
Secondary PCIe riser assembly....61
FlexibleLOM riser board....62
System battery....64
Dedicated iLO management module....66
Enabling the dedicated iLO management module....67
Front I/O modules for LFF and SFF drive models....68
System board....69
Removing the system board....69
Remove the system board....71
Installing the system board....72
Install the system board....75
HPE 550 W Power Supply (non-hot-plug)....76
DIMM guard....78
Redundant power supply components....79
Power input module and RPS backplane characteristics....79
Hot-plug power input module....80
Redundant power supply backplane....80
HP Trusted Platform Module....82

Troubleshooting....83
Troubleshooting resources....83

Diagnostic tools....84
Product QuickSpecs....84
HPE iLO....84
Active Health System....84
HPE ProLiant Pre-boot Health Summary....85
Integrated Management Log....85
UEFI System Utilities....85
Using UEFI System Utilities....85
Embedded Diagnostics option....86
Re-entering the server serial number and product ID....86
Insight Diagnostics....87
Insight Diagnostics survey functionality....87
USB support....87
External USB functionality....88
HPE Smart Storage Administrator....88
Automatic Server Recovery....88

Component identification....89
Front panel components....89
Front panel LEDs and buttons....90
Front panel power fault LEDs....92
Rear panel components....93
Rear panel LEDs....93
PCIe riser board slot definitions....94
System board components....95
DIMM slot locations....96

System maintenance switch....97
Disabling the Dynamic Smart Array B140i Controller....97
NMI functionality....98
Drive numbering....98
Hot-plug drive LED definitions....99
Fan locations....100

Cabling....101
Cabling overview....101
Storage cabling....101
Four-bay LFF non-hot-plug drive cabling....101
Four-bay LFF hot-plug drive cabling....101
Eight-bay SFF hot-plug drive cabling....103
M.2 SSD cabling....104
FBWC cabling....106
Smart Storage Battery cabling....108
FlexibleLOM cabling....108
Power supply cabling....108
Optical drive cabling....110
Front I/O cabling....111
Front USB 3.0 cabling....112

Specifications....113
Environmental specifications....113
Mechanical specifications....113
Power supply specifications....113
Hot-plug power supply calculations....114

Support and other resources....115
Accessing Hewlett Packard Enterprise Support....115
Accessing updates....115
Customer self repair....116
Remote support....116
Warranty information....116
Regulatory information....117
Documentation feedback....117

Acronyms and abbreviations....118

Customer self repair

Hewlett Packard Enterprise products are designed with many Customer Self Repair (CSR) parts to minimize repair time and allow for greater flexibility in performing defective parts replacement. If during the diagnosis period Hewlett Packard Enterprise (or Hewlett Packard Enterprise service providers or service partners) identifies that the repair can be accomplished by the use of a CSR part, Hewlett Packard Enterprise will ship that part directly to you for replacement. There are two categories of CSR parts:

- **Mandatory**—Parts for which customer self repair is mandatory. If you request Hewlett Packard Enterprise to replace these parts, you will be charged for the travel and labor costs of this service.
- **Optional**—Parts for which customer self repair is optional. These parts are also designed for customer self repair. If, however, you require that Hewlett Packard Enterprise replace them for you, there may or may not be additional charges, depending on the type of warranty service designated for your product.

NOTE: Some Hewlett Packard Enterprise parts are not designed for customer self repair. In order to satisfy the customer warranty, Hewlett Packard Enterprise requires that an authorized service provider replace the part. These parts are identified as "No" in the Illustrated Parts Catalog.

Based on availability and where geography permits, CSR parts will be shipped for next business day delivery. Same day or four-hour delivery may be offered at an additional charge where geography permits. If assistance is required, you can call the Hewlett Packard Enterprise Support Center and a technician will help you over the telephone. Hewlett Packard Enterprise specifies in the materials shipped with a replacement CSR part whether a defective part must be returned to Hewlett Packard Enterprise. In cases where it is required to return the defective part to Hewlett Packard Enterprise, you must ship the defective part back to Hewlett Packard Enterprise within a defined period of time, normally five (5) business days. The defective part must be returned with the associated documentation in the provided shipping material. Failure to return the defective part may result in Hewlett Packard Enterprise billing you for the replacement. With a customer self repair, Hewlett Packard Enterprise will pay all shipping and part return costs and determine the courier/carrier to be used.

For more information about the Hewlett Packard Enterprise CSR program, contact your local service provider. For the North American program, go to the **Hewlett Packard Enterprise CSR website**

Parts only warranty service

Your Hewlett Packard Enterprise Limited Warranty may include a parts only warranty service. Under the terms of parts only warranty service, Hewlett Packard Enterprise will provide replacement parts free of charge.

For parts only warranty service, CSR part replacement is mandatory. If you request Hewlett Packard Enterprise to replace these parts, you will be charged for the travel and labor costs of this service.

Réparation par le client (CSR)

Les produits Hewlett Packard Enterprise comportent de nombreuses pièces CSR (Customer Self Repair = réparation par le client) afin de minimiser les délais de réparation et faciliter le remplacement des pièces défectueuses. Si pendant la période de diagnostic, Hewlett Packard Enterprise (ou ses partenaires ou mainteneurs agréés) détermine que la réparation peut être effectuée à l'aide d'une pièce CSR, Hewlett Packard Enterprise vous l'envoie directement. Il existe deux catégories de pièces CSR :

- **Obligatoire—**Pièces pour lesquelles la réparation par le client est obligatoire. Si vous demandez à Hewlett Packard Enterprise de remplacer ces pièces, les coûts de déplacement et main d'œuvre du service vous seront facturés.
- **Facultatif—**Pièces pour lesquelles la réparation par le client est facultative. Ces pièces sont également conçues pour permettre au client d'effectuer lui-même la réparation. Toutefois, si vous

demandez à Hewlett Packard Enterprise de remplacer ces pièces, l'intervention peut ou non vous être facturée, selon le type de garantie applicable à votre produit.

REMARQUE: Certaines pièces Hewlett Packard Enterprise ne sont pas conçues pour permettre au client d'effectuer lui-même la réparation. Pour que la garantie puisse s'appliquer, Hewlett Packard Enterprise exige que le remplacement de la pièce soit effectué par un Mainteneur Agréé. Ces pièces sont identifiées par la mention "Non" dans le Catalogue illustré.

Les pièces CSR sont livrées le jour ouvré suivant, dans la limite des stocks disponibles et selon votre situation géographique. Si votre situation géographique le permet et que vous demandez une livraison le jour même ou dans les 4 heures, celle-ci vous sera facturée. Pour toute assistance, appelez le Centre d'assistance Hewlett Packard Enterprise pour qu'un technicien vous aide au téléphone Dans les documents envoyés avec la pièce de rechange CSR, Hewlett Packard Enterprise précise s'il est nécessaire de lui retourner la pièce défectueuse. Si c'est le cas, vous devez le faire dans le délai indiqué, généralement cinq (5) jours ouvrés. La pièce et sa documentation doivent être retournées dans l'emballage fourni. Si vous ne retournez pas la pièce défectueuse, Hewlett Packard Enterprise se réserve le droit de vous facturer les coûts de remplacement. Dans le cas d'une pièce CSR, Hewlett Packard Enterprise supporte l'ensemble des frais d'expédition et de retour, et détermine la société de courses ou le transporteur à utiliser.

Pour plus d'informations sur le programme CSR de Hewlett Packard Enterprise, contactez votre Mainteneur Agrée local. Pour plus d'informations sur ce programme en Amérique du Nord, consultez le site **Web Hewlett Packard Enterprise**.

Service de garantie "pièces seules"

Votre garantie limitée Hewlett Packard Enterprise peut inclure un service de garantie "pièces seules". Dans ce cas, les pièces de rechange fournies par Hewlett Packard Enterprise ne sont pas facturées.

Dans le cadre de ce service, la réparation des pièces CSR par le client est obligatoire. Si vous demandez à Hewlett Packard Enterprise de remplacer ces pièces, les coûts de déplacement et main d'œuvre du service vous seront facturés.

Riparazione da parte del cliente

Per abbreviare i tempi di riparazione e garantire una maggiore flessibilità nella sostituzione di parti difettose, i prodotti Hewlett Packard Enterprise sono realizzati con numerosi componenti che possono essere riparati direttamente dal cliente (CSR, Customer Self Repair). Se in fase di diagnostica Hewlett Packard Enterprise (o un centro di servizi o di assistenza Hewlett Packard Enterprise) identifica il guasto come riparabile mediante un ricambio CSR, Hewlett Packard Enterprise lo spedirà direttamente al cliente per la sostituzione. Vi sono due categorie di parti CSR:

- **Obbligatorie—**Parti che devono essere necessariamente riparate dal cliente. Se il cliente ne affida la riparazione ad Hewlett Packard Enterprise, deve sostenere le spese di spedizione e di manodopera per il servizio.
- **Opzionali—**Parti la cui riparazione da parte del cliente è facoltativa. Si tratta comunque di componenti progettati per questo scopo. Se tuttavia il cliente ne richiede la sostituzione ad Hewlett Packard Enterprise, potrebbe dover sostenere spese addizionali a seconda del tipo di garanzia previsto per il prodotto.

NOTA: alcuni componenti Hewlett Packard Enterprise non sono progettati per la riparazione da parte del cliente. Per rispettare la garanzia, Hewlett Packard Enterprise richiede che queste parti siano sostituite da un centro di assistenza autorizzato. Tali parti sono identificate da un "No" nel Catalogo illustrato dei componenti.

In base alla disponibilità e alla località geografica, le parti CSR vengono spedite con consegna entro il giorno lavorativo seguente. La consegna nel giorno stesso o entro quattro ore è offerta con un supplemento di costo solo in alcune zone. In caso di necessità si può richiedere l'assistenza telefonica di un addetto del centro di supporto tecnico Hewlett Packard Enterprise. Nel materiale fornito con una parte di ricambio CSR, Hewlett Packard Enterprise specifica se il cliente deve restituire dei component. Qualora sia richiesta la resa ad Hewlett Packard Enterprise del componente difettoso, lo si deve spedire ad

Hewlett Packard Enterprise entro un determinato periodo di tempo, generalmente cinque (5) giorni lavorativi. Il componente difettoso deve essere restituito con la documentazione associata nell'imballo di spedizione fornito. La mancata restituzione del componente può comportare la fatturazione del ricambio da parte di Hewlett Packard Enterprise. Nel caso di riparazione da parte del cliente, Hewlett Packard Enterprise sostiene tutte le spese di spedizione e resa e sceglie il corriere/vettore da utilizzare.

Per ulteriori informazioni sul programma CSR di Hewlett Packard Enterprise, contattare il centro di assistenza di zona. Per il programma in Nord America fare riferimento **al sito Web**.

Servizio di garanzia per i soli componenti

La garanzia limitata Hewlett Packard Enterprise può includere un servizio di garanzia per i soli componenti. Nei termini di garanzia del servizio per i soli componenti, Hewlett Packard Enterprise fornirà gratuitamente le parti di ricambio.

Per il servizio di garanzia per i soli componenti è obbligatoria la formula CSR che prevede la riparazione da parte del cliente. Se il cliente invece richiede la sostituzione ad Hewlett Packard Enterprise dovrà sostenere le spese di spedizione e di manodopera per il servizio.

Customer Self Repair

Hewlett Packard Enterprise Produkte enthalten viele CSR-Teile (Customer Self Repair), um Reparaturzeiten zu minimieren und höhere Flexibilität beim Austausch defekter Bauteile zu ermöglichen. Wenn Hewlett Packard Enterprise (oder ein Hewlett Packard Enterprise Servicepartner) bei der Diagnose feststellt, dass das Produkt mithilfe eines CSR-Teils repariert werden kann, sendet Ihnen Hewlett Packard Enterprise dieses Bauteil zum Austausch direkt zu. CSR-Teile werden in zwei Kategorien unterteilt:

- **Zwingend**—Teile, für die das Customer Self Repair-Verfahren zwingend vorgegeben ist. Wenn Sie den Austausch dieser Teile von Hewlett Packard Enterprise vornehmen lassen, werden Ihnen die Anfahrt- und Arbeitskosten für diesen Service berechnet.
- **Optional**—Teile, für die das Customer Self Repair-Verfahren optional ist. Diese Teile sind auch für Customer Self Repair ausgelegt. Wenn Sie jedoch den Austausch dieser Teile von Hewlett Packard Enterprise vornehmen lassen möchten, können bei diesem Service je nach den für Ihr Produkt vorgesehenen Garantiebedingungen zusätzliche Kosten anfallen.

HINWEIS: Einige Hewlett Packard Enterprise Teile sind nicht für Customer Self Repair ausgelegt. Um den Garantieanspruch des Kunden zu erfüllen, muss das Teil von einem Hewlett Packard Enterprise Servicepartner ersetzt werden. Im illustrierten Teilekatalog sind diese Teile mit „No“ bzw. „Nein“ gekennzeichnet.

CSR-Teile werden abhängig von der Verfügbarkeit und vom Lieferziel am folgenden Geschäftstag geliefert. Für bestimmte Standorte ist eine Lieferung am selben Tag oder innerhalb von vier Stunden gegen einen Aufpreis verfügbar. Wenn Sie Hilfe benötigen, können Sie das Hewlett Packard Enterprise Support Center anrufen und sich von einem Mitarbeiter per Telefon helfen lassen. Den Materialien von Hewlett Packard Enterprise, die mit einem CSR-Ersatzteil geliefert werden, können Sie entnehmen, ob das defekte Teil an Hewlett Packard Enterprise zurückgeschickt werden muss. Wenn es erforderlich ist, das defekte Teil an Hewlett Packard Enterprise zurückzuschicken, müssen Sie dies innerhalb eines vorgegebenen Zeitraums tun, in der Regel innerhalb von fünf (5) Geschäftstagen. Das defekte Teil muss mit der zugehörigen Dokumentation in der Verpackung zurückgeschickt werden, die im Lieferumfang enthalten ist. Wenn Sie das defekte Teil nicht zurückschicken, kann Hewlett Packard Enterprise Ihnen das Ersatzteil in Rechnung stellen. Im Falle von Customer Self Repair kommt Hewlett Packard Enterprise für alle Kosten für die Lieferung und Rücksendung auf und bestimmt den Kurier-/Frachtdienst.

Weitere Informationen über das Hewlett Packard Enterprise Customer Self Repair Programm erhalten Sie von Ihrem Servicepartner vor Ort. Informationen über das CSR-Programm in Nordamerika finden Sie auf der **Hewlett Packard Enterprise Website unter**.

Parts-only Warranty Service (Garantieservice ausschließlich für Teile)

Ihre Hewlett Packard Enterprise Garantie umfasst möglicherweise einen Parts-only Warranty Service (Garantieservice ausschließlich für Teile). Gemäß den Bestimmungen des Parts-only Warranty Service stellt Hewlett Packard Enterprise Ersatzteile kostenlos zur Verfügung.

Für den Parts-only Warranty Service ist das CSR-Verfahren zwingend vorgegeben. Wenn Sie den Austausch dieser Teile von Hewlett Packard Enterprise vornehmen lassen, werden Ihnen die Anfahrt- und Arbeitskosten für diesen Service berechnet.

Reparaciones del propio cliente

Los productos de Hewlett Packard Enterprise incluyen muchos componentes que el propio usuario puede reemplazar (Customer Self Repair, CSR) para minimizar el tiempo de reparación y ofrecer una mayor flexibilidad a la hora de realizar sustituciones de componentes defectuosos. Si, durante la fase de diagnóstico, Hewlett Packard Enterprise (o los proveedores o socios de servicio de Hewlett Packard Enterprise) identifica que una reparación puede llevarse a cabo mediante el uso de un componente CSR, Hewlett Packard Enterprise le enviará dicho componente directamente para que realice su sustitución. Los componentes CSR se clasifican en dos categorías:

- **Obligatorio**—Componentes cuya reparación por parte del usuario es obligatoria. Si solicita a Hewlett Packard Enterprise que realice la sustitución de estos componentes, tendrá que hacerse cargo de los gastos de desplazamiento y de mano de obra de dicho servicio.
- **Opcional**—Componentes cuya reparación por parte del usuario es opcional. Estos componentes también están diseñados para que puedan ser reparados por el usuario. Sin embargo, si precisa que Hewlett Packard Enterprise realice su sustitución, puede o no conllevar costes adicionales, dependiendo del tipo de servicio de garantía correspondiente al producto.

NOTA: Algunos componentes de Hewlett Packard Enterprise no están diseñados para que puedan ser reparados por el usuario. Para que el usuario haga valer su garantía, Hewlett Packard Enterprise pone como condición que un proveedor de servicios autorizado realice la sustitución de estos componentes. Dichos componentes se identifican con la palabra "No" en el catálogo ilustrado de componentes.

Según la disponibilidad y la situación geográfica, los componentes CSR se enviarán para que lleguen a su destino al siguiente día laborable. Si la situación geográfica lo permite, se puede solicitar la entrega en el mismo día o en cuatro horas con un coste adicional. Si precisa asistencia técnica, puede llamar al Centro de asistencia técnica de Hewlett Packard Enterprise y recibirá ayuda telefónica por parte de un técnico. Con el envío de materiales para la sustitución de componentes CSR, Hewlett Packard Enterprise especificará si los componentes defectuosos deberán devolverse a Hewlett Packard Enterprise. En aquellos casos en los que sea necesario devolver algún componente a Hewlett Packard Enterprise, deberá hacerlo en el periodo de tiempo especificado, normalmente cinco días laborables. Los componentes defectuosos deberán devolverse con toda la documentación relacionada y con el embalaje de envío. Si no enviara el componente defectuoso requerido, Hewlett Packard Enterprise podrá cobrarle por el de sustitución. En el caso de todas sustituciones que lleve a cabo el cliente, Hewlett Packard Enterprise se hará cargo de todos los gastos de envío y devolución de componentes y escogerá la empresa de transporte que se utilice para dicho servicio.

Para obtener más información acerca del programa de Reparaciones del propio cliente de Hewlett Packard Enterprise, póngase en contacto con su proveedor de servicios local. Si está interesado en el programa para Norteamérica, visite **la página web de Hewlett Packard Enterprise CSR**.

Servicio de garantía exclusivo de componentes

La garantía limitada de Hewlett Packard Enterprise puede que incluya un servicio de garantía exclusivo de componentes. Según las condiciones de este servicio exclusivo de componentes, Hewlett Packard Enterprise le facilitará los componentes de repuesto sin cargo adicional alguno.

Para este servicio de garantía exclusivo de componentes, es obligatoria la sustitución de componentes por parte del usuario (CSR). Si solicita a Hewlett Packard Enterprise que realice la sustitución de estos componentes, tendrá que hacerse cargo de los gastos de desplazamiento y de mano de obra de dicho servicio.

Customer Self Repair

Veel onderdelen in Hewlett Packard Enterprise producten zijn door de klant zelf te repareren, waardoor de reparatieduur tot een minimum beperkt kan blijven en de flexibiliteit in het vervangen van defecte onderdelen groter is. Deze onderdelen worden CSR-onderdelen (Customer Self Repair) genoemd. Als Hewlett Packard Enterprise (of een Hewlett Packard Enterprise Service Partner) bij de diagnose vaststelt dat de reparatie kan worden uitgevoerd met een CSR-onderdeel, verzendt Hewlett Packard Enterprise dat onderdeel rechtstreeks naar u, zodat u het defecte onderdeel daarmee kunt vervangen. Er zijn twee categorieën CSR-onderdelen:

- **Verplicht**—Onderdelen waarvoor reparatie door de klant verplicht is. Als u Hewlett Packard Enterprise verzoekt deze onderdelen voor u te vervangen, worden u voor deze service reiskosten en arbeidsloon in rekening gebracht.
- **Optioneel**—Onderdelen waarvoor reparatie door de klant optioneel is. Ook deze onderdelen zijn ontworpen voor reparatie door de klant. Als u echter Hewlett Packard Enterprise verzoekt deze onderdelen voor u te vervangen, kunnen daarvoor extra kosten in rekening worden gebracht, afhankelijk van het type garantieservice voor het product.

OPMERKING: Sommige Hewlett Packard Enterprise onderdelen zijn niet ontwikkeld voor reparatie door de klant. In verband met de garantievoorwaarden moet het onderdeel door een geautoriseerde Service Partner worden vervangen. Deze onderdelen worden in de geïllustreerde onderdelencatalogus aangemerkt met "Nee".

Afhankelijk van de leverbaarheid en de locatie worden CSR-onderdelen verzonden voor levering op de eerstvolgende werkdag. Levering op dezelfde dag of binnen vier uur kan tegen meerkosten worden aangeboden, indien dit mogelijk is gezien de locatie. Indien assistentie is gewenst, belt u het Hewlett Packard Enterprise Support Center om via de telefoon ondersteuning van een technicus te ontvangen. Hewlett Packard Enterprise vermeldt in de documentatie bij het vervangende CSR-onderdeel of het defecte onderdeel aan Hewlett Packard Enterprise moet worden geretourneerd. Als het defecte onderdeel aan Hewlett Packard Enterprise moet worden teruggezonden, moet u het defecte onderdeel binnen een bepaalde periode, gewoonlijk vijf (5) werkdagen, retourneren aan Hewlett Packard Enterprise. Het defecte onderdeel moet met de bijbehorende documentatie worden geretourneerd in het meegeleverde verpakkingsmateriaal. Als u het defecte onderdeel niet terugzendt, kan Hewlett Packard Enterprise u voor het vervangende onderdeel kosten in rekening brengen. Bij reparatie door de klant betaalt Hewlett Packard Enterprise alle verzendkosten voor het vervangende en geretourneerde onderdeel en kiest Hewlett Packard Enterprise zelf welke koerier/transportonderneming hiervoor wordt gebruikt.

Neem contact op met een Service Partner voor meer informatie over het Customer Self Repair programma van Hewlett Packard Enterprise. Informatie over Service Partners vindt u op de **Hewlett Packard Enterprise website**.

Garantieservice "Parts Only"

Het is mogelijk dat de Hewlett Packard Enterprise garantie alleen de garantieservice "Parts Only" omvat. Volgens de bepalingen van de Parts Only garantieservice zal Hewlett Packard Enterprise kosteloos vervangende onderdelen ter beschikking stellen.

Voor de Parts Only garantieservice is vervanging door CSR-onderdelen verplicht. Als u Hewlett Packard Enterprise verzoekt deze onderdelen voor u te vervangen, worden u voor deze service reiskosten en arbeidsloon in rekening gebracht

Reparo feito pelo cliente

Os produtos da Hewlett Packard Enterprise são projetados com muitas peças para reparo feito pelo cliente (CSR) de modo a minimizar o tempo de reparo e permitir maior flexibilidade na substituição de peças com defeito. Se, durante o período de diagnóstico, a Hewlett Packard Enterprise (ou fornecedores/parceiros da Hewlett Packard Enterprise) concluir que o reparo pode ser efetuado pelo uso de uma peça CSR, a Hewlett Packard Enterprise enviará a peça diretamente ao cliente. Há duas categorias de peças CSR:

- **Obrigatória**—Peças cujo reparo feito pelo cliente é obrigatório. Se desejar que a Hewlett Packard Enterprise substitua essas peças, serão cobradas as despesas de transporte e mão-de-obra do serviço.
- **Opcional**—Peças cujo reparo feito pelo cliente é opcional. Essas peças também são projetadas para o reparo feito pelo cliente. No entanto, se desejar que a Hewlett Packard Enterprise as substitua, pode haver ou não a cobrança de taxa adicional, dependendo do tipo de serviço de garantia destinado ao produto.

OBSERVAÇÃO: Algumas peças da Hewlett Packard Enterprise não são projetadas para o reparo feito pelo cliente. A fim de cumprir a garantia do cliente, a Hewlett Packard Enterprise exige que um técnico autorizado substitua a peça. Essas peças estão identificadas com a marca "No" (Não), no catálogo de peças ilustrado.

Conforme a disponibilidade e o local geográfico, as peças CSR serão enviadas no primeiro dia útil após o pedido. Onde as condições geográficas permitirem, a entrega no mesmo dia ou em quatro horas pode ser feita mediante uma taxa adicional. Se precisar de auxílio, entre em contato com o Centro de suporte técnico da Hewlett Packard Enterprise para que um técnico o ajude por telefone. A Hewlett Packard Enterprise especifica nos materiais fornecidos com a peça CSR de reposição se a peça com defeito deve ser devolvida à Hewlett Packard Enterprise. Nos casos em que isso for necessário, é preciso enviar a peça com defeito à Hewlett Packard Enterprise, você deverá enviar a peça com defeito de volta para a Hewlett Packard Enterprise dentro do período de tempo definido, normalmente em 5 (cinco) dias úteis. A peça com defeito deve ser enviada com a documentação correspondente no material de transporte fornecido. Caso não o faça, a Hewlett Packard Enterprise poderá cobrar a reposição. Para as peças de reparo feito pelo cliente, a Hewlett Packard Enterprise paga todas as despesas de transporte e de devolução da peça e determina a transportadora/serviço postal a ser utilizado.

Para obter mais informações sobre o programa de reparo feito pelo cliente da Hewlett Packard Enterprise, entre em contato com o fornecedor de serviços local. Para o programa norte-americano, **visite o site da Hewlett Packard Enterprise**.

Serviço de garantia apenas para peças

A garantia limitada da Hewlett Packard Enterprise pode incluir um serviço de garantia apenas para peças. Segundo os termos do serviço de garantia apenas para peças, a Hewlett Packard Enterprise fornece as peças de reposição sem cobrar nenhuma taxa.

No caso desse serviço, a substituição de peças CSR é obrigatória. Se desejar que a Hewlett Packard Enterprise substitua essas peças, serão cobradas as despesas de transporte e mão-de-obra do serviço.

カスタマーセルフリペア

修理時間を短縮し、故障部品の交換における高い柔軟性を確保するために、Hewlett Packard Enterprise製品には多数のカスタマーセルフリペア（CSR）部品があります。診断の際に、CSR部品を使用すれば修理ができるとHewlett Packard Enterprise（Hewlett Packard EnterpriseまたはHewlett Packard Enterprise正規保守代理店）が判断した場合、Hewlett Packard Enterpriseはその部品を直接、お客様に発送し、お客様に交換していただきます。CSR部品には以下の2種類があります。

- **必須** - カスタマーセルフリペアが必須の部品。当該部品について、もしもお客様がHewlett Packard Enterpriseに交換作業を依頼される場合には、その修理サービスに関する交通費および人件費がお客様に請求されます。
- **任意** - カスタマーセルフリペアが任意である部品。この部品もカスタマーセルフリペア用です。当該部品について、もしもお客様がHewlett Packard Enterpriseに交換作業を依頼される場合には、お買い上げの製品に適用される保証サービス内容の範囲内においては、別途費用を負担していただくことなく保証サービスを受けることができます。

注：Hewlett Packard Enterprise製品の一部の部品は、カスタマーセルフリペアの対象外です。製品の保証を継続するためには、Hewlett Packard EnterpriseまたはHewlett Packard Enterprise正規保守代理店による交換作業が必須となります。部品カタログには、当該部品がカスタマーセルフリペア除外品である旨が記載されています。

部品供給が可能な場合、地域によっては、CSR部品を翌営業日に届くように発送します。また、地域によっては、追加費用を負担いただくことにより同日または4時間以内に届くように発送することも可能な場合があります。サポートが必要なときは、Hewlett Packard Enterpriseサポートセンターに電話していただければ、技術者が電話でアドバイスします。交換用のCSR部品または同梱物には、故障部品をHewlett Packard Enterpriseに返送する必要があるかどうかが表示されています。故障部品をHewlett Packard Enterpriseに返送する必要がある場合は、指定期限内（通常は5営業日以内）に故障部品をHewlett Packard Enterpriseに返送してください。故障部品を返送する場合は、届いた時の梱包箱に関連書類とともに入れてください。故障部品を返送しない場合、Hewlett Packard Enterpriseから部品費用が請求されます。カスタマーセルフリペアの際には、Hewlett Packard Enterpriseは送料および部品返送費を全額負担し、使用する宅配便会社や運送会社を指定します。

部品のみ保証サービス

Hewlett Packard Enterprise保証サービスには、部品のみ保証サービスが適用される場合があります。このサービスでは、交換部品は無償で提供されます。

部品のみ保証サービスにおいては、CSR部品をお客様により交換作業していただくことが必須になります。当該部品について、もしもお客様がHewlett Packard Enterpriseに交換作業を依頼される場合には、その修理サービスに関する交通費および人件費がお客様のご負担となります。

客户自行维修

Hewlett Packard Enterprise 产品提供许多客户自行维修 (CSR) 部件，以尽可能缩短维修时间和在更换缺陷部件方面提供更大的灵活性。如果在诊断期间 Hewlett Packard Enterprise（或Hewlett Packard Enterprise 服务提供商或服务合作伙伴）确定可以通过使用 CSR 部件完成维修，Hewlett Packard Enterprise 将直接把该部件发送给您进行更换。有两类 CSR 部件：

- **强制性的** — 要求客户必须自行维修的部件。如果您请求 Hewlett Packard Enterprise 更换这些部件，则必须为该服务支付差旅费和人工费用。
- **可选的** — 客户可以选择是否自行维修的部件。这些部件也是为客户自行维修设计的。不过，如果您要求 Hewlett Packard Enterprise 为您更换这些部件，则根据为您的产品指定的保修服务类型，Hewlett Packard Enterprise 可能收取或不再收取任何附加费用。

注：某些 Hewlett Packard Enterprise 部件的设计并未考虑客户自行维修。为了满足客户保修的需要，Hewlett Packard Enterprise 要求授权服务提供商更换相关部件。这些部件在部件图解目录中标记为“否”。

CSR 部件将在下一个工作日发运（取决于备货情况和允许的地理范围）。在允许的地理范围内，可在当天或四小时内发运，但要收取额外费用。如果需要帮助，您可以致电 Hewlett Packard Enterprise 技术支持中心，将会有技术人员通过电话为您提供帮助。Hewlett Packard Enterprise 会在随更换的 CSR 部件发运的材料中指明是否必须将有缺陷的部件返还给 Hewlett Packard Enterprise。如果要求您将有缺陷的部件返还给 Hewlett Packard Enterprise，那么您必须在规定的期限内（通常是五 (5) 个工作日）将缺陷部件发给 Hewlett Packard Enterprise。有缺陷的部件必须随所提供的发运材料中的相关文件一起返还。如果未能送还有缺陷的部件，Hewlett Packard Enterprise 可能会要求您支付更换费用。客户自行维修时，Hewlett Packard Enterprise 将承担所有相关运输和部件返回费用，并指定快递商/承运商。

有关 Hewlett Packard Enterprise 客户自行维修计划的详细信息，请与您当地的服务提供商联系。有关北美地区的计划，请访问 Hewlett Packard Enterprise 网站 (http://www.hpe.com/support/selfrepair)。

仅部件保修服务

您的 Hewlett Packard Enterprise 有限保修服务可能涉及仅部件保修服务。根据仅部件保修服务条款的规定，Hewlett Packard Enterprise 将免费提供更换的部件。

仅部件保修服务要求进行 CSR 部件更换。如果您请求 Hewlett Packard Enterprise 更换这些部件，则必须为该服务支付差旅费和人工费用。

客戶自行維修

Hewlett Packard Enterprise 產品設計了許多「客戶自行維修」(CSR) 的零件以減少維修時間，並且使得更換瑕疵零件時能有更大的彈性。如果在診斷期間，Hewlett Packard Enterprise (或 Hewlett Packard Enterprise 服務供應商或維修夥伴) 辨認出此項維修工作可以藉由使用 CSR 零件來完成，則 Hewlett Packard Enterprise 將直接寄送該零件給您作更換。CSR 零件分為兩種類別：

- **強制的** — 客戶自行維修所使用的零件是強制性的。如果您要求 Hewlett Packard Enterprise 更換這些零件，Hewlett Packard Enterprise 將會向您收取此服務所需的外出費用與勞動成本。
- **選購的** — 客戶自行維修所使用的零件是選購的。這些零件也設計用於客戶自行維修之用。不過，如果您要求 Hewlett Packard Enterprise 為您更換，則可能需要也可能不需要負擔額外的費用，端視針對此產品指定的保固服務類型而定。

備註：某些 Hewlett Packard Enterprise 零件沒有消費者可自行維修的設計。為符合客戶保固，Hewlett Packard Enterprise 需要授權的服務供應商更換零件。這些零件在圖示的零件目錄中，被標示為「否」。

基於材料取得及環境允許的情況下，CSR 零件將於下一個工作日以快遞寄送。在環境的允許下當天或四小時內送達，則可能需要額外的費用。若您需要協助，可致電 Hewlett Packard Enterprise 支援中心，會有一位技術人員透過電話來協助您。不論損壞的零件是否必須退回，Hewlett Packard Enterprise 皆會在與 CSR 替換零件一起運送的材料中註明。若要將損壞的零件退回 Hewlett Packard Enterprise，您必須在指定的一段時間內 (通常為五 (5) 個工作天)，將損壞的零件寄回 Hewlett Packard Enterprise。損壞的零件必須與寄送資料中隨附的相關技術文件一併退還。如果無法退還損壞的零件，Hewlett Packard Enterprise 可能要向您收取替換費用。針對客戶自行維修情形，Hewlett Packard Enterprise 將負責所有運費及零件退還費用，並指定使用何家快遞/貨運公司。

如需 Hewlett Packard Enterprise 的 CSR 方案詳細資訊，請連絡您當地的服務供應商。至於北美方案，請參閱 Hewlett Packard Enterprise 的 CSR 網站frepair (http://www.hpe.com/support/selfrepair)。

僅限零件的保固服務

您的「Hewlett Packard Enterprise 有限保固」可能包含僅限零件的保固服務。在僅限零件的保固服務情況下，Hewlett Packard Enterprise 將免費提供替換零件。

針對僅限零件的保固服務，CSR 零件替換是強制性的。如果您要求 Hewlett Packard Enterprise 更換這些零件，Hewlett Packard Enterprise 將會向您收取此服務所需的外出費用與勞動成本。

고객 셀프 수리

Hewlett Packard Enterprise 제품은 수리 시간을 최소화하고 결함이 있는 부품 교체 시 더욱 융통성을 발휘할 수 있도록 하기 위해 고객 셀프 수리(CSR) 부품을 다량 사용하여 설계되었습니다. 진단 기간 동안 Hewlett Packard Enterprise(또는 Hewlett Packard Enterprise 서비스 공급업체 또는 서비스 협력업체)에서 CSR 부품을 사용하여 수리가 가능하다고 판단되면 Hewlett Packard Enterprise는 해당 부품을 바로 사용자에게 보내어 사용자가 교체할 수 있도록 합니다. CSR 부품에는 두 가지 종류가 있습니다.

- **필수 -** 고객 셀프 수리가 의무 사항인 필수 부품. 사용자가 Hewlett Packard Enterprise에 이 부품의 교체를 요청할 경우 이 서비스에 대한 출장비 및 작업비가 청구됩니다.
- **선택 사항 -** 고객 셀프 수리가 선택 사항인 부품. 이 부품들도 고객 셀프 수리가 가능하도록 설계되었습니다. 하지만 사용자가 Hewlett Packard Enterprise에 이 부품의 교체를 요청할 경우 사용자가 구입한 제품에 해당하는 보증 서비스 유형에 따라 추가 비용 없이 교체가 가능할 수 있습니다.

참고: 일부 Hewlett Packard Enterprise 부품은 고객 셀프 수리가 불가능하도록 설계되었습니다. Hewlett Packard Enterprise는 만족스러운 고객 보증을 위해 공인 서비스 제공업체를 통해 부품을 교체하도록 하고 있습니다. 이러한 부품들은 Illustrated Parts Catalog에 "No"라고 표시되어 있습니다.

CSR 부품은 재고 상태와 지리적 조건이 허용하는 경우 다음 영업일 납품이 가능하도록 배송이 이루어집니다. 지리적 조건이 허용하는 경우 추가 비용이 청구되는 조건으로 당일 또는 4시간 배송이 가능할 수도 있습니다. 도움이 필요하시면 Hewlett Packard Enterprise Support Center로 전화하십시오. 전문 기술자가 전화로 도움을 줄 것입니다. Hewlett Packard Enterprise는 결함이 발생한 부품을 Hewlett Packard Enterprise로 반환해야 하는지 여부를 CSR 교체 부품과 함께 배송된 자료에 지정합니다. 결함이 발생한 부품을 Hewlett Packard Enterprise로 반환해야 하는 경우에는 지정된 기간 내(통상 영업일 기준 5일)에 Hewlett Packard Enterprise로 반환해야 합니다. 이때 결함이 발생한 부품은 제공된 포장 재료에 넣어 관련 설명서와 함께 반환해야 합니다. 결함이 발생한 부품을 반환하지 않는 경우 Hewlett Packard Enterprise가 교체 부품에 대해 비용을 청구할 수 있습니다. 고객 셀프 수리의 경우, Hewlett Packard Enterprise는 모든 운송 및 부품 반환 비용을 부담하며 이용할 운송업체 및 택배 서비스를 결정합니다.

Hewlett Packard Enterprise CSR 프로그램에 대한 자세한 내용은 가까운 서비스 제공업체에 문의하십시오. 북미 지역의 프로그램에 대해서는 Hewlett Packard Enterprise CSR 웹 사이트(http://www.hpe.com/support/selfrepair)를 참조하십시오.

부품 제공 보증 서비스

Hewlett Packard Enterprise 제한 보증에는 부품 제공 보증 서비스가 포함될 수 있습니다. 이러한 경우 Hewlett Packard Enterprise는 부품 제공 보증 서비스의 조건에 따라 교체 부품만을 무료로 제공합니다.

부품 제공 보증 서비스 제공 시 CSR 부품 교체는 의무 사항입니다. 사용자가 Hewlett Packard Enterprise에 이 부품의 교체를 요청할 경우 이 서비스에 대한 출장비 및 작업비가 청구됩니다.

Illustrated parts catalog

Mechanical components

Hewlett Packard Enterprise continually improves and changes product parts. For complete and current supported spare parts information, see the Hewlett Packard Enterprise PartSurfer website:

- Desktop: **http://www.hpe.com/info/partssurfer**
- Mobile: **http://partsurfermobile.ext.hpe.com**

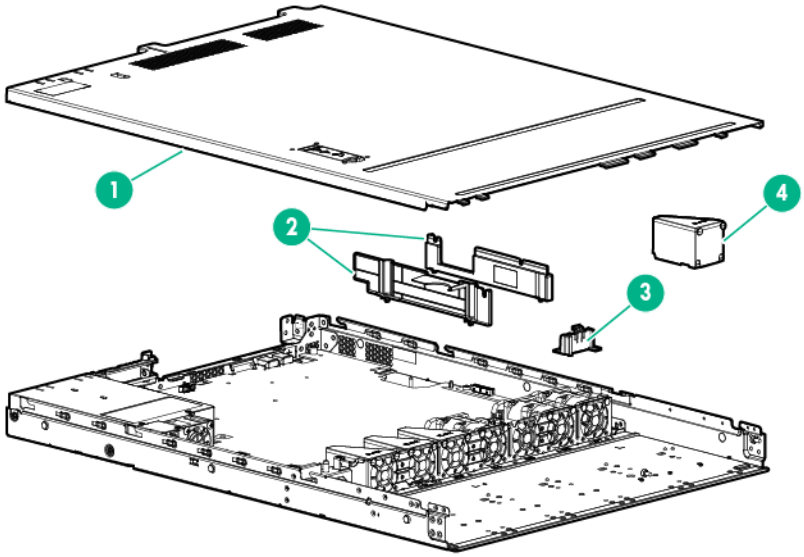

Item	Description	Spare part number	Customer self repair
1	Access panel	779099-001	Mandatory[1]
2	DIMM guard kit (includes two DIMM guards)	868546-001	Optional[2]
3	Smart Storage Battery holder	779102-001	Mandatory[1]
4	Fan blank	779105-001	Mandatory[1]

[1]Mandatory—Parts for which customer self repair is mandatory. If you request Hewlett Packard Enterprise to replace these parts, you will be charged for the travel and labor costs of this service.

[2]Optional—Parts for which customer self repair is optional. These parts are also designed for customer self repair. If, however, you require that Hewlett Packard Enterprise replace them for you, there may or may not be additional charges, depending on the type of warranty service designated for your product.

[3]No—Some Hewlett Packard Enterprise parts are not designed for customer self repair. In order to satisfy the customer warranty, Hewlett Packard Enterprise requires that an authorized service provider replace the part. These parts are identified as "No" in the Illustrated Parts Catalog.

[1]Obligatoire—Pièces pour lesquelles le client doit procéder lui-même aux réparations. Si vous demandez à Hewlett Packard Enterprise de procéder au remplacement de ces pièces, les frais de transport et de main d'œuvre pour ce service vous seront facturés.

[2]Facultatif—Pièces pour lesquelles une réparation par le client est facultative. Ces pièces sont également conçues pour que le client puisse procéder lui-même aux réparations. Cependant, les frais supplémentaires engendrés par le remplacement de ces pièces par Hewlett Packard Enterprise dépendent du type de service de garantie désigné pour votre produit.

[3]Non—Certaines pièces Hewlett Packard Enterprise ne sont pas conçues pour être remplacées par le client. Afin de se conformer aux exigences de la garantie la garantie du client, Hewlett Packard Enterprise demande à un fournisseur de services agréé de procéder au remplacement de la pièce. Ces pièces sont signaléespar le mot « Non » dans le Catalogue de pièces illustré.

[1]Obbligatorio—Parti per le quali il cliente è tenuto a effettuare autonomamente la riparazione. Se si richiede l'intervento di Hewlett Packard Enterprise per la sostituzione di queste parti, al cliente verranno addebitate le spese di viaggio e manodopera dell'operazione.

[2]Facoltativo—Parti per le quali la riparazione in autonomia da parte del cliente è facoltativa. Queste parti sono progettate per consentire anche la riparazione da parte del cliente. Tuttavia, se il cliente richiedel'intervento di Hewlett Packard Enterprise per la sostituzione, potrebbero essere addebitate spese aggiuntive a seconda del tipo di garanzia in assistenza previsto per il prodotto.

[3]No—Alcune parti Hewlett Packard Enterprise non sono progettate la riparazione in autonomia da parte del cliente. In base a quanto previsto dalla garanzia per il cliente, Hewlett Packard Enterprise richiede l'intervento di un tecnico autorizzato per la sostituzione della parte. Queste parti sono contrassegnate con"No"nel catalogo parti illustrato.

[1]Zwingend—Teile, für die das Customer Self Repair-Verfahren zwingend vorgegeben ist. Wenn Sie den Austausch dieser Teile von Hewlett Packard Enterprisevornehmen lassen, werden Ihnen die Anfahrt- und Arbeitskosten für diesen Service berechnet.

[2]Optional—Teile, für die das Customer Self Repair-Verfahren optional ist. Diese Teile sind auch für Customer Self Repair ausgelegt. Wenn Sie jedoch den Austausch dieser Teile von Hewlett Packard Enterprisevornehmen lassen möchten, können bei diesem Service je nach den für Ihr Produkt vorgesehenen Garantiebedingungen zusätzliche Kosten anfallen.

[3]Nein—Einige Hewlett Packard Enterprise Teile sind nicht für Customer Self Repair ausgelegt. Um den Garantieanspruch des Kunden zu erfüllen, muss das Teil von einem Hewlett Packard Enterprise Servicepartner ersetzt werden. Im illustrierten Teilekatalog sind diese Teile mit „No“ bzw. „Nein“ gekennzeichnet.

[1]Obligatorio—Componentes cuya reparación por parte del usuario es obligatoria. Si solicita a Hewlett Packard Enterprise que realice la sustitución de estos componentes, tendrá que hacerse cargo de los gastos de desplazamiento y de mano de obra de dicho servicio.

[2]Opcional—Componentes cuya reparación por parte del usuario es opcional. Estos componentes también están diseñados para que puedan ser reparados por el usuario. Sin embargo, si precisa que Hewlett Packard Enterprise realice su sustitución, puede o no conllevar costes adicionales, dependiendo del tipo de servicio de garantía correspondiente al producto.

[3]No—Algunos componentes de Hewlett Packard Enterprise no están diseñados para que puedan ser reparados por el usuario. Para que el usuario haga valer su garantía, Hewlett Packard Enterprise pone como condición que un proveedor de servicios autorizado realice la sustitución de estos componentes. Dichos componentes se identifican con la palabra "No" en el catálogo ilustrado de componentes.

[1]Verplicht—Onderdelen die de klant zelf moet vervangen. Als u Hewlett Packard Enterprise vraagt deze onderdelen te vervangen, worden er reis- en arbeidskosten voor deze service in rekening gebracht.

[2]Optioneel—Onderdelen die de klant zelf kan vervangen. Deze onderdelen zijn ook ontworpen om door de klant zelf te worden vervangen. Als u Hewlett Packard Enterprise verzoekt om deze te vervangen, kan het zijn dat hiervoor extra kosten in rekening worden gebracht, afhankelijk van het soort garantie dat op uw product van toepassing is.

[3]Geen—Sommige onderdelen van Hewlett Packard Enterprise zijn niet ontworpen om door de klant zelf te worden vervangen. Om te voldoen aan de garantievoorwaarden eist Hewlett Packard Enterprise dat een geautoriseerde serviceverlener het onderdeel vervangt. Deze onderdelen worden aangeduid met 'Geen' in de geïllustreerde onderdelencatalogus.

[1]Obrigatório—Peças cujo reparo feito pelo cliente é obrigatório. Se desejar que a Hewlett Packard Enterprise substitua essas peças, serão cobradas as despesas de transporte e mão-de-obra do serviço.

[2]Opcional—Peças cujo reparo feito pelo cliente é opcional. Essas peças também são projetadas para o reparo feito pelo cliente. No entanto, se desejar que a Hewlett Packard Enterprise as substitua, pode haver ou não a cobrança de taxa adicional, dependendo do tipo de serviço de garantia destinado ao produto.

[3]Não—Algumas peças da Hewlett Packard Enterprise não são projetadas para o reparo feito pelo cliente. A fim de cumprir a garantia do cliente, a Hewlett Packard Enterprise exige que um técnico autorizado substitua a peça. Essas peças estão identificadas com a marca "No" (Não), no catálogo de peças ilustrado.

[1]Mandatory：必須 — カスタマーセルフリペアが必須の部品。当該部品について、もしもお客様がHewlett Packard Enterpriseに交換作業を依頼される場合には、その修理サービスに関する交通費および人件費がお客様に請求されます。
[2]Optional：任意 — カスタマーセルフリペアが任意である部品。この部品もカスタマーセルフリペア用です。当該部品について、もしもお客様がHewlett Packard Enterpriseに交換作業を依頼される場合には、お買い上げの製品に適用される保証サービス内容の範囲内においては、別途費用を負担していただくことなく保証サービスを受けることができます。
[3]No：除外 — Hewlett Packard Enterprise製品の一部の部品は、カスタマーセルフリペアの対象外です。製品の保証を継続するためには、Hewlett Packard EnterpriseまたはHewlett Packard Enterprise正規保守代理店による交換作業が必須となります。部品カタログには、当該部品がカスタマーセルフリペア除外品である旨が記載されています。

[1]Mandatory — 客户必须自行维修的部件。如果您请求 Hewlett Packard Enterprise 更换这些部件，则必须为该服务支付差旅费和人工费用。
[2]Optional — 客户可以选择是否自行维修的部件。这些部件也是为客户自行维修设计的。不过，如果您要求 Hewlett Packard Enterprise 为您更换这些部件，则根据为您的产品指定的保修服务类型，Hewlett Packard Enterprise 可能收取或不再收取任何附加费用。
[3]No — 某些 Hewlett Packard Enterprise 部件的设计并未考虑客户自行维修。为了满足客户保修的需要，Hewlett Packard Enterprise 要求授权服务提供商更换相关部件。这些部件在部件图解目录中标记为“否”。

[1]Mandatory — 客戶自行維修所使用的零件是強制性的。如果您要求 Hewlett Packard Enterprise 更換這些零件，Hewlett Packard Enterprise 將會向您收取此服務所需的外出費用與勞動成本。
[2]Optional — 客戶自行維修所使用的零件是選購的。這些零件也設計用於客戶自行維修之用。不過，如果您要求 Hewlett Packard Enterprise 為您更換，則可能需要也可能不需要負擔額外的費用，端視針對此產品指定的保固服務類型而定。
[3]No — 某些 Hewlett Packard Enterprise 零件沒有消費者可自行維修的設計。為符合客戶保固，Hewlett Packard Enterprise 需要授權的服務供應商更換零件。這些零件在圖示的零件目錄中，被標示為「否」。

[1]Mandatory — 고객 셀프 수리가 의무 사항인 필수 부품. 사용자가 Hewlett Packard Enterprise에 이 부품의 교체를 요청할 경우 해당 서비스에 대한 출장비 및 작업비가 청구됩니다.
[2]Optional — 고객 셀프 수리가 선택 사항인 부품. 이러한 부품들도 고객 셀프 수리가 가능하도록 설계되었습니다. 하지만 사용자가 Hewlett Packard Enterprise에 이러한 부품의 교체를 요청할 경우 사용자가 구입한 제품에 해당하는 보증 서비스 유형에 따라 추가 비용 없이 교체가 가능할 수 있습니다.
[3]No — 일부 Hewlett Packard Enterprise 부품은 고객 셀프 수리가 불가능하도록 설계되었습니다. Hewlett Packard Enterprise는 만족스러운 고객 보증을 위해 공인 서비스 제공업체를 통해 부품을 교체하도록 요구하고 있습니다. 이러한 부품들은 Illustrated Parts Catalog에 “No”라고 표시되어 있습니다.

System components

Hewlett Packard Enterprise continually improves and changes product parts. For complete and current supported spare parts information, see the Hewlett Packard Enterprise PartSurfer website:

- Desktop: **http://www.hpe.com/info/partssurfer**
- Mobile: **http://partsurfermobile.ext.hpe.com**

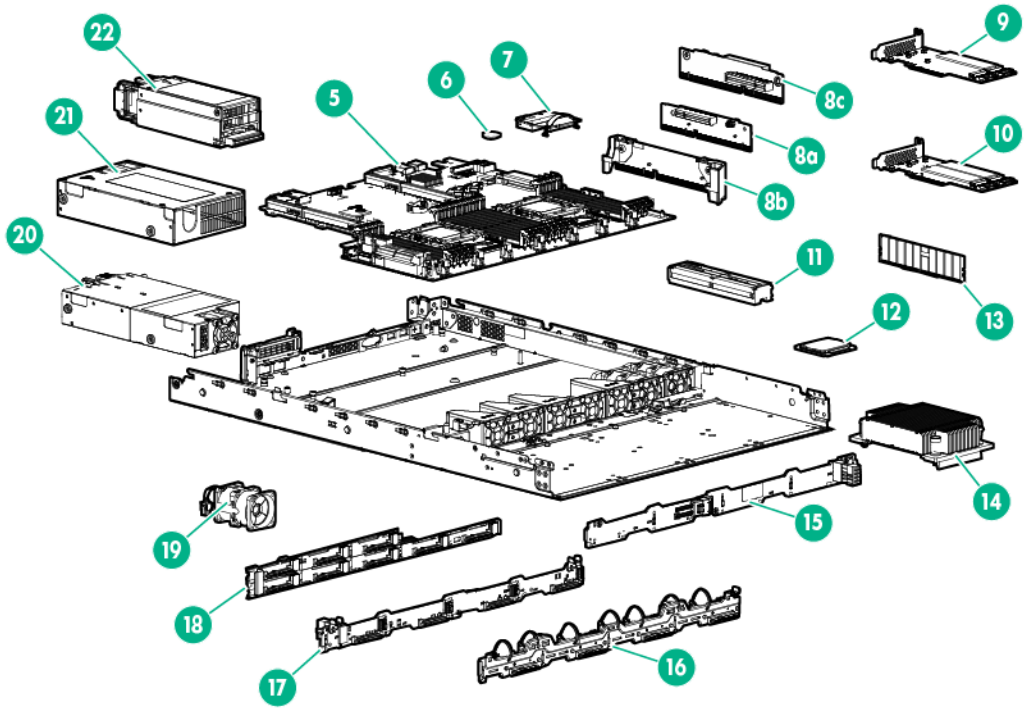

Item	Description	Spare part number	Customer self repair
5	System boards (include alcohol pad and thermal compound)	—	—
	a) System board for Intel Xeon E5-2600 v3 processors	779094-001	Optional[2]
	b) System board for Intel Xeon E5-2600 v3 and v4 processors	848082-001	Optional[2]
6	System battery	319603-001	Mandatory[1]
7	Dedicated iLO management module	779095-001	Mandatory[1]
8	PCIe riser boards	—	—
	a) Primary PCIe riser board	779098-001	Mandatory[1]
	b) Secondary PCIe riser assembly	779106-001	Mandatory[1]
	c) FlexibleLOM riser board	785786-001	Optional[2]
9	M.2 SSD single module enablement kit	797907-001	Optional[2]
	a) M.2 SSD enablement board	—	—
	b) M.2 SSD module	—	—
	c) SATA cable*	—	—
10	M.2 SSD dual module enablement kit	797908-001	Optional[2]
	a) M.2 SSD enablement board	—	—
	b) M.2 SSD modules (2)	—	—

Table Continued

Item	Description	Spare part number	Customer self repair
	c) SATA cables (2)*	—	—
11	Smart Storage Battery	871264-001	Mandatory[1]
12	Processors (include alcohol pad and thermal compound)**	—	—
	Intel Xeon E5-2600 v3 processors		
	a) 1.60-GHz Intel Xeon E5-2603 v3, 6C, 85 W	762441-001	Optional[2]
	b) 1.80-GHx Intel Xeon E5-2630L v3, 8C, 55W*	762459-001	Optional[2]
	c) 1.80-GHz Intel Xeon E5-2650L v3, 12C, 65 W*	762461-001	Optional[2]
	d) 1.90-GHz Intel Xeon E5-2609 v3, 6C, 85 W*	762443-001	Optional[2]
	e) 2.30-GHz Intel Xeon E5-2650 v3, 10C, 105 W*	762448-001	Optional[2]
	f) 2.40-GHz Intel Xeon E5-2620 v3, 6C, 85 W*	762445-001	Optional[2]
	g) 2.40-GHz Intel Xeon E5-2630 v3, 8C, 85 W*	762446-001	Optional[2]
	h) 2.60-GHz Intel Xeon E5-2640 v3, 8C, 90 W*	762447-001	Optional[2]
	i) 2.60-GHz Intel Xeon E5-2660 v3, 10C, 105 W*	762449-001	Optional[2]
	j) 3.00-GHz Intel Xeon E5-2623 v3, 4C, 105 W*	780762-001	Optional[2]
	Intel Xeon E5-2600 v4 processors		
	a) 1.70 GHz Intel Xeon E5-2603 v4, 6C, 85 W	835599-001	Optional[2]
	b) 1.70 GHz Intel Xeon E5-2609 v4, 8C, 85 W*	835600-001	Optional[2]
	c) 1.70 GHz Intel Xeon E5-2650L v4, 14C, 65 W*	835609-001	Optional[2]
	d) 1.80 GHz Intel Xeon E5-2630L v4, 10C, 55 W*	835608-001	Optional[2]
	e) 2.00 GHz Intel Xeon E5-2660 v4, 14C, 105 W	835605-001	Optional[2]
	f) 2.10 GHz Intel Xeon E5-2620 v4, 8C, 85 W*	835601-001	Optional[2]
	g) 2.10 GHz Intel Xeon E5-2683 v4, 16C, 120 W*†	835614-001	Optional[2]

Table Continued

Item	Description	Spare part number	Customer self repair
	h) 2.10 GHz Intel Xeon E5-2695 v4, 18C, 120 W*†	835615-001	Optional[2]
	i) 2.20 GHz Intel Xeon E5-2630 v4, 10C, 85 W*	835602-001	Optional[2]
	j) 2.20 GHz Intel Xeon E5-2650 v4, 12C, 105 W*	835604-001	Optional[2]
	k) 2.40 GHz Intel Xeon E5-2640 v4, 10C, 90 W*	835603-001	Optional[2]
	l) 2.40 GHz Intel Xeon E5-2680 v4, 14C, 120 W*†	835606-001	Optional[2]
	m) 2.60 GHz Intel Xeon E5-2623 v4, 4C, 85 W*	835610-001	Optional[2]
13	DIMMs	—	—
	DIMMs designed for the Intel Xeon E5-2600 v3 processors		
	a) 4 GB, single-rank x8 PC4-2133P-R	804842-001	Mandatory[1]
	b) 4 GB, single-rank x8 PC4-2133R-15*	774169-001	Mandatory[1]
	c) 8 GB, single-rank x4 PC4-2133R-15*	774170-001	Mandatory[1]
	d) 8 GB, single-rank x8 PC4-2133P-R*	804843-001	Mandatory[1]
	e) 8 GB, dual-rank x8 PC4-2133P-R*	774171-001	Mandatory[1]
	f) 16 GB, dual-rank x4 PC4-2133R-15*	774172-001	Mandatory[1]
	g) 16 GB, dual-rank x4 PC4-2133P-L*	774173-001	Mandatory[1]
	h) 32 GB, dual-rank x4 PC4-2133P-R*	774175-001	Mandatory[1]
	i) 32 GB, quad-rank x4 PC4-2133P-L*	774174-001	Mandatory[1]
	j) 64 GB, quad-rank x4 PC4-2133P-L*	774176-001	Mandatory[1]
	DIMMs designed for the Intel Xeon E5-2600 v4 processors		
	a) 8 GB, single-rank x4 PC4-2400T-R*	819410-001	Mandatory[1]
	b) 16 GB, single-rank x8 PC4-2400T-R*	819411-001	Mandatory[1]
	c) 16 GB, dual-rank x4 PC4-2400T-R*	846740-001	Mandatory[1]
	d) 32 GB, dual-rank x4 PC4-2400T-R*	819412-001	Mandatory[1]
	e) 32 GB, dual-rank x4 PC4-2400T-L*	819414-001	Mandatory[1]
	f) 64 GB, quad-rank x4 PC4-2400T-L*	819413-001	Mandatory[1]
14	Heatsink	779104-001	Optional[2]
15	4-bay LFF hot plug drive backplane	779096-001	Optional[2]
16	4-bay LFF non-hot-plug drive backplane assembly	779107-001	Optional[2]

Table Continued

Item	Description	Spare part number	Customer self repair
17	4-bay LFF hot plug drive backplane assembly	779108-001	Optional[2]
18	8-bay SFF hot plug drive backplane	780428-001	Optional[2]
19	Hot-swap fan	779103-001	Mandatory[1]
20	RPS backplane assemblies		
	a) AC RPS backplane assembly	784636-001	Optional[2]
	b) AC/240 V DC RPS backplane assembly*	830022-001	Optional[2]
21	HPE 550 W Power Supply (non-hot-plug)	766879-001	Optional[2]
22	Hot-plug power input modules		
	a) HPE 800 W/900 W Gold AC Power Input Module	754376-001	Mandatory[1]
	b) HPE 900 W AC/240 V DC Gold Power Input Module	830219-001	Mandatory[1]
23	Front I/O module for LFF drive models*	779100-001	Optional[2]
24	Front I/O module for SFF drive models*	779101-001	Optional[2]
25	Cables	—	—
	a) 8-bay SFF drive power cable*	782422-001	Mandatory[1]
	b) 8-bay SFF Mini-SAS cable*	782423-001	Mandatory[1]
	c) Front USB 3.0 cable*	782424-001	Mandatory[1]
	d) 4-bay LFF drive power cable*	782425-001	Mandatory[1]
	e) 4-bay LFF Mini-SAS cable*	782426-001	Mandatory[1]
	f) 4-bay LFF non-hot-plug drive power and Mini-SAS cable*	782427-001	Mandatory[1]
	g) 4-bay LFF Smart Array controller Mini-SAS cable*	782428-001	Mandatory[1]
	h) 4-bay LFF HBA Mini-SAS cable*	782429-001	Mandatory[1]
	i) 8-bay SFF Smart Array controller Mini-SAS cable*	782430-001	Mandatory[1]
	j) 8-bay SFF HBA Mini-SAS cable*	782431-001	Mandatory[1]
	k) FlexibleLOM sideband cable*	789801-001	Mandatory[1]
26	Trusted Platform Module	—	—
	a) TPM 1.2*	505836-001	No[3]
	b) TPM 2.0*	812119-001	No[3]

*Not shown

**All processors in this HPE ProLiant server must have the same cache size, speed, number of cores, and rated maximum power consumption.

†Intel Xeon E5-2600 v4 processors with a Thermal Design Power higher than 105 W are only supported in the system board spare 848082-001.

[1]Mandatory—Parts for which customer self repair is mandatory. If you request Hewlett Packard Enterprise to replace these parts, you will be charged for the travel and labor costs of this service.

[2]Optional—Parts for which customer self repair is optional. These parts are also designed for customer self repair. If, however, you require that Hewlett Packard Enterprise replace them for you, there may or may not be additional charges, depending on the type of warranty service designated for your product.

[3]No—Some Hewlett Packard Enterprise parts are not designed for customer self repair. In order to satisfy the customer warranty, Hewlett Packard Enterprise requires that an authorized service provider replace the part. These parts are identified as "No" in the Illustrated Parts Catalog.

[1]Obligatoire—Pièces pour lesquelles le client doit procéder lui-même aux réparations. Si vous demandez à Hewlett Packard Enterprise de procéder au remplacement de ces pièces, les frais de transport et de main d'œuvre pour ce service vous seront facturés.

[2]Facultatif—Pièces pour lesquelles une réparation par le client est facultative. Ces pièces sont également conçues pour que le client puisse procéder lui-même aux réparations. Cependant, les frais supplémentaires engendrés par le remplacement de ces pièces par Hewlett Packard Enterprise dépendent du type de service de garantie désigné pour votre produit.

[3]Non—Certaines pièces Hewlett Packard Enterprise ne sont pas conçues pour être remplacées par le client. Afin de se conformer aux exigences de la garantie la garantie du client, Hewlett Packard Enterprise demande à un fournisseur de services agréé de procéder au remplacement de la pièce. Ces pièces sont signaléespar le mot « Non » dans le Catalogue de pièces illustré.

[1]Obbligatorio—Parti per le quali il cliente è tenuto a effettuare autonomamente la riparazione. Se si richiede l'intervento di Hewlett Packard Enterprise per la sostituzione di queste parti, al cliente verranno addebitate le spese di viaggio e manodopera dell'operazione.

[2]Facoltativo—Parti per le quali la riparazione in autonomia da parte del cliente è facoltativa. Queste parti sono progettate per consentire anche la riparazione da parte del cliente. Tuttavia, se il cliente richiedel'intervento di Hewlett Packard Enterprise per la sostituzione, potrebbero essere addebitate spese aggiuntive a seconda del tipo di garanzia in assistenza previsto per il prodotto.

[3]No—Alcune parti Hewlett Packard Enterprise non sono progettate la riparazione in autonomia da parte del cliente. In base a quanto previsto dalla garanzia per il cliente, Hewlett Packard Enterprise richiede l'intervento di un tecnico autorizzato per la sostituzione della parte. Queste parti sono contrassegnate con"No"nel catalogo parti illustrato.

[1]Zwingend—Teile, für die das Customer Self Repair-Verfahren zwingend vorgegeben ist. Wenn Sie den Austausch dieser Teile von Hewlett Packard Enterprisevornehmen lassen, werden Ihnen die Anfahrt- und Arbeitskosten für diesen Service berechnet.

[2]Optional—Teile, für die das Customer Self Repair-Verfahren optional ist. Diese Teile sind auch für Customer Self Repair ausgelegt. Wenn Sie jedoch den Austausch dieser Teile von Hewlett Packard Enterprisevornehmen lassen möchten, können bei diesem Service je nach den für Ihr Produkt vorgesehenen Garantiebedingungen zusätzliche Kosten anfallen.

[3]Nein—Einige Hewlett Packard Enterprise Teile sind nicht für Customer Self Repair ausgelegt. Um den Garantieanspruch des Kunden zu erfüllen, muss das Teil von einem Hewlett Packard Enterprise Servicepartner ersetzt werden. Im illustrierten Teilekatalog sind diese Teile mit „No“ bzw. „Nein“ gekennzeichnet.

[1]Obligatorio—Componentes cuya reparación por parte del usuario es obligatoria. Si solicita a Hewlett Packard Enterprise que realice la sustitución de estos componentes, tendrá que hacerse cargo de los gastos de desplazamiento y de mano de obra de dicho servicio.

[2]Opcional—Componentes cuya reparación por parte del usuario es opcional. Estos componentes también están diseñados para que puedan ser reparados por el usuario. Sin embargo, si precisa que Hewlett Packard Enterprise realice su sustitución, puede o no conllevar costes adicionales, dependiendo del tipo de servicio de garantía correspondiente al producto.

[3]No—Algunos componentes de Hewlett Packard Enterprise no están diseñados para que puedan ser reparados por el usuario. Para que el usuario haga valer su garantía, Hewlett Packard Enterprise pone

como condición que un proveedor de servicios autorizado realice la sustitución de estos componentes. Dichos componentes se identifican con la palabra "No" en el catálogo ilustrado de componentes.

[1]Verplicht—Onderdelen die de klant zelf moet vervangen. Als u Hewlett Packard Enterprise vraagt deze onderdelen te vervangen, worden er reis- en arbeidskosten voor deze service in rekening gebracht.

[2]Optioneel—Onderdelen die de klant zelf kan vervangen. Deze onderdelen zijn ook ontworpen om door de klant zelf te worden vervangen. Als u Hewlett Packard Enterprise verzoekt om deze te vervangen, kan het zijn dat hiervoor extra kosten in rekening worden gebracht, afhankelijk van het soort garantie dat op uw product van toepassing is.

[3]Geen—Sommige onderdelen van Hewlett Packard Enterprise zijn niet ontworpen om door de klant zelf te worden vervangen. Om te voldoen aan de garantievoorwaarden eist Hewlett Packard Enterprise dat een geautoriseerde serviceverlener het onderdeel vervangt. Deze onderdelen worden aangeduid met 'Geen' in de geïllustreerde onderdelencatalogus.

[1]Obrigatório—Peças cujo reparo feito pelo cliente é obrigatório. Se desejar que a Hewlett Packard Enterprise substitua essas peças, serão cobradas as despesas de transporte e mão-de-obra do serviço.

[2]Opcional—Peças cujo reparo feito pelo cliente é opcional. Essas peças também são projetadas para o reparo feito pelo cliente. No entanto, se desejar que a Hewlett Packard Enterprise as substitua, pode haver ou não a cobrança de taxa adicional, dependendo do tipo de serviço de garantia destinado ao produto.

[3]Não—Algumas peças da Hewlett Packard Enterprise não são projetadas para o reparo feito pelo cliente. A fim de cumprir a garantia do cliente, a Hewlett Packard Enterprise exige que um técnico autorizado substitua a peça. Essas peças estão identificadas com a marca "No" (Não), no catálogo de peças ilustrado.

[1]Mandatory：必須 — カスタマーセルフリペアが必須の部品。当該部品について、もしもお客様がHewlett Packard Enterpriseに交換作業を依頼される場合には、その修理サービスに関する交通費および人件費がお客様に請求されます。
[2]Optional：任意 — カスタマーセルフリペアが任意である部品。この部品もカスタマーセルフリペア用です。当該部品について、もしもお客様がHewlett Packard Enterpriseに交換作業を依頼される場合には、お買い上げの製品に適用される保証サービス内容の範囲内においては、別途費用を負担していただくことなく保証サービスを受けることができます。
[3]No：除外 — Hewlett Packard Enterprise製品の一部の部品は、カスタマーセルフリペアの対象外です。製品の保証を継続するためには、Hewlett Packard EnterpriseまたはHewlett Packard Enterprise正規保守代理店による交換作業が必須となります。部品カタログには、当該部品がカスタマーセルフリペア除外品である旨が記載されています。

[1]Mandatory — 客户必须自行维修的部件。如果您请求 Hewlett Packard Enterprise 更换这些部件，则必须为该服务支付差旅费和人工费用。
[2]Optional — 客户可以选择是否自行维修的部件。这些部件也是为客户自行维修设计的。不过，如果您要求 Hewlett Packard Enterprise 为您更换这些部件，则根据为您的产品指定的保修服务类型，Hewlett Packard Enterprise 可能收取或不再收取任何附加费用。
[3]No — 某些 Hewlett Packard Enterprise 部件的设计并未考虑客户自行维修。为了满足客户保修的需要，Hewlett Packard Enterprise 要求授权服务提供商更换相关部件。这些部件在部件图解目录中标记为“否”。

[1]Mandatory — 客戶自行維修所使用的零件是強制性的。如果您要求 Hewlett Packard Enterprise 更換這些零件，Hewlett Packard Enterprise 將會向您收取此服務所需的外出費用與勞動成本。
[2]Optional — 客戶自行維修所使用的零件是選購的。這些零件也設計用於客戶自行維修之用。不過，如果您要求 Hewlett Packard Enterprise 為您更換，則可能需要也可能不需要負擔額外的費用，端視針對此產品指定的保固服務類型而定。
[3]No — 某些 Hewlett Packard Enterprise 零件沒有消費者可自行維修的設計。為符合客戶保固，Hewlett Packard Enterprise 需要授權的服務供應商更換零件。這些零件在圖示的零件目錄中，被標示為「否」。

[1]Mandatory — 고객 셀프 수리가 의무 사항인 필수 부품. 사용자가 Hewlett Packard Enterprise에 이 부품의 교체를 요청할 경우 해당 서비스에 대한 출장비 및 작업비가 청구됩니다.
[2]Optional — 고객 셀프 수리가 선택 사항인 부품. 이러한 부품들도 고객 셀프 수리가 가능하도록 설계되었습니다. 하지만 사용자가 Hewlett Packard Enterprise에 이러한 부품의 교체를 요청할 경우 사용자가 구입한 제품에 해당하는 보증 서비스 유형에 따라 추가 비용 없이 교체가 가능할 수 있습니다.
[3]No — 일부 Hewlett Packard Enterprise 부품은 고객 셀프 수리가 불가능하도록 설계되었습니다. Hewlett Packard Enterprise는 만족스러운 고객 보증을 위해 공인 서비스 제공업체를 통해 부품을 교체하도록 요구하고 있습니다. 이러한 부품들은 Illustrated Parts Catalog에 “No”라고 표시되어 있습니다.

Removal and replacement procedures

Required tools

You need the following items for some procedures:

- T-25 Torx screwdriver (for screws located inside the front panel quick-release levers)
- T-10/T-15 Torx screwdriver
- Flathead screwdriver (for replacing the system battery)
- **Insight Diagnostics**

Safety considerations

Before performing service procedures, review all the safety information.

Preventing electrostatic discharge

About this task

To prevent damaging the system, be aware of the precautions you must follow when setting up the system or handling parts. A discharge of static electricity from a finger or other conductor may damage system boards or other static-sensitive devices. This type of damage may reduce the life expectancy of the device.

Procedure

- Avoid hand contact by transporting and storing products in static-safe containers.
- Keep electrostatic-sensitive parts in their containers until they arrive at static-free workstations.
- Place parts on a grounded surface before removing them from their containers.
- Avoid touching pins, leads, or circuitry.
- Always be properly grounded when touching a static-sensitive component or assembly.

Symbols on equipment

The following symbols might be found on the equipment to indicate the presence of potentially hazardous conditions.



This symbol indicates the presence of hazardous energy circuits or electric shock hazards. Refer all servicing to qualified personnel.

WARNING: To reduce the risk of injury from electric shock hazards, do not open this enclosure. Refer all maintenance, upgrades, and servicing to qualified personnel.



This symbol indicates the presence of electric shock hazards. The area contains no user or field serviceable parts. Do not open for any reason.

WARNING: To reduce the risk of injury from electric shock hazards, do not open this enclosure.



This symbol on an RJ-45 receptacle indicates a network interface connection.

WARNING: To reduce the risk of electric shock, fire, or damage to the equipment, do not plug telephone or telecommunications connectors into this receptacle.



This symbol indicates the presence of a hot surface or hot component. If this surface is contacted, the potential for injury exists.

WARNING: To reduce the risk of injury from a hot component, allow the surface to cool before touching.



This symbol indicates that the component exceeds the recommended weight for one individual to handle safely.

WARNING: To reduce the risk of personal injury or damage to the equipment, observe local occupational health and safety requirements and guidelines for manual material handling.



These symbols, on power supplies or systems, indicate that the equipment is supplied by multiple sources of power.

WARNING: To reduce the risk of injury from electric shock, remove all power cords to disconnect power from the system completely.

Server warnings and cautions

WARNING:

This server is heavy. To reduce the risk of personal injury or damage to the equipment:

- Observe local occupational health and safety requirements and guidelines for manual material handling.
- Get help to lift and stabilize the product during installation or removal, especially when the product is not fastened to the rails. Hewlett Packard Enterprise recommends that a minimum of two people are required for all rack server installations. A third person may be required to help align the server if the server is installed higher than chest level.
- Use caution when installing the server in or removing the server from the rack; it is unstable when not fastened to the rails.

WARNING:
To reduce the risk of personal injury from hot surfaces, allow the drives and the internal system components to cool before touching them.

WARNING:
To reduce the risk of personal injury, electric shock, or damage to the equipment, remove the power cord to remove power from the server. Pressing the Power On/Standby button does not shut off system power completely. Portions of the power supply and some internal circuitry remain active until AC power is removed.

CAUTION:
Protect the server from power fluctuations and temporary interruptions with a regulating uninterruptible power supply. This device protects the hardware from damage caused by power surges and voltage spikes and keeps the system in operation during a power failure.

CAUTION:
Do not operate the server for long periods with the access panel open or removed. Operating the server in this manner results in improper airflow and improper cooling that can lead to thermal damage.

Rack warnings

WARNING:
To reduce the risk of personal injury or damage to the equipment, be sure that:

- The leveling jacks are extended to the floor.
- The full weight of the rack rests on the leveling jacks.
- The stabilizing feet are attached to the rack if it is a single-rack installation.
- The racks are coupled together in multiple-rack installations.
- Only one component is extended at a time. A rack may become unstable if more than one component is extended for any reason.

WARNING:
To reduce the risk of personal injury or equipment damage when unloading a rack:

- At least two people are needed to safely unload the rack from the pallet. An empty 42U rack can weigh as much as 115 kg (253 lb), can stand more than 2.1 m (7 ft) tall, and might become unstable when being moved on its casters.
- Never stand in front of the rack when it is rolling down the ramp from the pallet. Always handle the rack from both sides.

WARNING:
To reduce the risk of personal injury or damage to the equipment, adequately stabilize the rack before extending a component outside the rack. Extend only one component at a time. A rack may become unstable if more than one component is extended.

WARNING:
When installing a server in a telco rack, be sure that the rack frame is adequately secured at the top and bottom to the building structure.

Preparation procedures

About this task

To access some components and perform certain service procedures, you must perform one or more of the following procedures:

Procedure

- **Access the product front panel**.
- **Power down the server**.

  If you must remove a server from a rack or a non-hot-plug component from a server, power down the server.
- **Extend the server from the rack**.

If you are performing service procedures in a Hewlett Packard Enterprise, Compaq branded, Telco, or third-party rack cabinet, you can use the locking feature of the rack rails to support the server and gain access to internal components.

For more information about Telco rack solutions, see the **RackSolutions website**.

- **Access the product rear panel**.
- **Remove the server from the rack**.

  If the rack environment, cabling configuration, or the server location in the rack creates awkward conditions, remove the server from the rack.
- **Remove the access panel**.
- **Remove the PCIe riser cage**.

Remove the security bezel (optional)

About this task

The security bezel is only supported in servers using the quick-release latch rack ears.

Procedure

- To access the front panel components, unlock and then remove the security bezel.

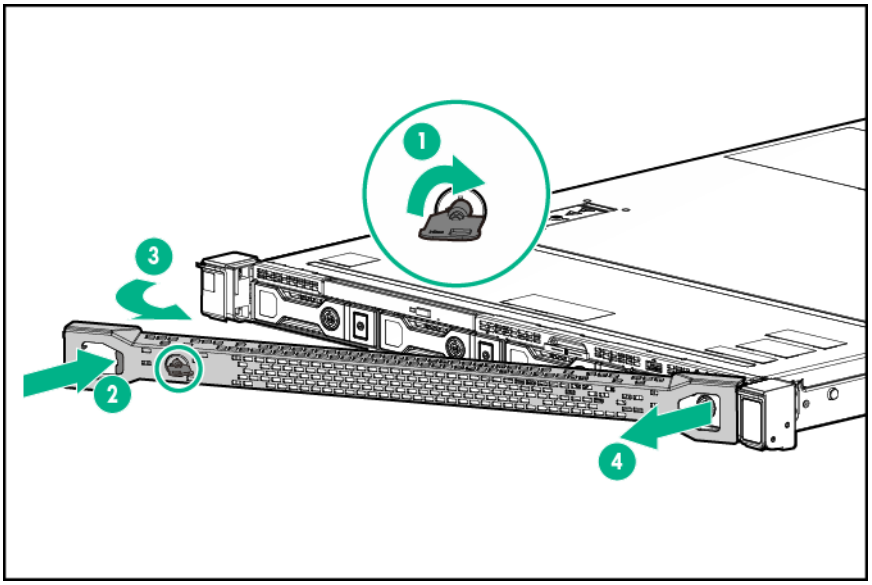

Power down the server

Prerequisites

Before powering down the server for any upgrade or maintenance procedures, perform a backup of critical server data and programs.

IMPORTANT:
When the server is in standby mode, auxiliary power is still being provided to the system.

About this task

To power down the server, use one of the following methods:

Procedure

- Press and release the Power On/Standby button.

This method initiates a controlled shutdown of applications and the OS before the server enters standby mode.

- Press and hold the Power On/Standby button for more than 4 seconds to force the server to enter standby mode.

  This method forces the server to enter standby mode without properly exiting applications and the OS. If an application stops responding, you can use this method to force a shutdown.
- Use a virtual power button selection through iLO 4.

  This method initiates a controlled remote shutdown of applications and the OS before the server enters standby mode.

Before proceeding, verify the server is in standby mode by observing that the system power LED is amber.

Extend the server from the rack

Procedure

1. **Power down the server**.
2. Remove all power:
   a. Disconnect each power cord from the power source.
   b. Disconnect each power cord from the server.
3. Disconnect all peripheral cables from the server.

WARNING:
To reduce the risk of personal injury or equipment damage, be sure that the rack is adequately stabilized before extending a component from the rack.

WARNING:
To reduce the risk of personal injury, be careful when pressing the server rail-release latches and sliding the server into the rack. The sliding rails could pinch your fingers.

4. Do one of the following:
   - In a server that uses thumbscrew rack ears, loosen the captive thumbscrews that secure the server faceplate to the front of the rack, and then slide the server out of the rack.

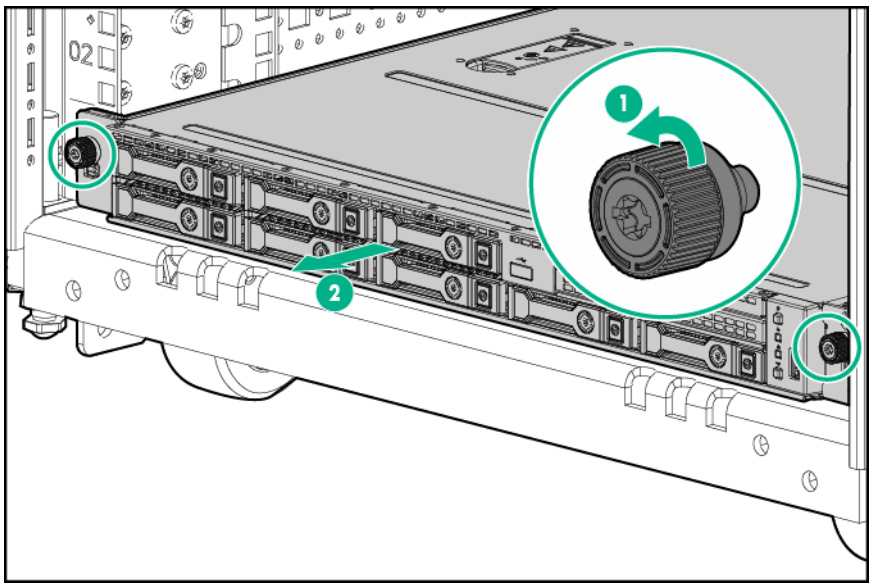

- In a server that uses quick-release latch rack ears:
  a. Open the latches on both sides of the server.
  b. If necessary, use a T-25 Torx screwdriver to loosen the shipping screws.
  c. Slide the server out of the rack.

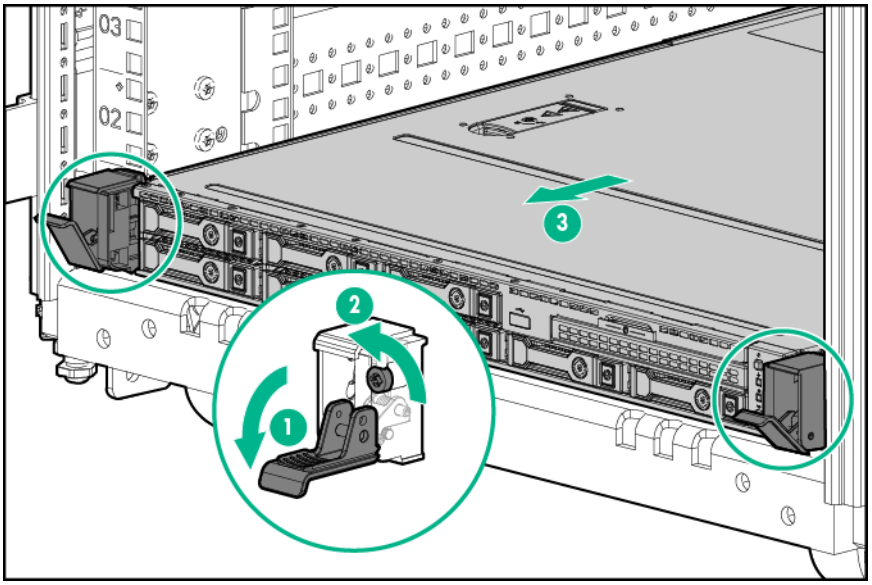

5. After the installation or maintenance procedure, slide the server back into the rack, and then press the server firmly into the rack to secure it in place.

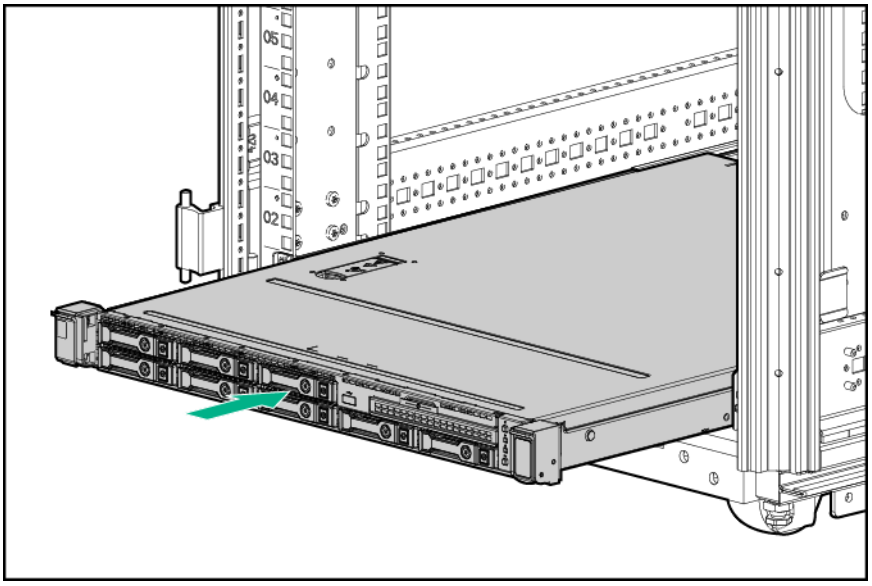

6. Do one of the following:
   - In a server that uses thumbscrew rack ears, tighten the captive thumbscrews.
   - In a server that uses quick-release latch rack ears, if necessary, tighten the shipping screws.
7. Connect the peripheral cables.
8. Connect each power cord to the server.
9. Connect each power cord to the power source.

Accessing the product rear panel

Opening the cable management arm

To access the server rear panel:

1. Release the cable management arm.

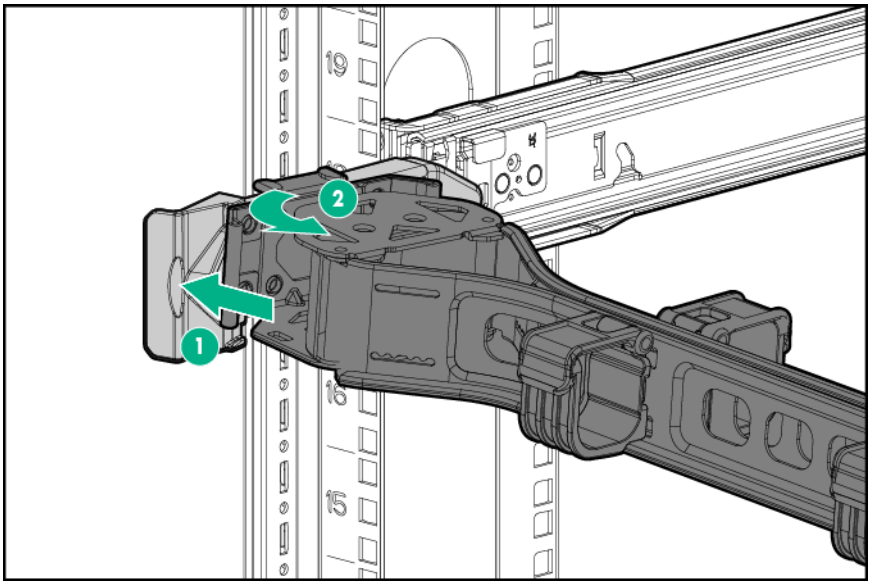

2. Open the cable management arm. The cable management arm can be right-mounted or left-mounted.

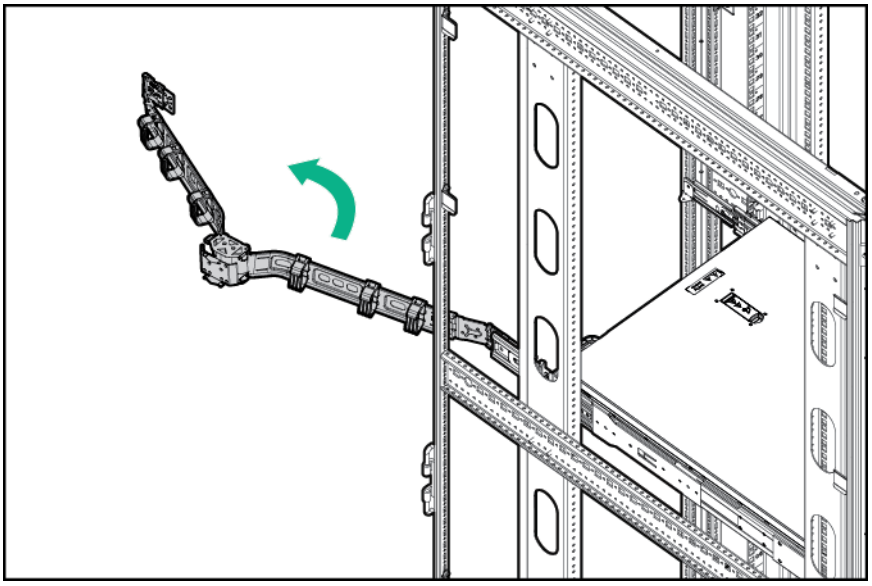

Remove the server from the rack

About this task

WARNING:
The server is heavy. To reduce the risk of personal injury or damage to the equipment:

- Observe local occupational health and safety requirements and guidelines for manual material handling.
- Get help to lift and stabilize the product during installation or removal, especially when the product is not fastened to the rails. Hewlett Packard Enterprise recommends that a minimum of two people are required for all rack server installation. A third person may be required to help align the server if the server is installed higher than chest level.
- Use caution when installing the server in or removing the server from the rack; it is unstable when not fastened to the rails.

Procedure

1. **Power down the server**.
2. Extend the server on the rack rails until the server rail-release latches engage.
3. Disconnect all peripheral cables from the server.
4. Disconnect each power cord from the server.
5. Remove the server from the rack.

   For instructions on how to extend or remove the server from the rack, see the documentation that ships with the rack rail system.
6. Place the server on a sturdy, level surface.

Remove the PCI riser cage

WARNING:
To reduce the risk of personal injury from hot surfaces, allow the drives and the internal system components to cool before touching them.

CAUTION:
To prevent damage to the server or expansion boards, power down the server, and disconnect all power cords before removing or installing the PCI riser cage.

1. **Power down the server**.
2. Remove all power:
   a. Disconnect each power cord from the power source.
   b. Disconnect each power cord from the server.
3. Do one of the following:
   - **Extend the server from the rack**.
   - **Remove the server from the rack**.
4. **Remove the access panel**.
5. Disconnect all cables connected to existing expansion boards.
6. Lift the PCI riser cage to unseat the PCI riser board.
   - Primary PCI riser cage

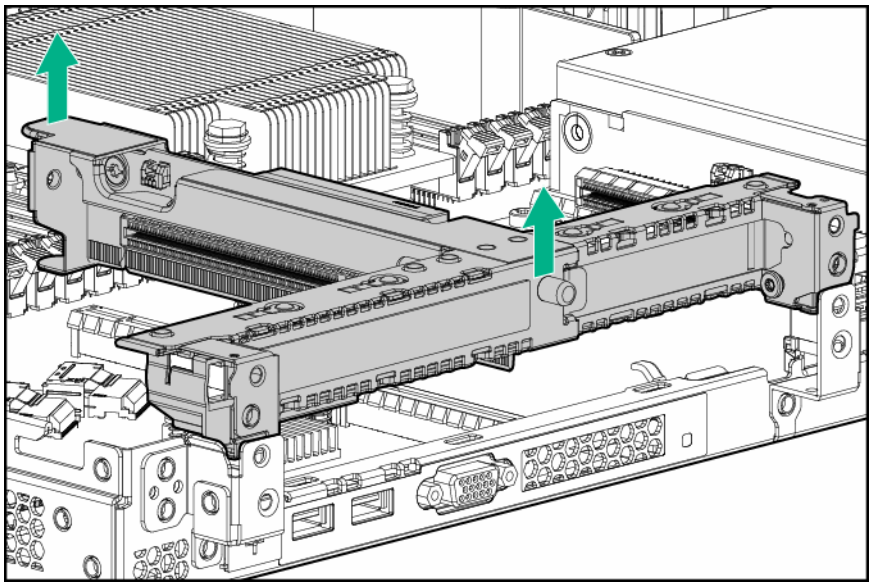

   - Secondary PCI riser cage

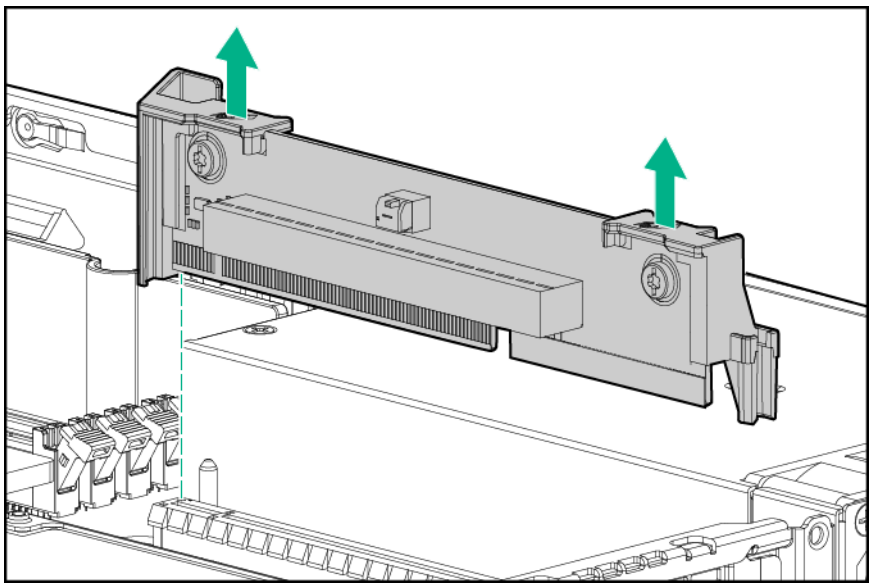

Non-hot-plug drive carrier

CAUTION:
To prevent improper cooling and thermal damage, do not operate the server unless all bays are populated with either a component or a blank.

1. **Power down the server**.
2. Remove all power:
   a. Disconnect each power cord from the power source.
   b. Disconnect each power cord from the server.
3. If installed, **remove the security bezel**.
4. Remove the drive carrier.

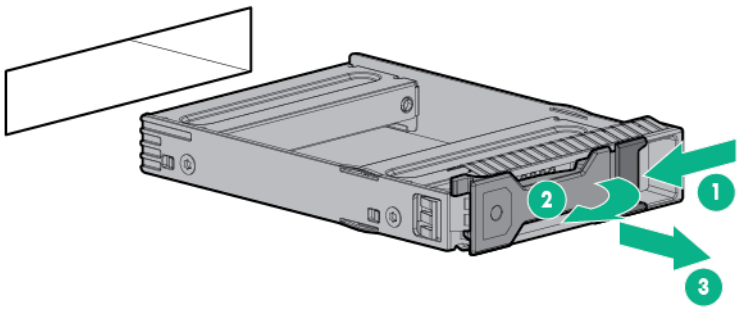

To replace the component, slide the component into the bay until it clicks.

Non-hot-plug drive

CAUTION:
To prevent improper cooling and thermal damage, do not operate the server unless all bays are populated with either a component or a blank.

1. Back up all server data on the drive.
2. **Power down the server**.
3. Remove all power:
   a. Disconnect each power cord from the power source.
   b. Disconnect each power cord from the server.
4. If installed, **remove the security bezel**.
5. Remove the non-hot-plug drive.

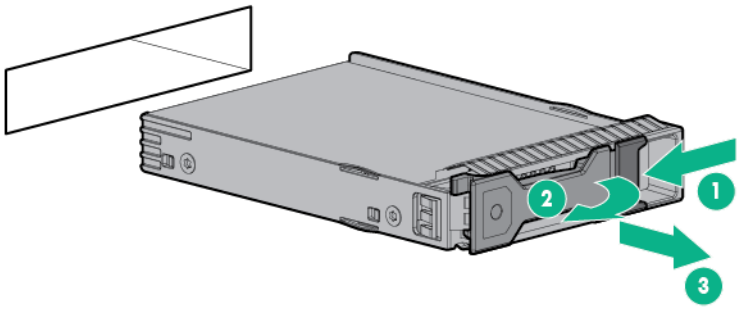

6. Remove the drive from the carrier.

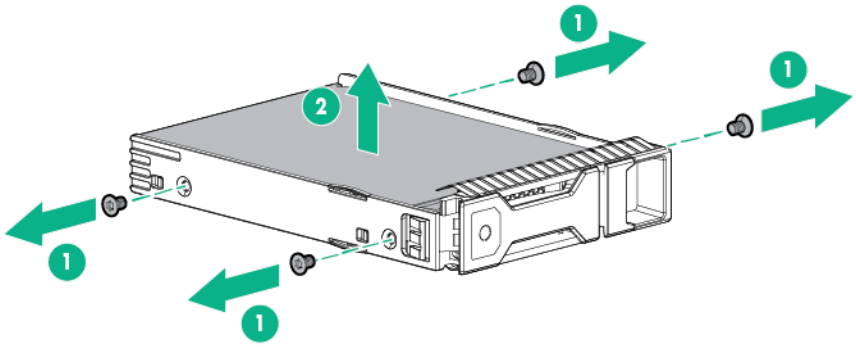

To replace the component, reverse the removal procedure.

Hot-plug drive blanks

About this task

CAUTION:
To prevent improper cooling and thermal damage, do not operate the server unless all bays are populated with either a component or a blank.

Procedure

1. If installed, **remove the security bezel**.
2. Remove the drive blank:
   - Hot-plug LFF drive blank

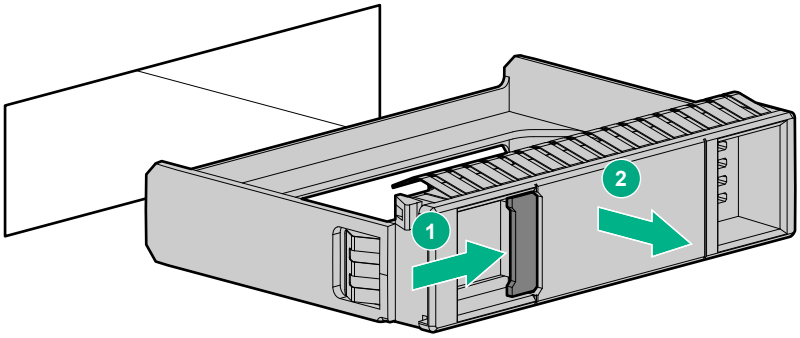

To replace the LFF drive blank, slide the component into the bay until it clicks.

- Hot-plug SFF drive blank

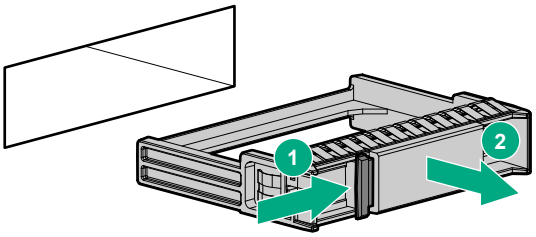

To replace the SFF drive blank, while pressing the release latch, slide the component into the bay until it is fully seated.

Hot-plug drive

CAUTION:
To prevent improper cooling and thermal damage, do not operate the server unless all bays are populated with either a component or a blank.

1. Back up all server data on the drive.
2. If installed, **remove the security bezel**.
3. Determine the status of the drive from the **drive LED definitions**.
4. Remove the hot-plug drive.

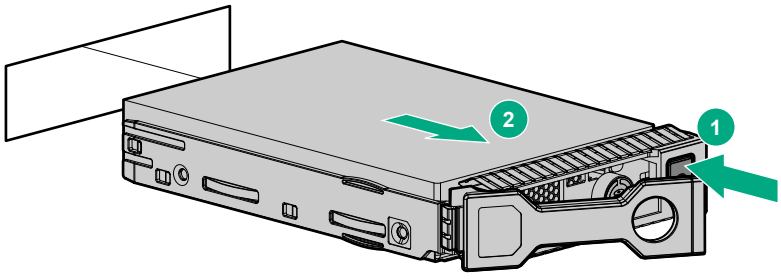

To replace the component, reverse the removal procedure.

Access panel

About this task

WARNING:
To reduce the risk of personal injury from hot surfaces, allow the drives and the internal system components to cool before touching them.

CAUTION:
To prevent damage to the server or expansion boards, power down the server. and disconnect all power cords before removing or installing the PCI riser cage.

Procedure

1. **Power down the server**.
2. Remove all power:
   a. Disconnect each power cord from the power source.
   b. Disconnect each power cord from the server.
3. Do one of the following:
   - **Extend the server from the rack**.
   - **Remove the server from the rack**.
4. Open the access panel latch, slide the access panel to the rear of the chassis, and then remove the access panel.

   If the access panel latch is locked, use a T-15 Torx screwdriver to unlock the latch.

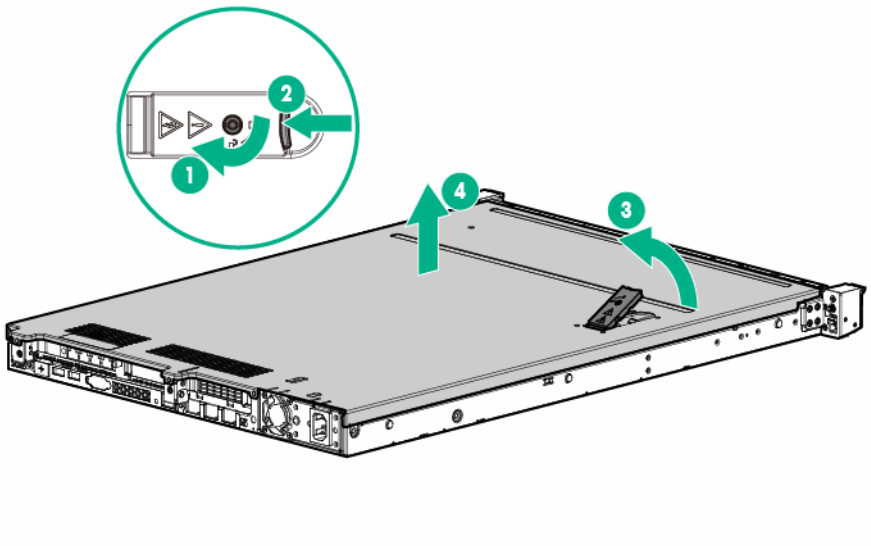

To replace the component, reverse the removal procedure.

Four-bay LFF non-hot-plug drive backplane

1. If installed, **remove the security bezel**.
2. **Power down the server**.
3. Remove all power:

a. Disconnect each power cord from the power source.
b. Disconnect each power cord from the server.

4. Do one of the following:
   - **Extend the server from the rack**.
   - **Remove the server from the rack**.
5. **Remove the access panel**.
6. Remove the front I/O cable from the cable clips.
7. **Remove the non-hot-plug drives**.
8. Disconnect all cables connected to the drive backplane.
9. Remove the non-hot-plug drive backplane.

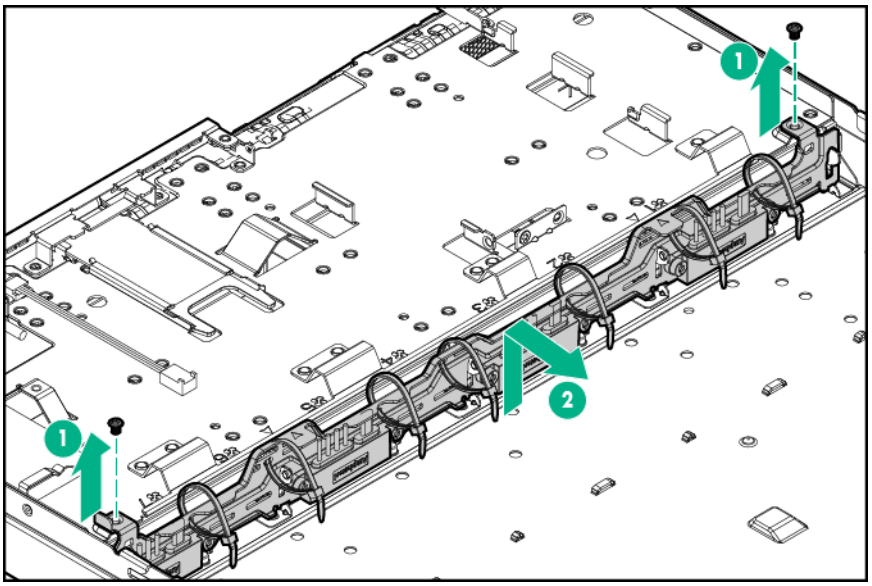

To replace the component, reverse the removal procedure.

Four-bay LFF hot-plug drive backplane

Procedure

1. If installed, **remove the security bezel**.
2. **Power down the server**.
3. Remove all power:
   a. Disconnect each power cord from the power source.
   b. Disconnect each power cord from the server.
4. Do one of the following:
   - **Extend the server from the rack**.
   - **Remove the server from the rack**.
5. **Remove the access panel**.
6. Remove the front I/O cable from the cable clips.
7. **Remove all drives**.
8. Disconnect all cables connected to the drive backplane.
9. Remove the hot-plug drive backplane.

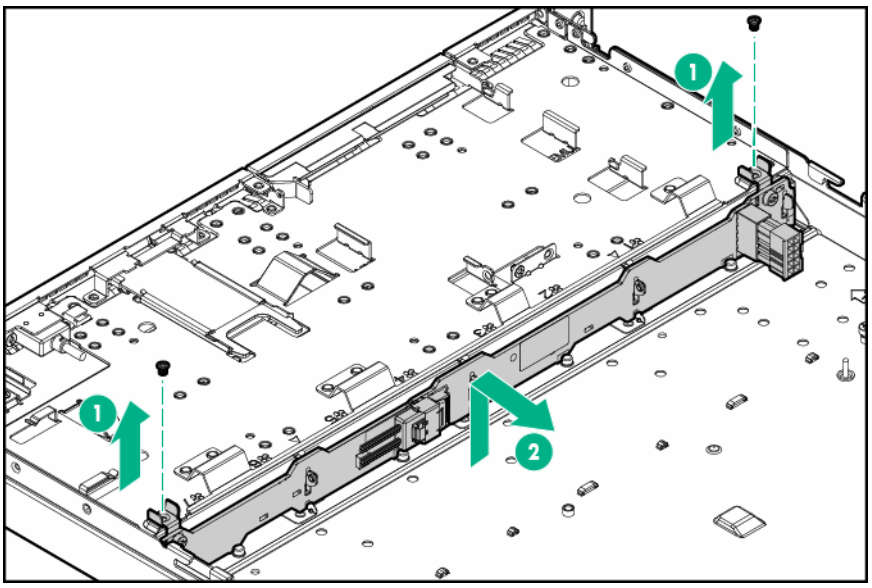

To replace the component, reverse the removal procedure.

Eight-bay SFF hot-plug drive backplane

Procedure

1. If installed, **remove the security bezel**.
2. **Power down the server**.
3. Remove all power:
   a. Disconnect each power cord from the power source.
   b. Disconnect each power cord from the server.
4. Do one of the following:
   - **Extend the server from the rack**.
   - **Remove the server from the rack**.
5. **Remove the access panel**.
6. **Remove all drives**.
7. Disconnect all cables connected to the drive backplane.
8. Remove the hot-plug drive backplane.

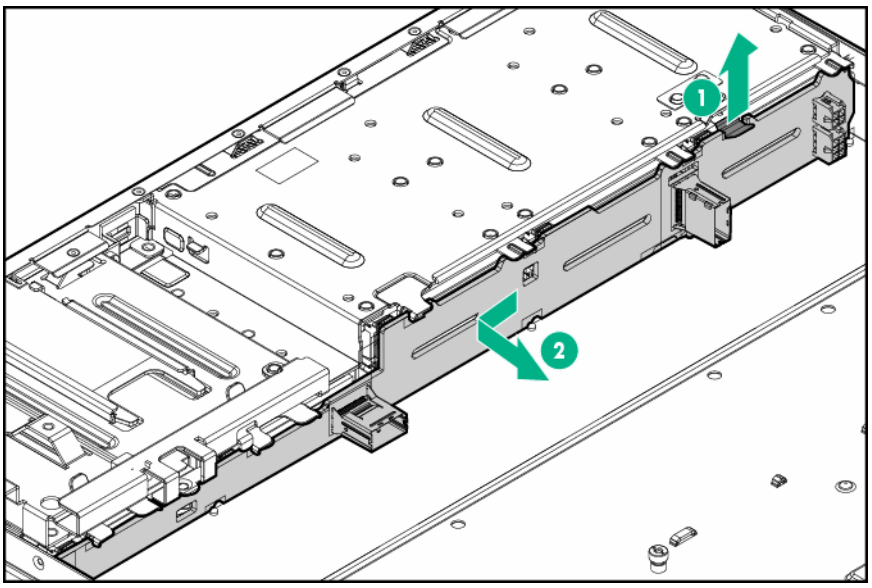

To replace the component, reverse the removal procedure.

Smart Storage Battery

About this task

For more information about product features, specifications, options, configurations, and compatibility, see the product QuickSpecs on the **Hewlett Packard Enterprise website**.

WARNING:
To reduce the risk of personal injury from hot surfaces, allow the drives and the internal system components to cool before touching them.

CAUTION:
To prevent damage to electrical components, take the appropriate anti-static precautions before beginning any installation, removal, or replacement procedure. Improper grounding can cause electrostatic discharge.

Procedure

1. **Power down the server**.
2. Remove all power:
   a. Disconnect each power cord from the power source.
   b. Disconnect each power cord from the server.
3. Do one of the following:
   - **Extend the server from the rack**.
   - **Remove the server from the rack**.
4. **Remove the access panel**.
5. Disconnect the 24-pin power supply cable from the system board.
6. Disconnect the Smart Storage Battery cable from the system board.
7. **Remove the Smart Storage Battery**.

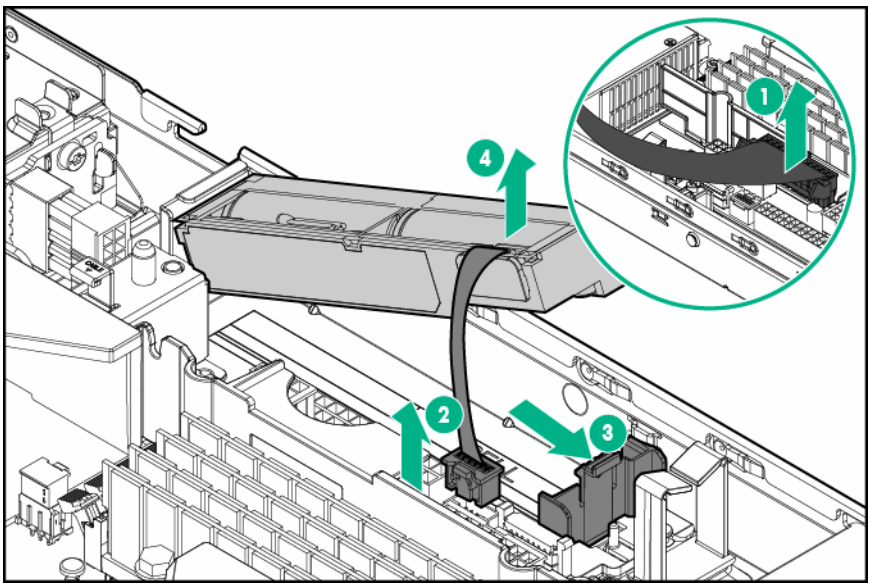

To replace the component, reverse the removal procedure.

Smart Storage Battery holder

WARNING:
To reduce the risk of personal injury from hot surfaces, allow the drives and the internal system components to cool before touching them.

CAUTION:
To prevent damage to electrical components, take the appropriate anti-static precautions before beginning any installation, removal, or replacement procedure. Improper grounding can cause electrostatic discharge.

1. **Power down the server**.
2. Remove all power:
   a. Disconnect each power cord from the power source.
   b. Disconnect each power cord from the server.
3. Do one of the following:
   - **Extend the server from the rack**.
   - **Remove the server from the rack**.
4. **Remove the access panel**.
5. **Remove the Smart Storage Battery**.
6. Remove the Smart Storage Battery holder from the chassis.

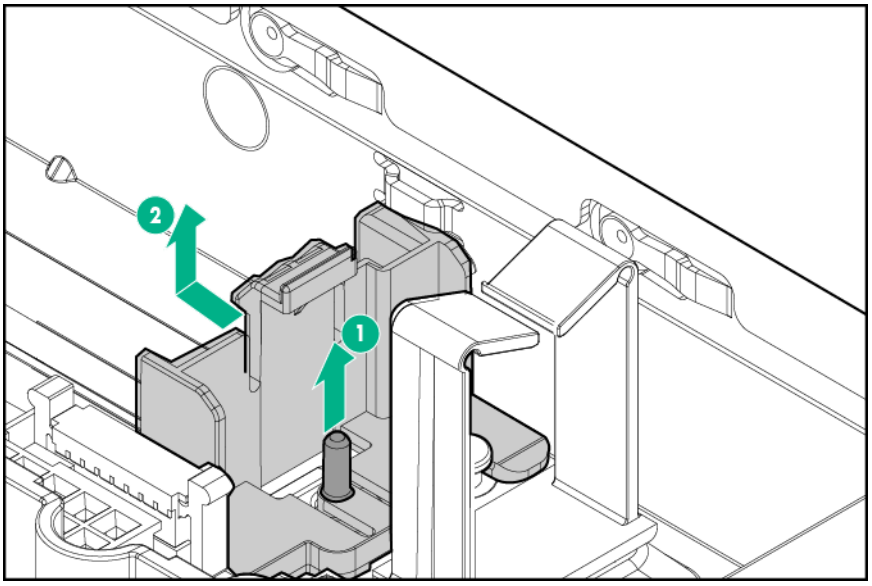

To replace the component, reverse the removal procedure.

FBWC module

WARNING:
To reduce the risk of personal injury from hot surfaces, allow the drives and the internal system components to cool before touching them.

CAUTION:
In systems that use external data storage, be sure that the server is the first unit to be powered down and the last to be powered back up. Taking this precaution ensures that the system does not erroneously mark the drives as failed when the server is powered up.

CAUTION:
To prevent damage to electrical components, take the appropriate anti-static precautions before beginning any installation, removal, or replacement procedure. Improper grounding can cause electrostatic discharge.

1. **Power down the server**.
2. Remove all power:
   a. Disconnect each power cord from the power source.
   b. Disconnect each power cord from the server.
3. Do one of the following:
   - **Extend the server from the rack**.
   - **Remove the server from the rack**.
4. **Remove the access panel**.

   CAUTION:
   When connecting or disconnecting the cache module cable, the connectors on the cache module and cable are susceptible to damage. Avoid excessive force and use caution to avoid damage to these connectors.

5. If removing a FBWC module from an expansion board in slot 2, remove the PCI riser assembly first before disconnecting the cache module cable.

For information on FBWC cabling, see **FBWC cabling**.

6. Disconnect the cache module backup power cable from the cache module.

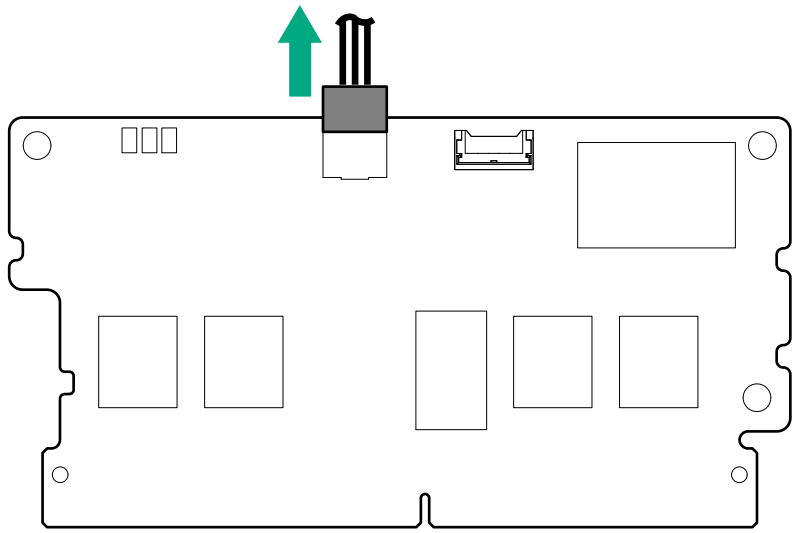

7. Remove the cache module.

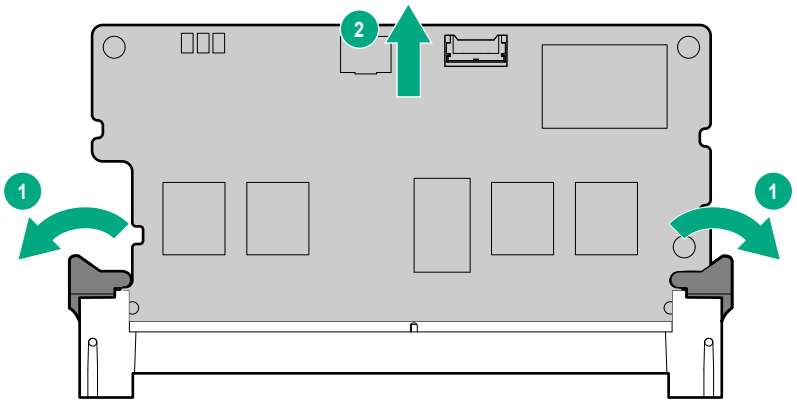

To replace the component, reverse the removal procedure.

M.2 SSD enablement kit

M.2 SSD enablement board

About this task

WARNING:
To reduce the risk of personal injury from hot surfaces, allow the drives and the internal system components to cool before touching them.

CAUTION:
To prevent damage to electrical components, take the appropriate anti-static precautions before beginning any installation, removal, or replacement procedure. Improper grounding can cause electrostatic discharge.

Procedure

1. **Power down the server**.
2. Remove all power:
   a. Disconnect each power cord from the power source.
   b. Disconnect each power cord from the server.
3. Do one of the following:
   - **Extend the server from the rack**.
   - **Remove the server from the rack**.
4. **Remove the access panel**.
5. **Remove the PCI riser cage**.
6. Disconnect the SATA cables from the M.2 SSD enablement board.
7. Remove the M.2 SSD enablement board.
   - Slot 3

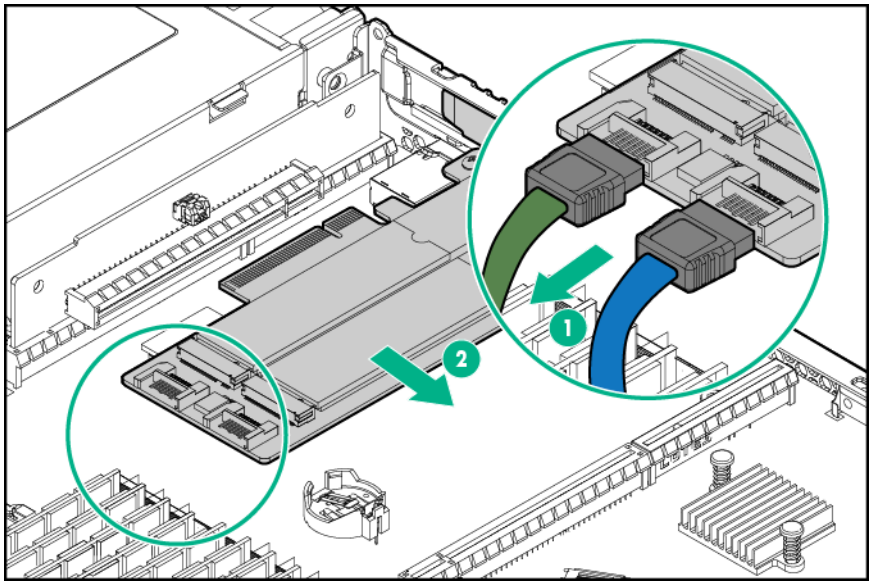

   - Slot 2

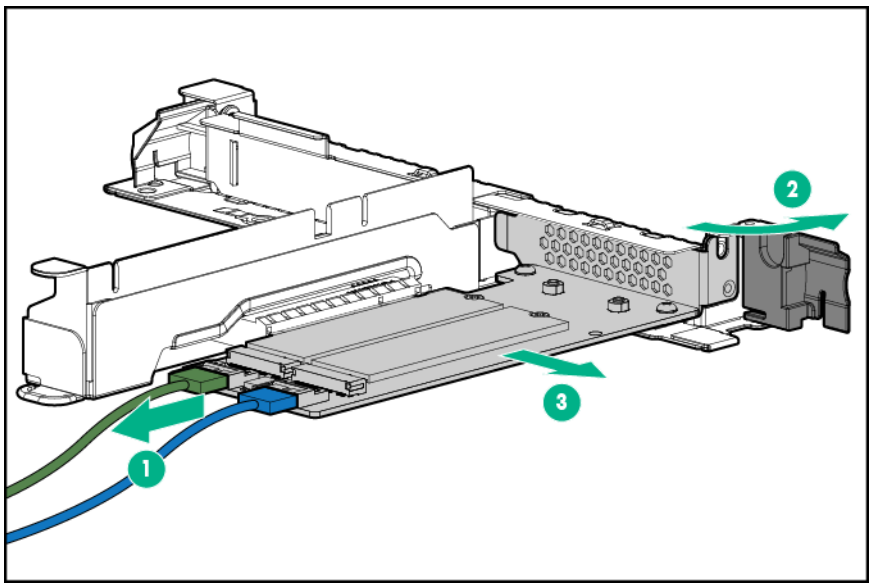

- Slot 1

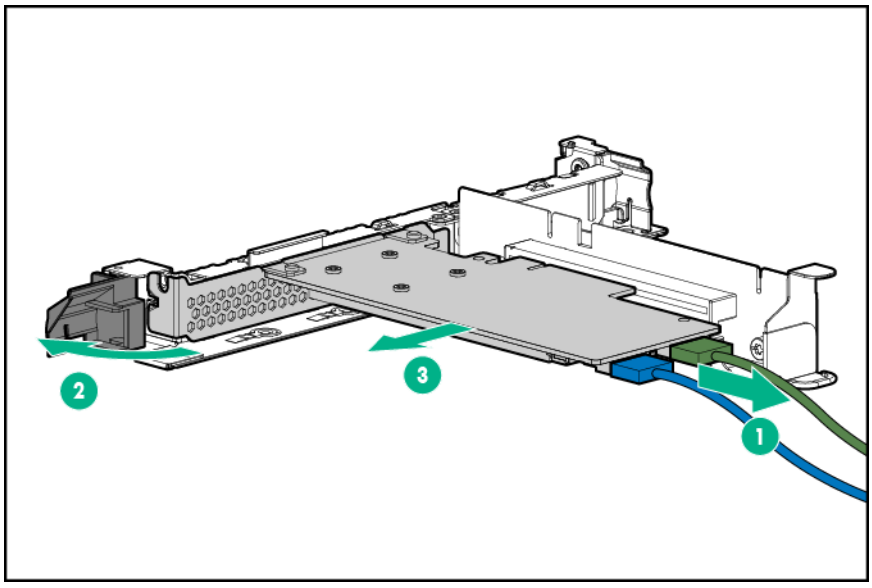

To replace the component, reverse the removal procedure.

M.2 SSD module

About this task

WARNING:
To reduce the risk of personal injury from hot surfaces, allow the drives, power input modules, and the internal system components to cool before touching them.

CAUTION:
To prevent damage to electrical components, take the appropriate anti-static precautions before beginning any installation, removal, or replacement procedure. Improper grounding can cause electrostatic discharge.

Procedure

1. **Power down the server**.
2. Remove all power:
   a. Disconnect each power cord from the power source.
   b. Disconnect each power cord from the server.
3. Do one of the following:
   - **Extend the server from the rack**.
   - **Remove the server from the rack**.
4. **Remove the access panel**.
5. If installed, **remove any expansion board that blocks access to the SSD module**.
6. Remove the SSD module.

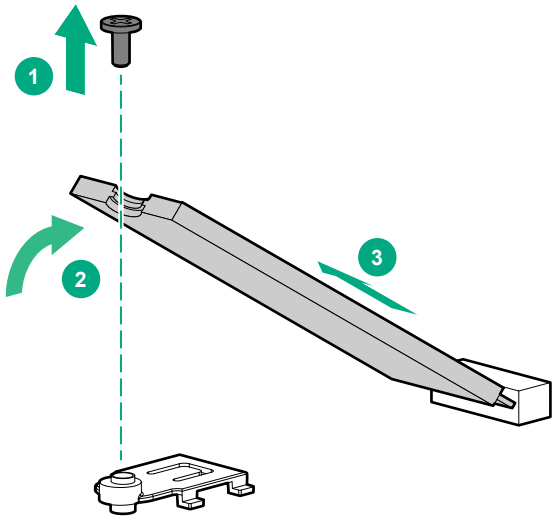

To replace the component, reverse the removal procedure.

Optical drive

About this task

WARNING:
To reduce the risk of personal injury from hot surfaces, allow the drives, power input modules, and the internal system components to cool before touching them.

CAUTION:
To prevent damage to electrical components, take the appropriate anti-static precautions before beginning any installation, removal, or replacement procedure. Improper grounding can cause electrostatic discharge.

CAUTION:

To prevent improper cooling and thermal damage, do not operate the rack unless all device bays are populated with either a component or a blank.

Procedure

1. If installed, **remove the security bezel**.
2. **Power down the server**.
3. Remove all power:
   a. Disconnect each power cord from the power source.
   b. Disconnect each power cord from the server.
4. Do one of the following:
   - **Extend the server from the rack**.
   - **Remove the server from the rack**.
5. **Remove the access panel**.
6. Disconnect the optical drive cable from the drive.

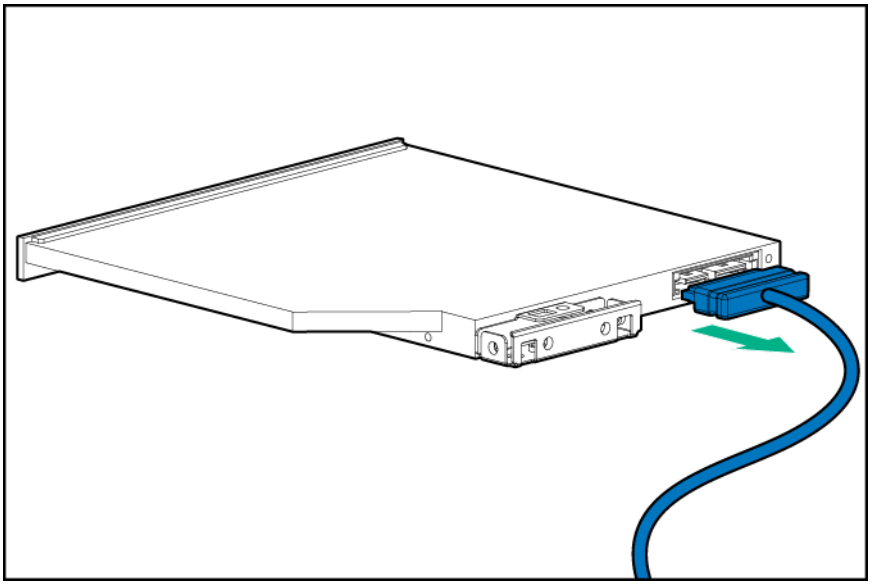

7. Remove the optical drive:
   - Four-bay LFF drive model

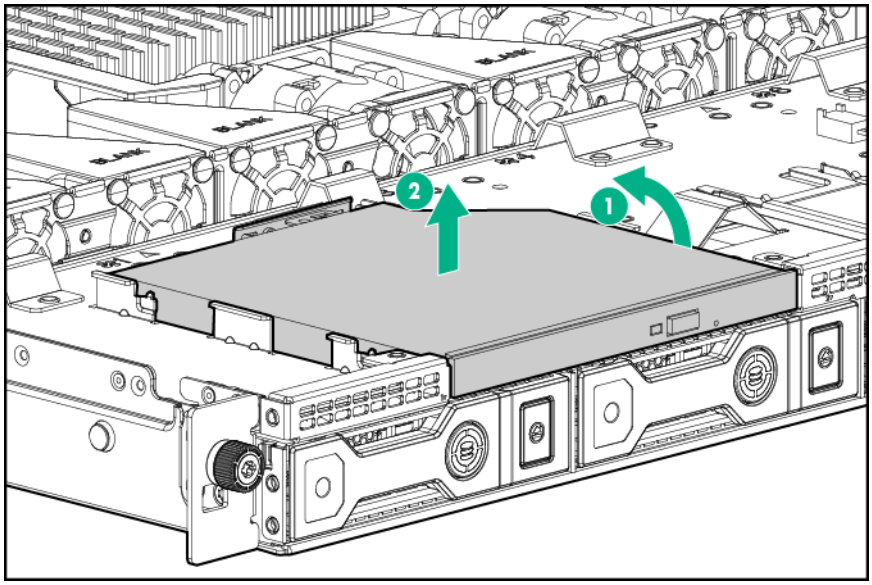

   - Eight-bay SFF drive model

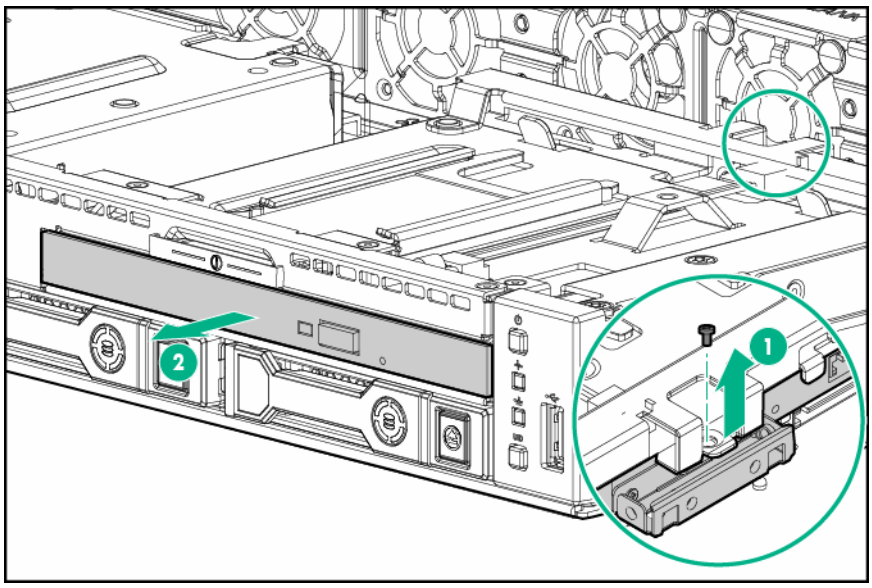

To replace the component, reverse the removal procedure.

Fan and fan blank

Fan population guidelines

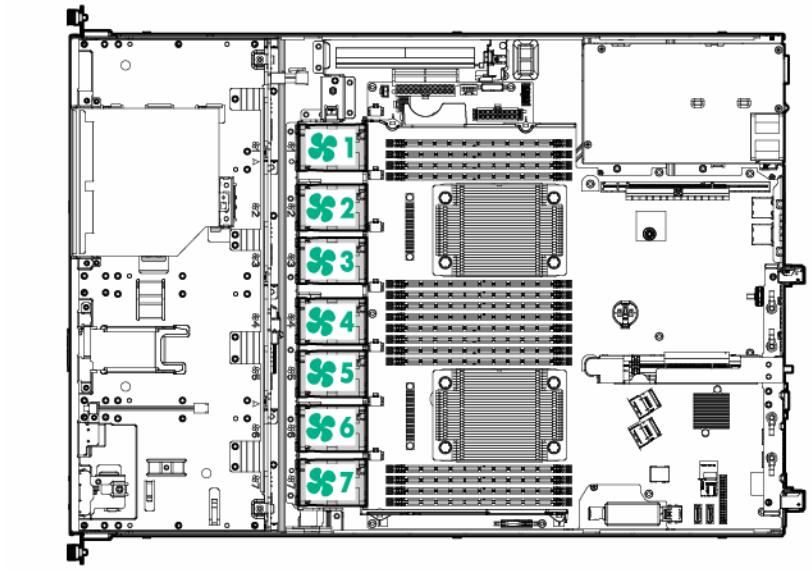

Configuration	Fan bay 1	Fan bay 2	Fan bay 3	Fan bay 4	Fan bay 5	Fan bay 6	Fan bay 7
One processor, non-redundant	Blank	Blank	Blank	Fan	Blank	Fan	Fan
One processor, redundant	Blank	Blank	Blank	Fan	Fan	Fan	Fan

Table Continued

Configuration	Fan bay 1	Fan bay 2	Fan bay 3	Fan bay 4	Fan bay 5	Fan bay 6	Fan bay 7
Two processors, non-redundant	Fan	Fan	Fan	Blank	Fan	Fan	Fan
Two processors, redundant	Fan	Fan	Fan	Fan	Fan	Fan	Fan

- In a single-processor, nonredundant configuration, fans 4, 6, and 7 cool the server. To enable the redundant fan mode, install a new fan in the fan bay 5.
- In a dual-processor, nonredundant configuration, fans 1, 2, 3, 5, 6, and 7 cool the server. To enable the redundant fan mode, install a new fan in the fan bay 4.
- In the redundant fan mode:
  - If one fan rotor fails, the system continues to operate without redundancy. This condition is indicated by a flashing amber Health LED.
  - If two fan rotors fail, the system shuts down.
- The minimum fan requirement to make this server bootable is three fans for a single processor and six fans for a dual processor configuration.

Fan blank

About this task

WARNING:
To reduce the risk of personal injury from hot surfaces, allow the drives and the internal system components to cool before touching them.

CAUTION:
To prevent damage to electrical components, take the appropriate anti-static precautions before beginning any installation, removal, or replacement procedure. Improper grounding can cause electrostatic discharge.

CAUTION:

To prevent improper cooling and thermal damage, do not operate the rack unless all device bays are populated with either a component or a blank.

Procedure

1. Press the Power On/Standby button.
2. The server powers down and enters standby mode. The system power LED changes from green to amber. Power is still applied to the server.
3. Remove all power:
   a. Disconnect each power cord from the power source.
   b. Disconnect each power cord from the server.
4. Disconnect all peripheral cables and power cords from the rear panel.
5. Do one of the following:
   - **Extend the server from the rack**.
   - **Remove the server from the rack**.
6. **Remove the access panel**.
7. Remove the fan blank.

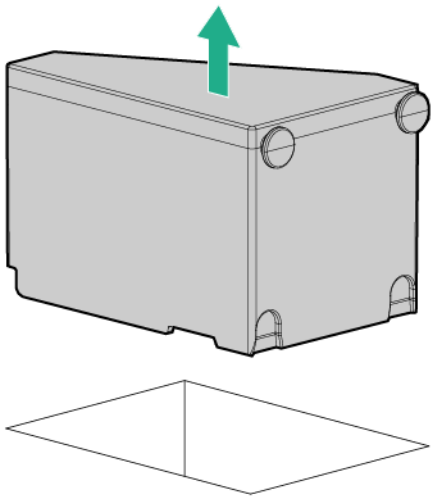

CAUTION:
To prevent improper cooling and thermal damage, do not operate the server unless all bays are populated with either a component or a blank.

To replace the component, reverse the removal procedure.

Hot-swap fan

About this task

WARNING:
To reduce the risk of personal injury from hot surfaces, allow the drives and the internal system components to cool before touching them.

CAUTION:
To prevent damage to electrical components, take the appropriate anti-static precautions before beginning any installation, removal, or replacement procedure. Improper grounding can cause electrostatic discharge.

CAUTION:

To prevent improper cooling and thermal damage, do not operate the rack unless all device bays are populated with either a component or a blank.

Procedure

1. **Power down the server**.
2. Remove all power:
   a. Disconnect each power cord from the power source.
   b. Disconnect each power cord from the server.
3. Do one of the following:

- **Extend the server from the rack**.
- **Remove the server from the rack**.

4. **Remove the access panel**.
5. Disconnect the fan cable from the system board and remove the fan.

CAUTION:
The fan does not have a fan guard. Special attention is needed when removing or installing the fan to prevent finger injury.

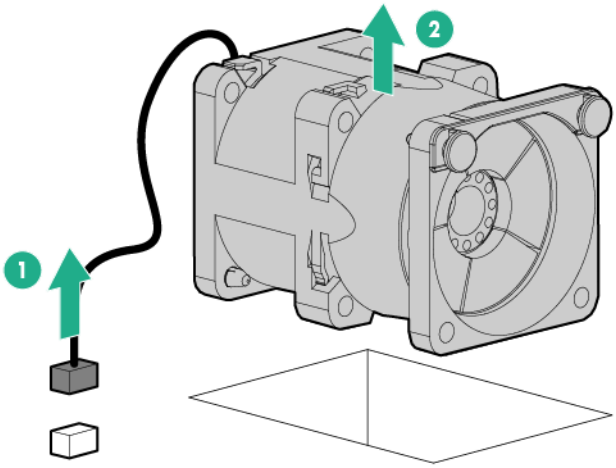

To replace the component, reverse the removal procedure.

DIMMs

Memory-processor information

- Intel Xeon E5-2600 v3 processors are optimized for:
  - Single-rank and dual-rank PC4-2133 (DDR4-2133) RDIMMs operating at up to 2133 MT/s
  - Dual-rank and quad-rank PC4-2133 (DDR4-2133) LRDIMMs operating at up to 2133 MT/s
- Intel Xeon E5-2600 v4 processors are optimized for:
  - Single-rank and dual-rank PC4-2400T (DDR4-2400) RDIMMs operating at up to 2400 MT/s
  - Dual-rank and quad-rank PC4-2400T (DDR4-2400) LRDIMMs operating at up to 2400 MT/s

For the latest memory configuration information, see the product QuickSpecs on the **Hewlett Packard Enterprise website**.

Removing a DIMM

About this task

WARNING:
To reduce the risk of personal injury from hot surfaces, allow the drives, power input modules, and the internal system components to cool before touching them.

CAUTION:
To prevent damage to electrical components, take the appropriate anti-static precautions before beginning any installation, removal, or replacement procedure. Improper grounding can cause electrostatic discharge.

Procedure

1. **Power down the server**.
2. Remove all power:
   a. Disconnect each power cord from the power source.
   b. Disconnect each power cord from the server.
3. Do one of the following:
   - **Extend the server from the rack**.
   - **Remove the server from the rack**.
4. **Remove the access panel**.
5. Open the DIMM slot latches.
6. Remove the DIMM.

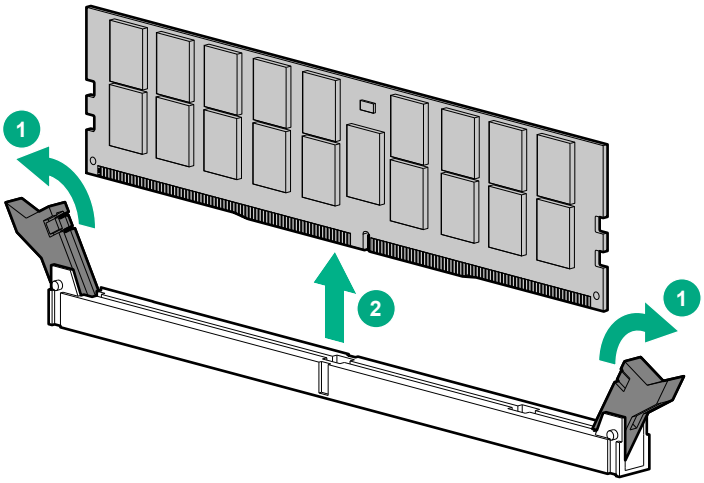

To replace the component, reverse the removal procedure.

Heatsink

Removing the heatsink

About this task

WARNING:
To reduce the risk of personal injury from hot surfaces, allow the drives and the internal system components to cool before touching them.

CAUTION:
To prevent damage to electrical components, take the appropriate anti-static precautions before beginning any installation, removal, or replacement procedure. Improper grounding can cause electrostatic discharge.

Procedure

1. **Power down the server**.
2. Remove all power:
   a. Disconnect each power cord from the power source.
   b. Disconnect each power cord from the server.
3. Do one of the following:
   - **Extend the server from the rack**.
   - **Remove the server from the rack**.
4. **Remove the access panel**.
5. **Remove the heatsink**.

Remove the heatsink

Procedure

1. Loosen one pair of diagonally opposite screws halfway, and then loosen the other pair of screws.
2. Completely loosen all screws in the same sequence.
3. Remove the heatsink from the processor backplate.

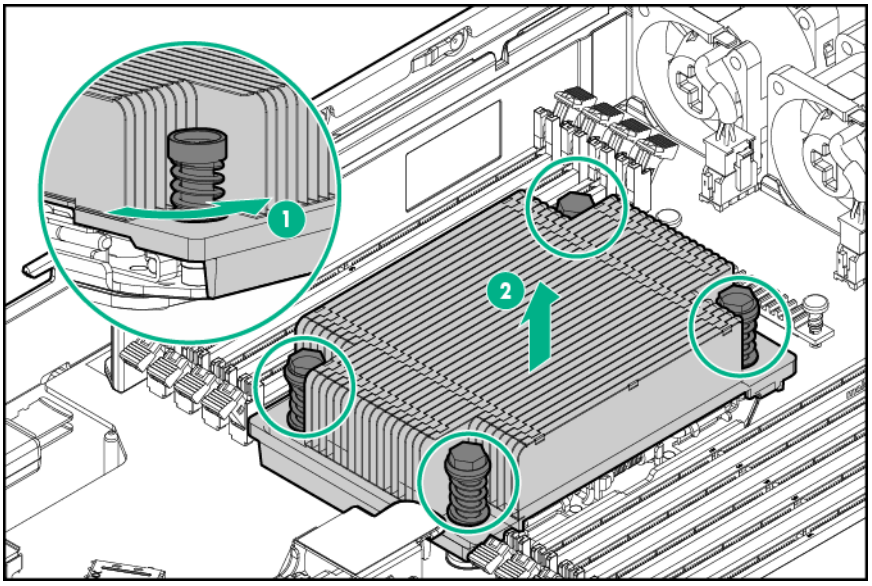

Installing the heatsink

Procedure

1. Clean the old thermal grease from the processor with the alcohol swab.

   Allow the alcohol to evaporate before continuing.
2. Remove the thermal interface protective cover from the heatsink.

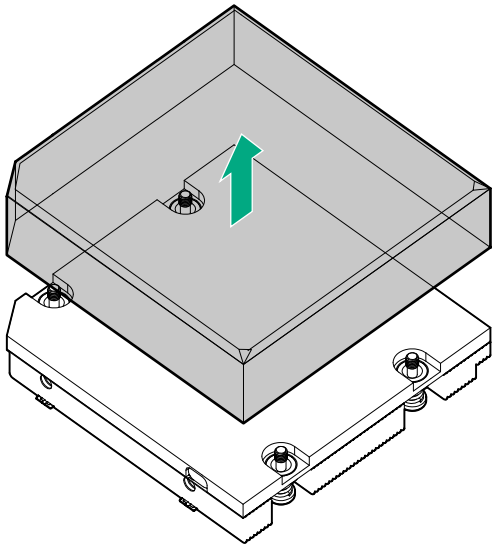

3. **Install the heatsink**.
4. Install the access panel:
   a. Place the access panel on top of the server with the access panel latch open.

      Allow the panel to extend past the rear of the server by approximately 1.25 cm (0.5 inch).
   b. Close the access panel latch.

      The access panel slides to a closed position.
   c. Use a T-15 Torx screwdriver to tighten the access panel latch screw.
5. Do one of the following:
   - Slide the server into the rack.
   - Install the server into the rack.
6. Connect each power cord to the server.
7. Connect each power cord to the power source.
8. Press the Power On/Standby button.

   The server exits standby mode and applies full power to the system. The system power LED changes from amber to green.

Install the heatsink

Procedure

1. Position the heatsink on the processor backplate.
2. Tighten one pair of diagonally opposite screws halfway, and then tighten the other pair of screws.
3. Finish the installation by completely tightening the screws in the same sequence.

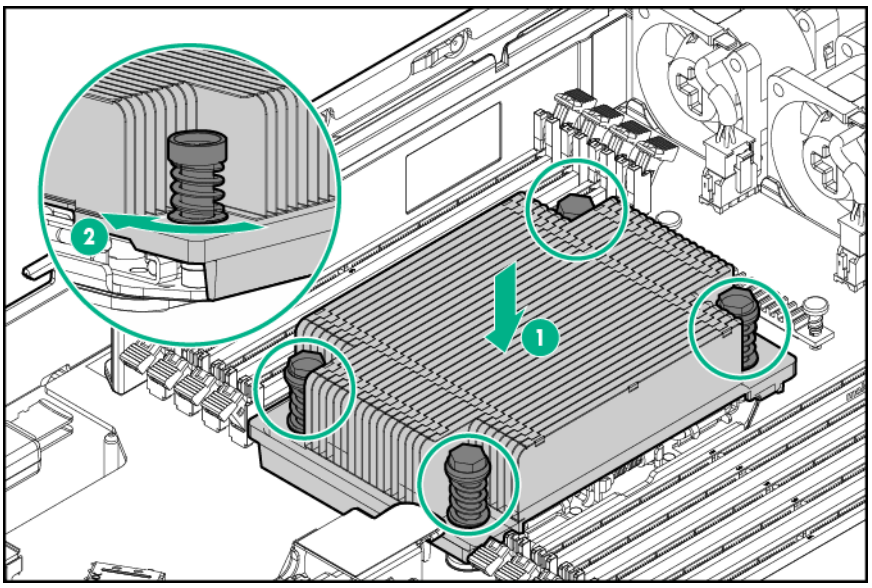

Processor

Removing a processor

About this task

The server supports single-processor and dual-processor operations.

WARNING:
To reduce the risk of personal injury from hot surfaces, allow the drives and the internal system components to cool before touching them.

CAUTION:
To avoid damage to the processor or system board, only authorized personnel should attempt to replace or install the processor in this server.

CAUTION:
To prevent possible server malfunction and damage to the equipment, multiprocessor configurations must contain processors with the same part number.

CAUTION:
To prevent possible server overheating, always populate processor socket 2 with a processor and a heatsink or a processor socket cover and a heatsink blank.

CAUTION:
To prevent damage to electrical components, take the appropriate anti-static precautions before beginning any installation, removal, or replacement procedure. Improper grounding can cause electrostatic discharge.

IMPORTANT:
If installing a processor with a faster speed, update the system ROM before installing the processor.

IMPORTANT:
Processor socket 1 must be populated at all times or the server does not function.

In a multiprocessor configuration, to optimize system performance, Hewlett Packard Enterprise recommends balancing the total capacity of the DIMMs across the processors.

Procedure

1. **Power down the server**.
2. Remove all power:
   a. Disconnect each power cord from the power source.
   b. Disconnect each power cord from the server.
3. Do one of the following:
   - **Extend the server from the rack**.
   - **Remove the server from the rack**.
4. **Remove the access panel**.
5. **Remove the heatsink**.
6. Open each of the processor locking levers in the order indicated, and then open the processor retaining bracket.

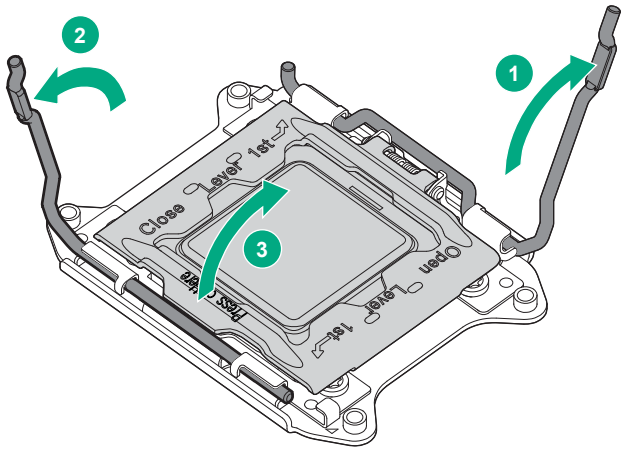

CAUTION:
THE PINS ON THE SYSTEM BOARD ARE VERY FRAGILE AND EASILY DAMAGED. To avoid damage to the system board, do not touch the processor or the processor socket contacts.

7. Remove the processor from the processor retaining bracket.

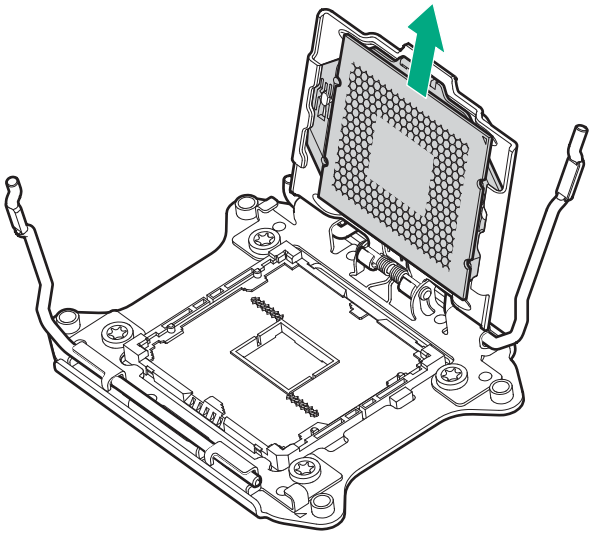

CAUTION:
THE PINS ON THE SYSTEM BOARD ARE VERY FRAGILE AND EASILY DAMAGED. To avoid damage to the system board, do not touch the processor or the processor socket contacts.

Installing a processor

Procedure

1. Install the processor.

   Verify that the processor is fully seated in the processor retaining bracket by visually inspecting the processor installation guides on either side of the processor. **THE PINS ON THE SYSTEM BOARD ARE VERY FRAGILE AND EASILY DAMAGED**

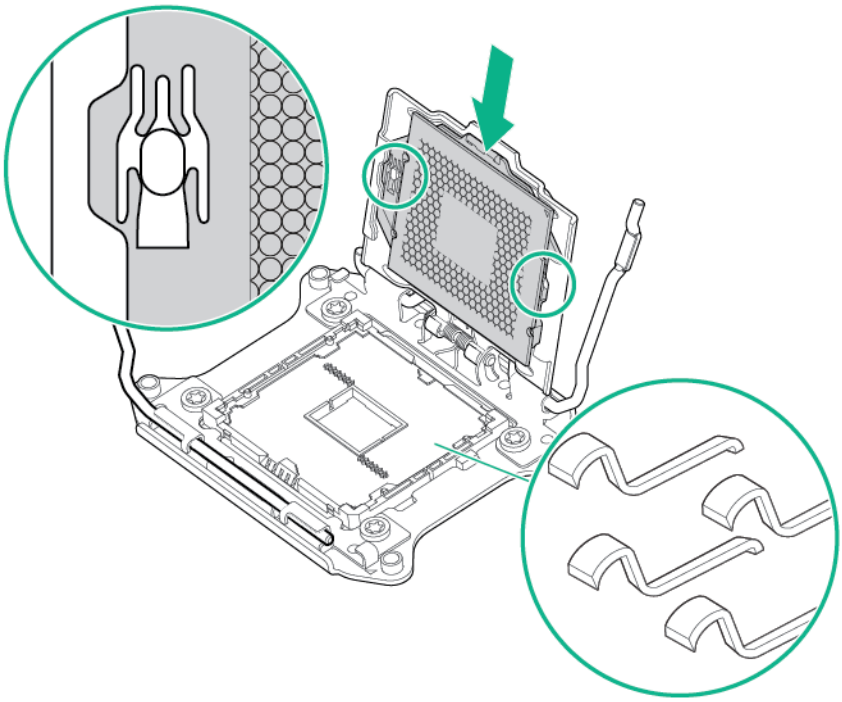

CAUTION:
THE PINS ON THE SYSTEM BOARD ARE VERY FRAGILE AND EASILY DAMAGED. To avoid damage to the system board, do not touch the processor or the processor socket contacts.

CAUTION:
Do not press down on the processor. Pressing down on the processor might damage the processor socket and the system board. Press only in the area indicated on the processor retaining bracket.

2. Close the processor retaining bracket. When the processor is installed properly inside the processor retaining bracket, the processor retaining bracket clears the flange on the front of the socket.
3. Press and hold the processor retaining bracket in place, and then close each processor locking lever. Press only in the area indicated on the processor retaining bracket.

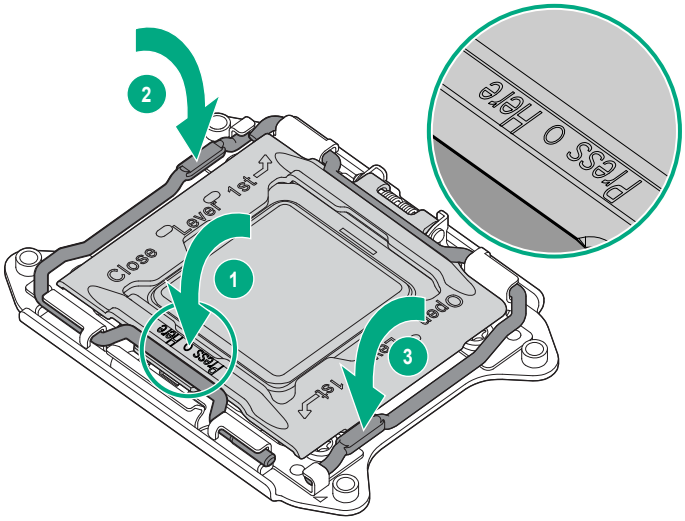

4. Clean the old thermal grease from the heatsink with the alcohol swab. Allow the alcohol to evaporate before continuing.
5. Apply all the grease to the top of the processor in the following pattern to ensure even distribution.

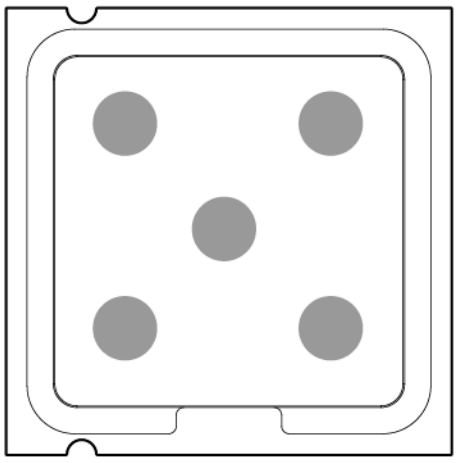

6. **Install the heatsink**.
7. Install the access panel:
   a. Place the access panel on top of the server with the access panel latch open.

Allow the panel to extend past the rear of the server by approximately 1.25 cm (0.5 inch).

b. Close the access panel latch.

The access panel slides to a closed position.

c. Use a T-15 Torx screwdriver to tighten the access panel latch screw.

8. Do one of the following:
   - Slide the server into the rack.
   - Install the server into the rack.
9. Connect each power cord to the server.
10. Connect each power cord to the power source.
11. Press the Power On/Standby button.

    The server exits standby mode and applies full power to the system. The system power LED changes from amber to green.

Expansion board

About this task

WARNING:
To reduce the risk of personal injury from hot surfaces, allow the drives, power input modules, and the internal system components to cool before touching them.

CAUTION:
To prevent damage to electrical components, take the appropriate anti-static precautions before beginning any installation, removal, or replacement procedure. Improper grounding can cause electrostatic discharge.

CAUTION:

To prevent improper cooling and thermal damage, do not operate the server blade or the enclosure unless all hard drive and device bays are populated with either a component or a blank.

Procedure

1. **Power down the server**.
2. Remove all power:
   a. Disconnect each power cord from the power source.
   b. Disconnect each power cord from the server.
3. Do one of the following:
   - **Extend the server from the rack**.
   - **Remove the server from the rack**.
4. **Remove the access panel**.
5. Disconnect all cables connected to existing expansion boards.
6. **Remove the PCI riser cage**.
7. Remove the expansion board.
   - Slot 1

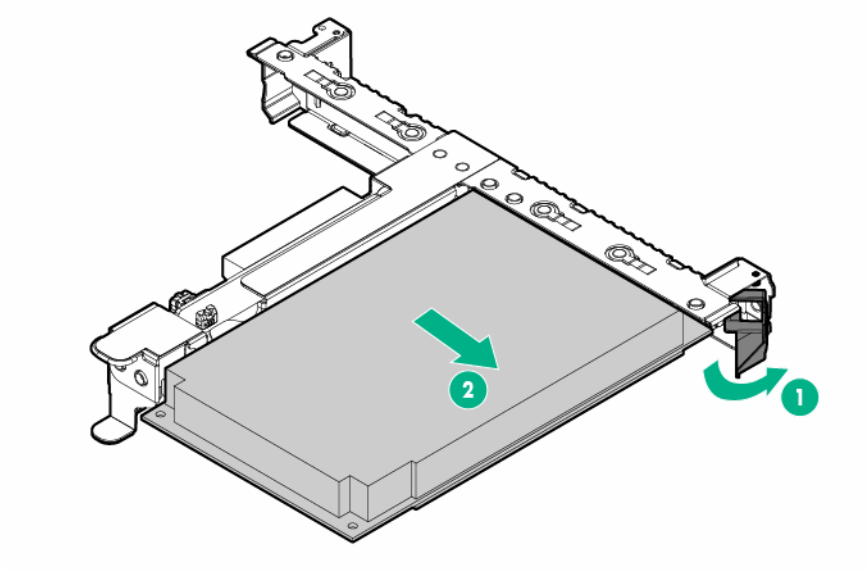

- Slot 2

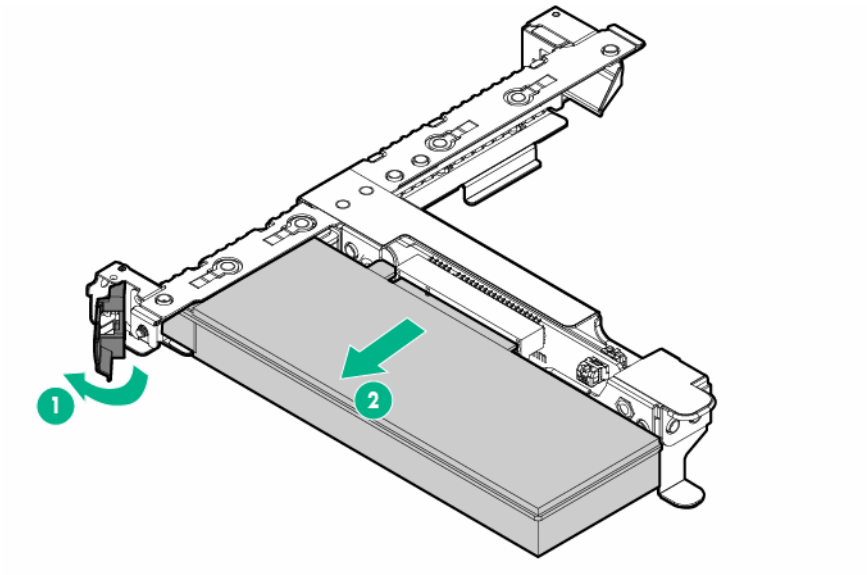

- Slot 3

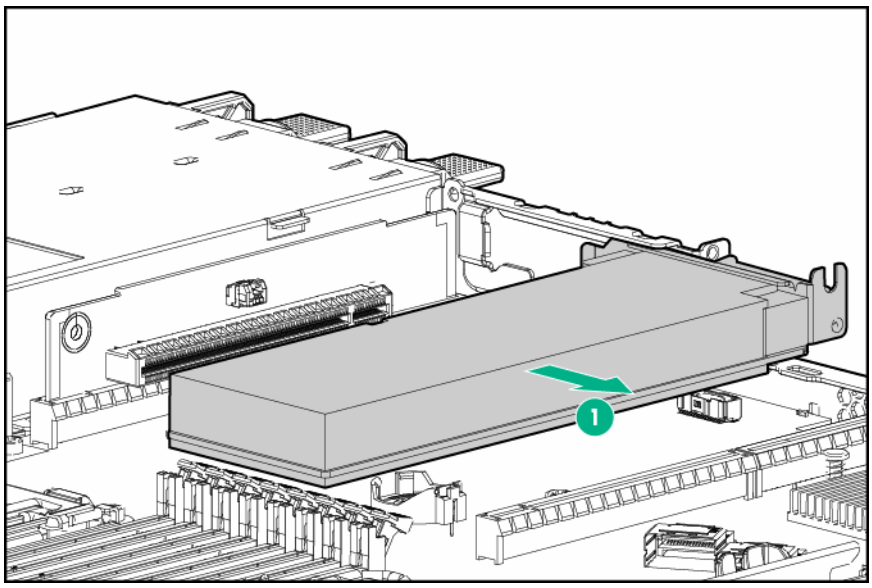

To replace the component, reverse the removal procedure.

Primary PCIe riser board

About this task

WARNING:
To reduce the risk of personal injury from hot surfaces, allow the drives, power input modules, and the internal system components to cool before touching them.

CAUTION:
To prevent damage to electrical components, take the appropriate anti-static precautions before beginning any installation, removal, or replacement procedure. Improper grounding can cause electrostatic discharge.

Procedure

1. **Power down the server**.
2. Remove all power:
   a. Disconnect each power cord from the power source.
   b. Disconnect each power cord from the server.
3. Do one of the following:
   - **Extend the server from the rack**.
   - **Remove the server from the rack**.
4. **Remove the access panel**.
5. Disconnect all cables connected to existing expansion boards.
6. **Remove the PCI riser cage**.
7. **Remove any existing expansion board from the riser board**.
8. Remove the riser board from the cage.

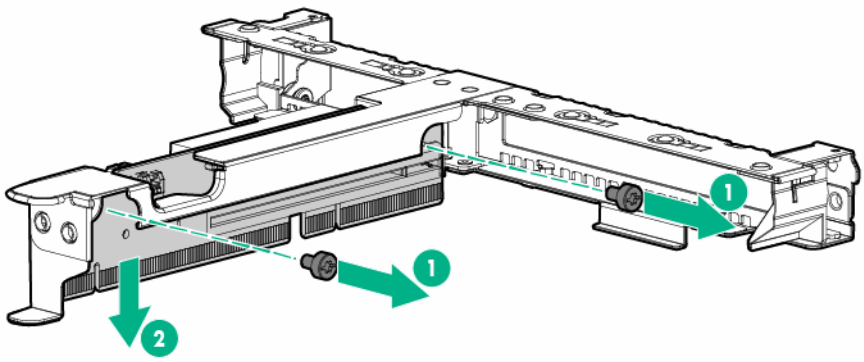

To replace the component, reverse the removal procedure.

Secondary PCIe riser assembly

CAUTION:
To prevent improper cooling and thermal damage, do not operate the server unless all PCI slots have either an expansion slot cover or an expansion board installed.

1. **Power down the server**.
2. Remove all power:
   a. Disconnect each power cord from the power source.
   b. Disconnect each power cord from the server.
3. Do one of the following:
   - **Extend the server from the rack**.
   - **Remove the server from the rack**.
4. **Remove the access panel**.
5. Disconnect all cables connected to existing expansion boards.
6. **Remove all expansion boards**.
7. Grasp the plastic ends of the riser board and lift up.

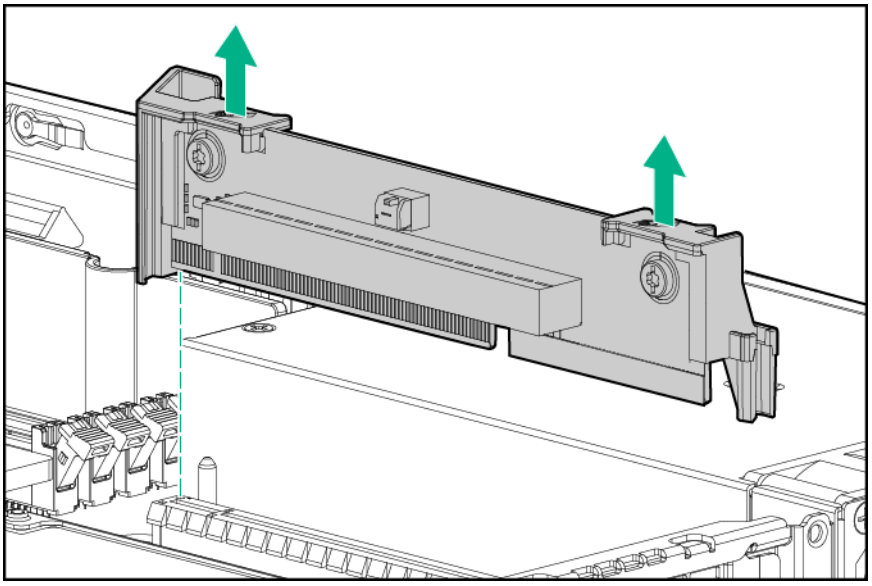

To replace the component, reverse the removal procedure.

FlexibleLOM riser board

About this task

WARNING:
To reduce the risk of personal injury from hot surfaces, allow the drives and the internal system components to cool before touching them.

CAUTION:
To prevent damage to electrical components, take the appropriate anti-static precautions before beginning any installation, removal, or replacement procedure. Improper grounding can cause electrostatic discharge.

For more information about product features, specifications, options, configurations, and compatibility, see the product QuickSpecs on the **Hewlett Packard Enterprisewebsite**.

Procedure

1. **Power down the server**.
2. Remove all power:
   a. Disconnect each power cord from the power source.
   b. Disconnect each power cord from the server.
3. Do one of the following:
   - **Extend the server from the rack**.
   - **Remove the server from the rack**
4. **Remove the access panel**.
5. Disconnect the FlexibleLOM sideband cable.

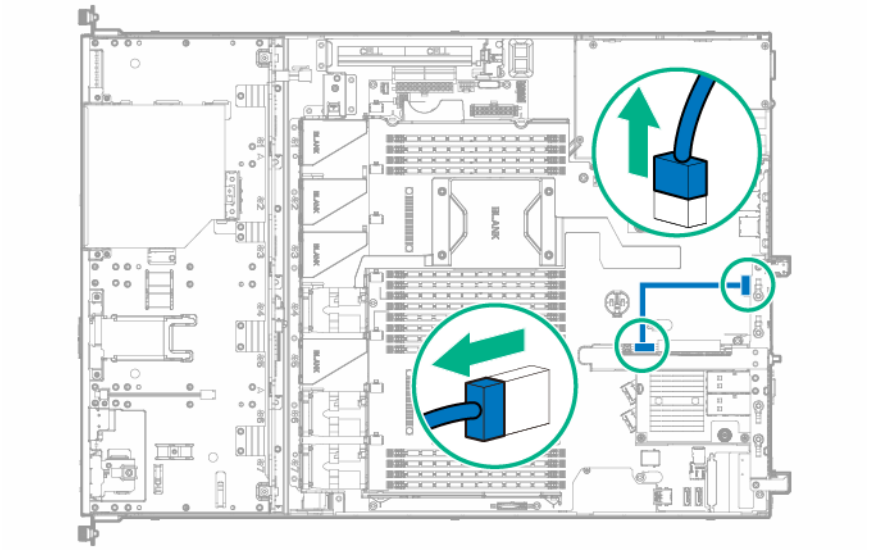

6. Remove the FlexibleLOM riser cage.

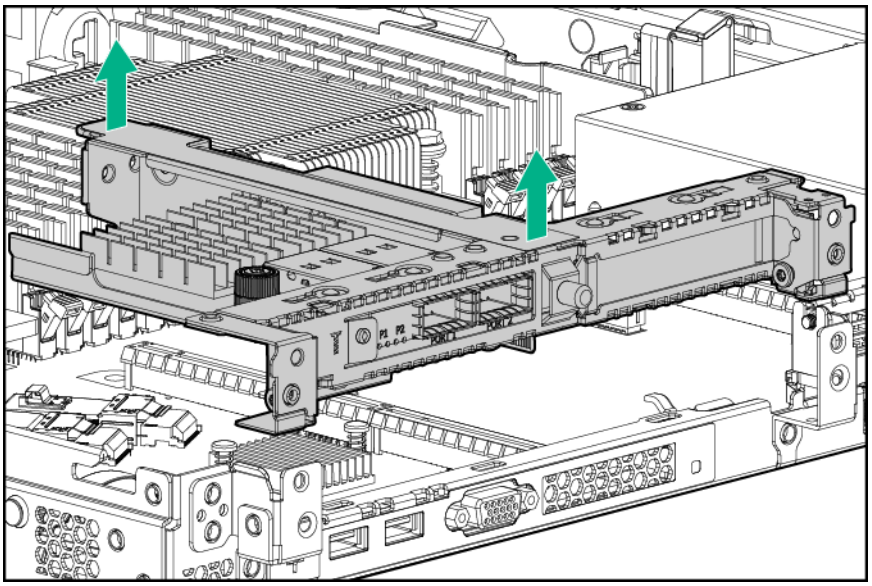

7. Remove the FLexibleLOM adapter from the riser cage.

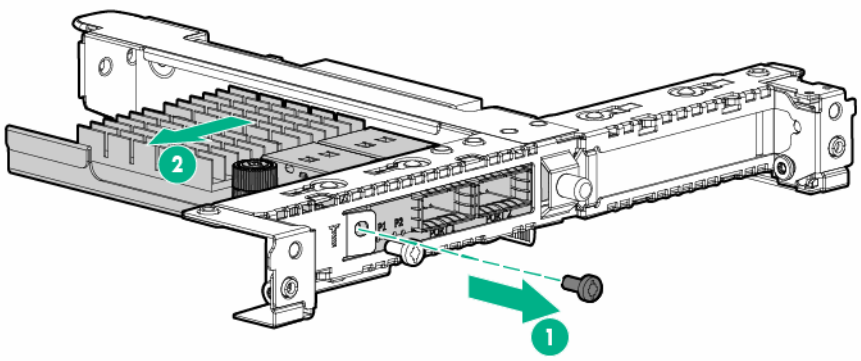

8. Remove the FlexibleLOM riser board from the riser cage.

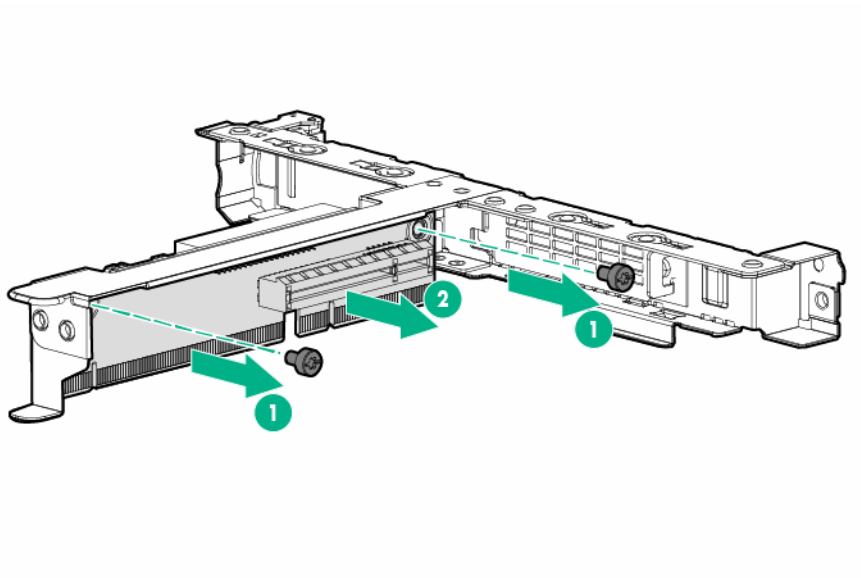

To replace the component, reverse the removal procedure.

System battery

About this task

If the server no longer automatically displays the correct date and time, then replace the battery that provides power to the real-time clock. Under normal use, battery life is 5 to 10 years.

WARNING:
The computer contains an internal lithium manganese dioxide, a vanadium pentoxide, or an alkaline battery pack. A risk of fire and burns exists if the battery pack is not properly handled. To reduce the risk of personal injury:

- Do not attempt to recharge the battery.
- Do not expose the battery to temperatures higher than 60°C (140°F).
- Do not disassemble, crush, puncture, short external contacts, or dispose of in fire or water.
- Replace only with the spare designated for this product.

Procedure

1. **Power down the server**.
2. Remove all power:
   a. Disconnect each power cord from the power source.
   b. Disconnect each power cord from the server.
3. Do one of the following:
   - **Extend the server from the rack**.
   - **Remove the server from the rack**.
4. **Remove the access panel**.
5. **Remove the PCI riser cage**.
6. **Locate the battery on the system board**.
7. Remove the battery.
   - For battery socket with a metal release tab:

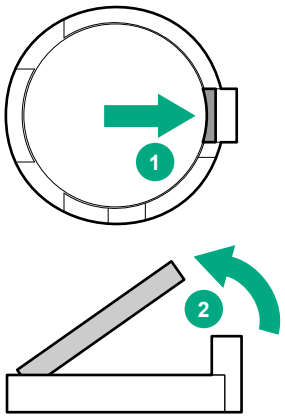

   - For battery socket that uses a plastic outer lip to secure the system battery, use a small flat-bladed, nonconductive tool to carefully remove the battery from the socket.

WARNING:
Do not exert too much force to remove the system battery. The battery could pop out of the socket, or the tool could slip and damage the socket or the system board.

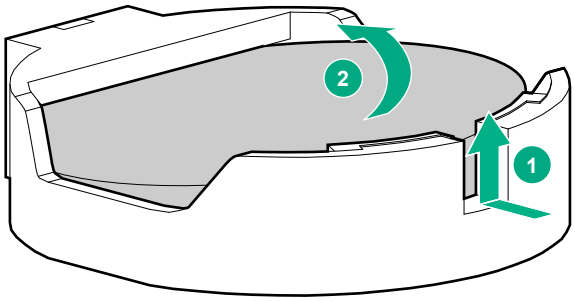

IMPORTANT:
Replacing the system board battery resets the system ROM to its default configuration. After replacing the battery, use BIOS/Platform Configuration (RBSU) in the UEFI System Utilities to reconfigure the system.

To replace the component, reverse the removal procedure.

For more information about battery replacement or proper disposal, contact an authorized reseller or an authorized service provider.

Dedicated iLO management module

About this task

WARNING:
To reduce the risk of personal injury from hot surfaces, allow the drives, power input modules, and the internal system components to cool before touching them.

CAUTION:
To prevent damage to electrical components, take the appropriate anti-static precautions before beginning any installation, removal, or replacement procedure. Improper grounding can cause electrostatic discharge.

Procedure

1. **Power down the server**.
2. Remove all power:
   a. Disconnect each power cord from the power source.
   b. Disconnect each power cord from the server.
3. Do one of the following:
   - **Extend the server from the rack**.
   - **Remove the server from the rack**.
4. **Remove the access panel**.
5. **Remove the primary PCI riser cage**.
6. Remove the dedicated iLO management module.

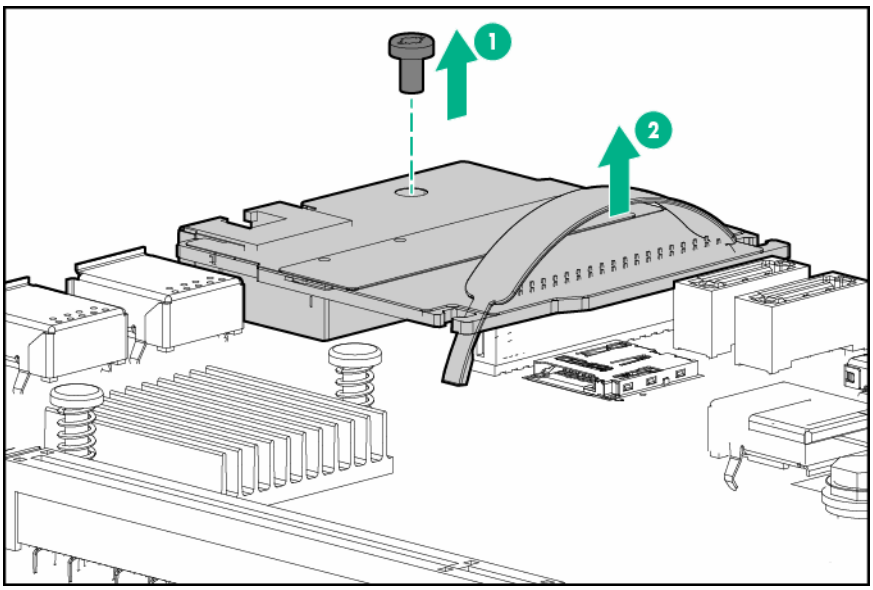

To replace the component, reverse the removal procedure. After installing the new dedicated iLO management module, **enable the dedicated iLO connector**.

Enabling the dedicated iLO management module

The onboard NIC 1/shared iLO connector is set as the default system iLO connector. To enable the dedicated iLO management module, use the iLO 4 Configuration Utility accessible within the HPE UEFI System Utilities.

For more information on the UEFI System Utilities, see the UEFI documentation on the **Hewlett Packard Enterprise website**.

IMPORTANT:
If the iLO configuration settings are reset to the default values, remote access to the machine will be lost. Access the physical machine and repeat the procedure described in this section to re-enable the dedicated iLO management connector.

To enable the dedicated iLO management module:

1. During the server startup sequence after installing the module, press **F9** in the POST screen.

   The System Utilities screen appears.
2. Select **System Configuration** | **iLO 4 Configuration Utility**.

   The iLO 4 Configuration Utility screen appears.
3. Select **Network Options**, and then press **Enter**.

   The Network Options screen appears.
4. Set the **Network Interface Adapter** field to **ON**, and then press **Enter**.
5. Press **F10** to save your changes.

   A message prompt to confirm the iLO settings reset appears.
6. Press **Enter** to reboot the iLO settings.
7. Press **Esc** until the main menu is displayed.
8. Select **Reboot the System** to exit the utility and resume the boot process.

   The IP address of the enabled dedicated iLO connector appears on the POST screen on the subsequent boot-up. Access the Network Options screen again to view this IP address for later reference.

Front I/O modules for LFF and SFF drive models

About this task

CAUTION:
To prevent damage to electrical components, take the appropriate anti-static precautions before beginning any system installation. Improper grounding can cause electrostatic discharge.

Procedure

1. **Power down the server**.
2. Remove all power:
   a. Disconnect each power cord from the power source.
   b. Disconnect each power cord from the server.
3. Do one of the following:
   - **Extend the server from the rack**.
   - **Remove the server from the rack**.
4. **Remove the access panel**.
5. To remove the front I/O module for four-bay LFF drive model:
   a. Remove the screws and disconnect the front I/O module from the front panel.
   b. Detach the ambient thermal sensor cable from its clip.

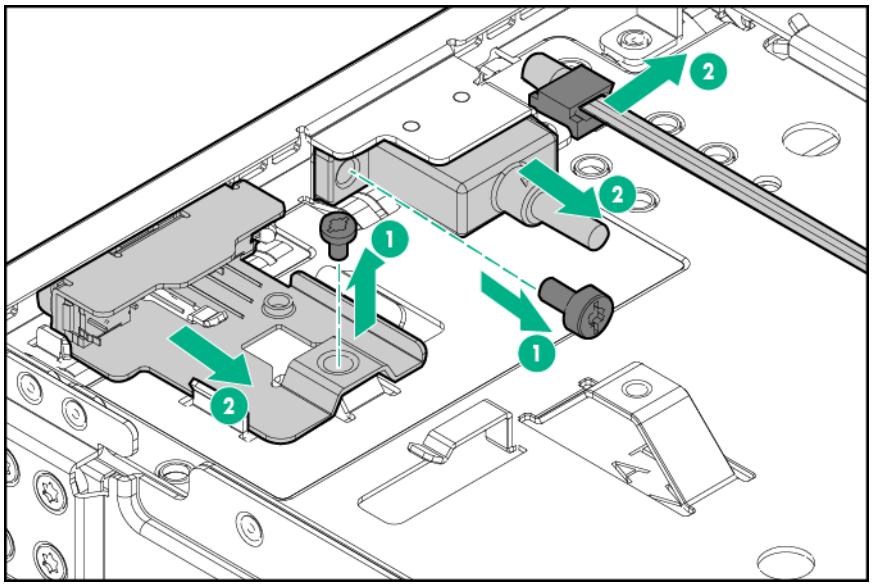

6. To remove the front I/O module for eight-bay SFF drive model:
   a. Remove the front I/O module panel.

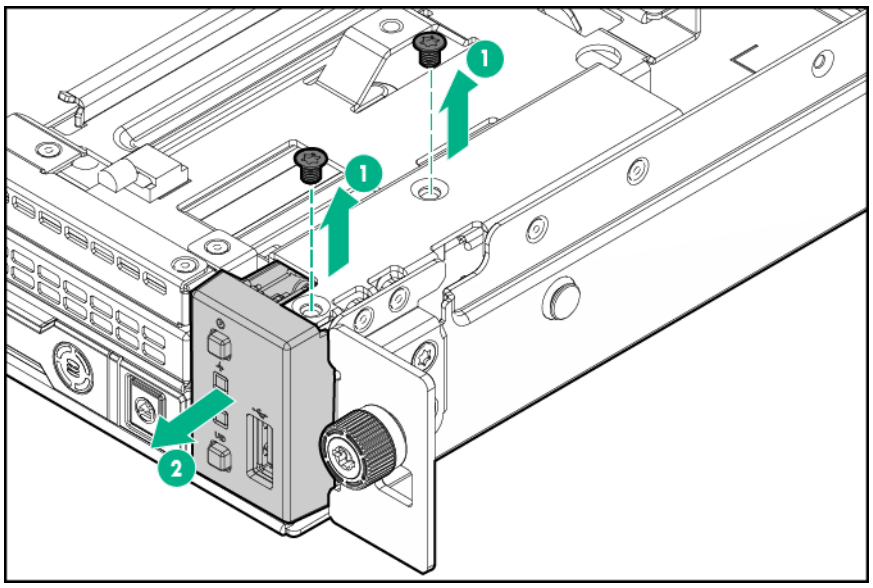

b. Disconnect the front I/O module from the system board.
c. Detach the ambient thermal sensor cable from its clip.
d. Remove the screws and disconnect the front I/O module connectors from the front panel.

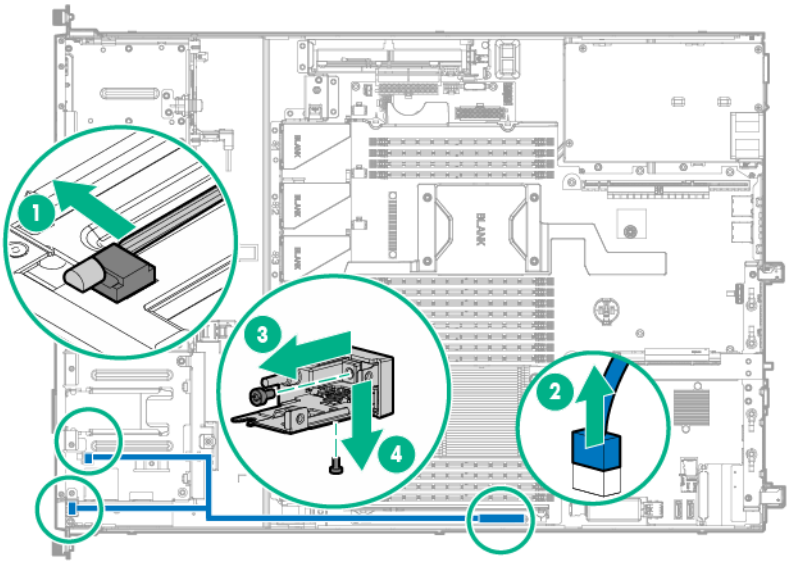

To replace the component, reverse the removal procedure.

System board

Removing the system board

About this task

WARNING:
To reduce the risk of personal injury from hot surfaces, allow the drives, power input modules, and the internal system components to cool before touching them.

CAUTION:
To prevent damage to electrical components, take the appropriate anti-static precautions before beginning any installation, removal, or replacement procedure. Improper grounding can cause electrostatic discharge.

CAUTION:
To avoid ESD damage, when removing electrostatic-sensitive components from the failed system board, place the components on a static-dissipating work surface or inside separate antistatic bags.

Procedure

1. **Power down the server**.
2. Remove all power:
   a. Disconnect each power cord from the power source.
   b. Disconnect each power cord from the server.
3. Do one of the following:
   - **Extend the server from the rack**.
   - **Remove the server from the rack**.
4. **Remove the access panel**.
5. **Remove the fans**.
6. **Remove the fan blanks**.
7. **Remove the PCI riser cage**.
8. **Remove the dedicated iLO management module**.
9. Disconnect all cables connected to the system board.
10. **Remove the Smart Storage Battery**.
11. **Remove all DIMMs**.
12. If installed, remove the heatsink blank.
13. **Remove the heatsink**.
14. Open each of the processor locking levers in the order indicated, and then open the processor retaining bracket.

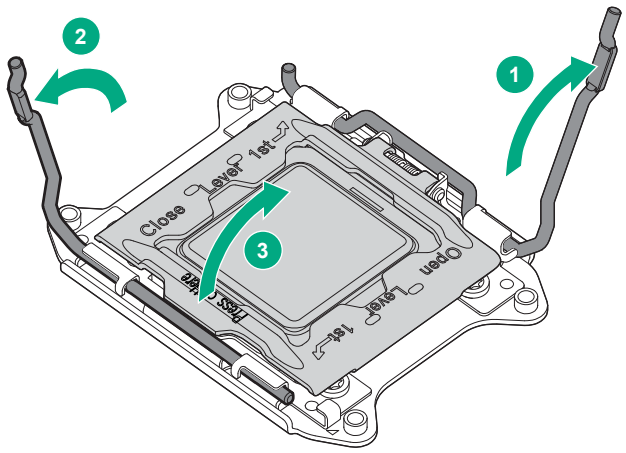

CAUTION:

THE PINS ON THE SYSTEM BOARD ARE VERY FRAGILE AND EASILY DAMAGED. To avoid damage to the system board, do not touch the processor or the processor socket contacts.

15. Remove the processor from the processor retaining bracket.

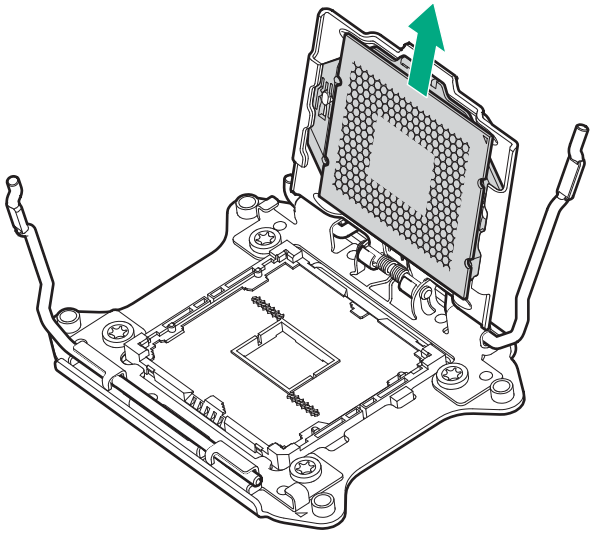

CAUTION:
When returning a damaged system board to Hewlett Packard Enterprise, always install all processor socket covers to prevent damage to the processor sockets and system board.

16. **Remove the system board**.

Remove the system board

Procedure

1. Remove the system board screws.
2. Lift the system board out of the chassis.

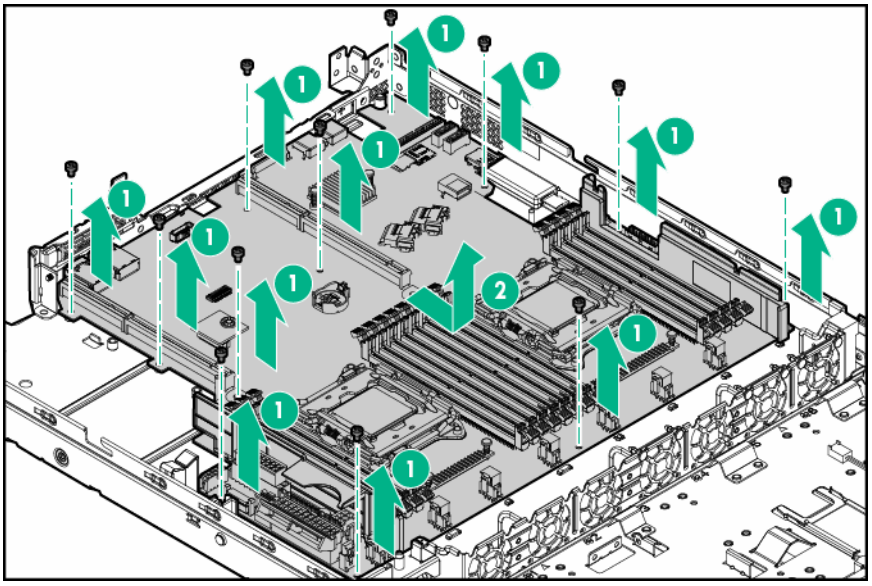

3. Remove the two DIMM guards from the system board.

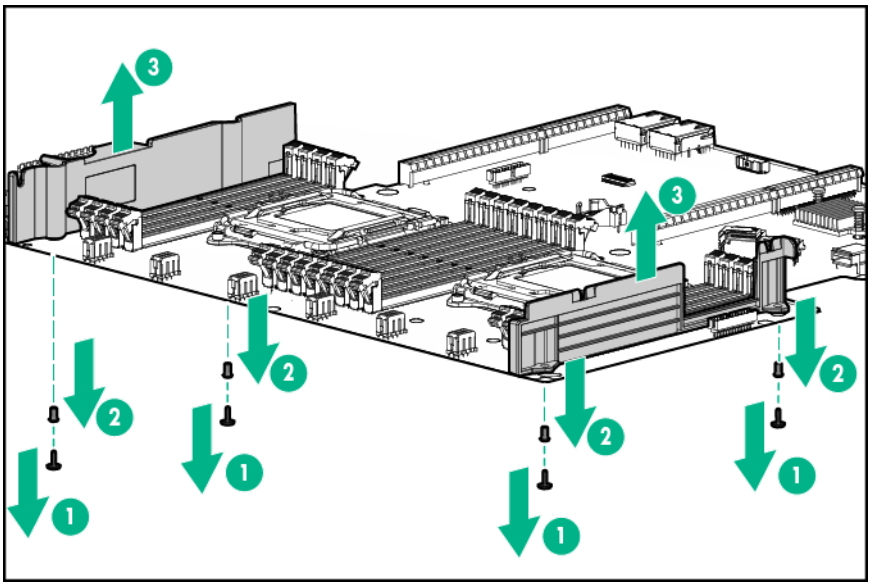

Installing the system board

Procedure

1. **Install the system board**.
2. Open each of the processor locking levers in the order indicated, and then open the processor retaining bracket.

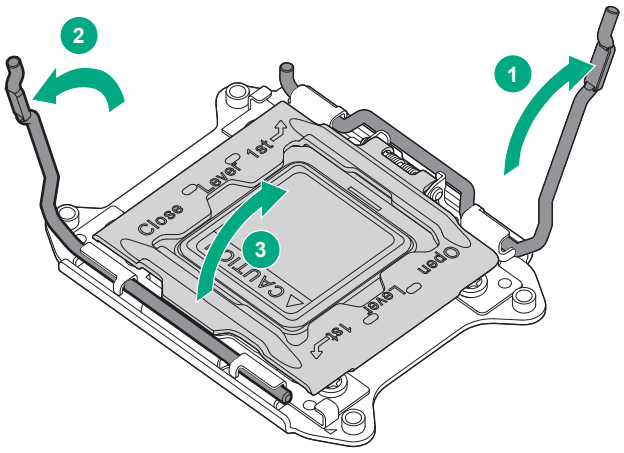

3. Remove the clear processor socket cover. Retain the processor socket cover for future use.

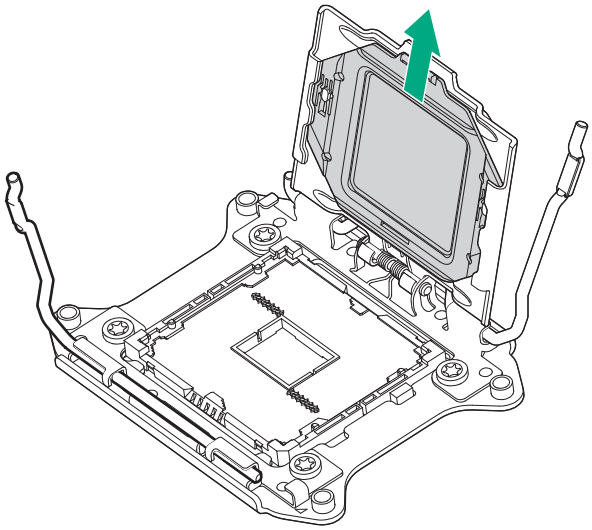

4. Install the processor.

   Verify that the processor is fully seated in the processor retaining bracket by visually inspecting the processor installation guides on either side of the processor. **THE PINS ON THE SYSTEM BOARD ARE VERY FRAGILE AND EASILY DAMAGED.**

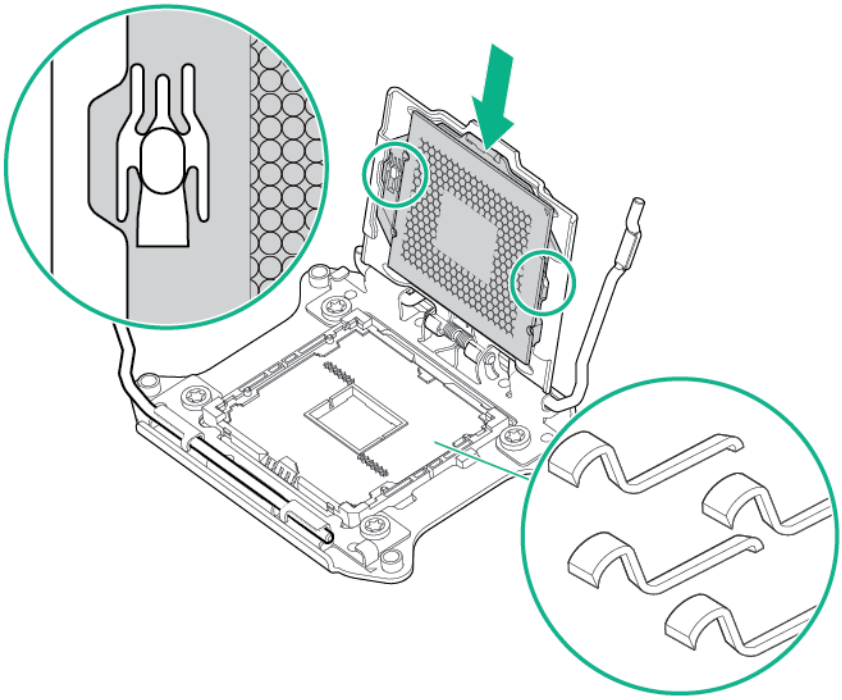

5. Close the processor retaining bracket. When the processor is installed properly inside the processor retaining bracket, the processor retaining bracket clears the flange on the front of the socket.
6. Press and hold the processor retaining bracket in place, and then close each processor locking lever.

   Press only in the area indicated on the processor retaining bracket.

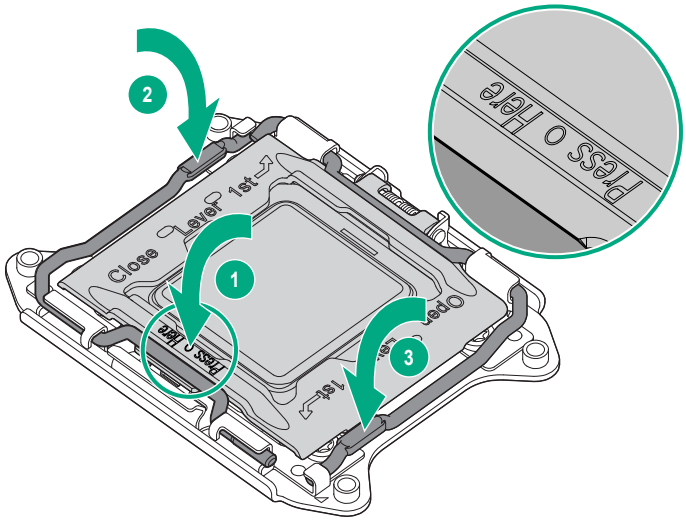

7. Install the processor socket cover on the failed system board.
8. Clean the old thermal grease from the heatsink and the top of the processor with the alcohol swab.

   Allow the alcohol to evaporate before continuing.
9. Apply all the grease to the top of the processor in the following pattern to ensure even distribution.

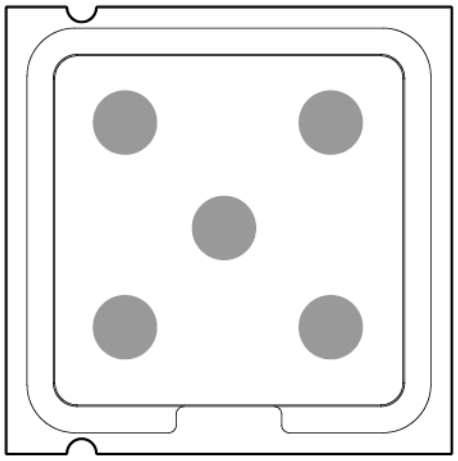

10. **Install the heatsink**.
11. Install the fans.
12. Install all components removed from the failed system board.
13. Connect all cables disconnected from the failed system board.
14. Install the PCI riser cages.
15. Install the access panel:
    a. Place the access panel on top of the server with the access panel latch open.

       Allow the panel to extend past the rear of the server by approximately 1.25 cm (0.5 inch).
    b. Close the access panel latch.

       The access panel slides to a closed position.
    c. Use a T-15 Torx screwdriver to tighten the access panel latch screw.
16. Do one of the following:
    - Slide the server into the rack.
    - Install the server into the rack.
17. Connect each power cord to the server.
18. Connect each power cord to the power source.
19. Press the Power On/Standby button.

    The server exits standby mode and applies full power to the system. The system power LED changes from amber to green.

    IMPORTANT:
    Install all components with the same configuration that was used on the failed system board.
20. **Re-enter the server serial number and product ID**.

Install the system board

Procedure

1. Install the two DIMM guards removed from the system board on the replacement system board.

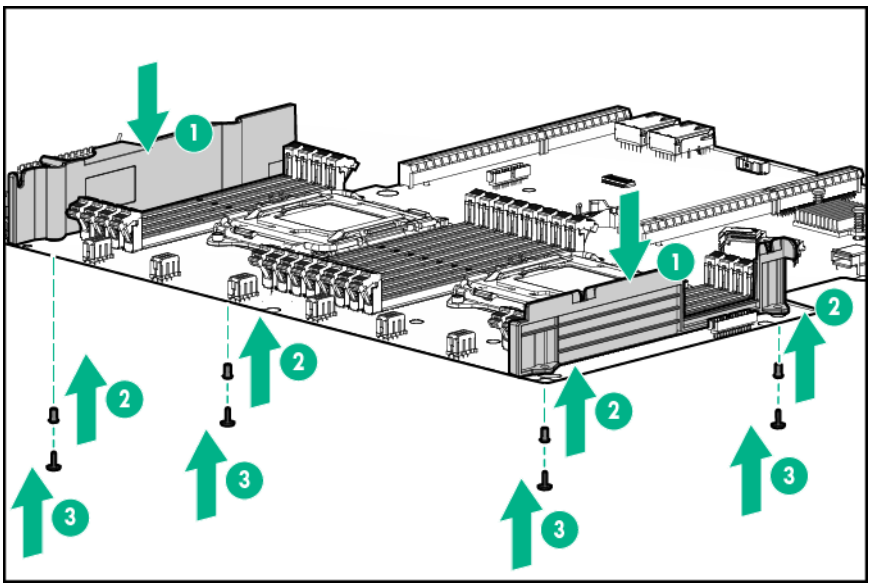

2. Install the system board assembly.

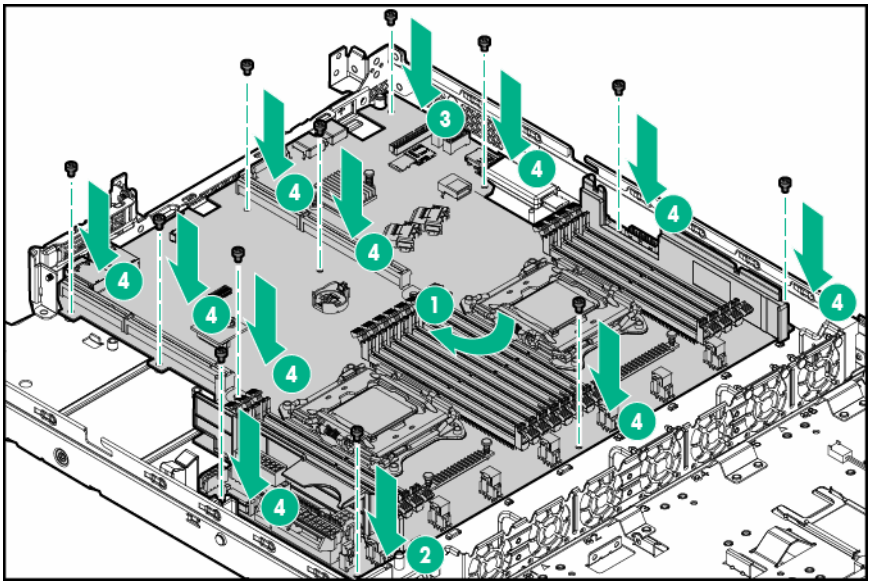

HPE 550 W Power Supply (non-hot-plug)

WARNING:
To reduce the risk of personal injury from hot surfaces, allow the drives and the internal system components to cool before touching them.

CAUTION:
To prevent damage to electrical components, take the appropriate anti-static precautions before beginning any installation, removal, or replacement procedure. Improper grounding can cause electrostatic discharge.

1. **Power down the server**.
2. **Access the product rear panel**.
3. Release the power cord from the strain relief clip.

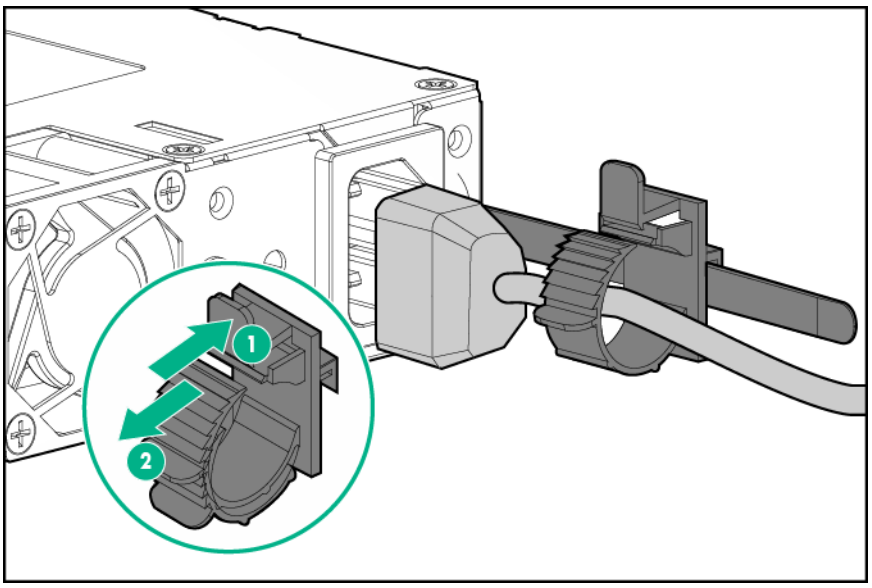

4. Remove all power:
   a. Disconnect the power cord from the power source.
   b. Disconnect the power cord from the server.
5. **Remove the server from the rack**..
6. **Remove the access panel**.
7. **If installed, remove the secondary PCI riser cage**.
8. Disconnect all power supply cables from the system board and any associated component (drive backplane, GPU, etc.).
9. Remove the non-hot-plug power supply.

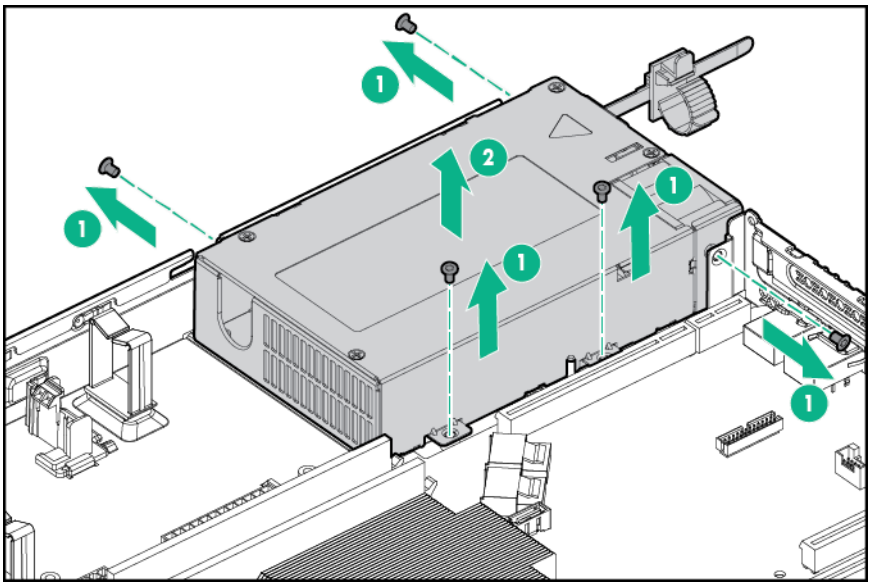

To replace the component, reverse the removal procedure.

DIMM guard

About this task

WARNING:
To reduce the risk of personal injury from hot surfaces, allow the drives and the internal system components to cool before touching them.

CAUTION:
To prevent damage to electrical components, take the appropriate anti-static precautions before beginning any installation, removal, or replacement procedure. Improper grounding can cause electrostatic discharge.

CAUTION:
To avoid ESD damage, when removing electrostatic-sensitive components from the failed system board, place the components on a static-dissipating work surface or inside separate antistatic bags.

Procedure

1. **Power down the server**.
2. Remove all power:
   a. Disconnect each power cord from the power source.
   b. Disconnect each power cord from the server.
3. Do one of the following:
   - **Extend the server from the rack**.
   - **Remove the server from the rack**.
4. **Remove the access panel**.
5. **Remove the fans**.
6. **Remove the fan blanks**.
7. **Remove the PCI riser cage**.
8. **Remove the dedicated iLO management module**.
9. Disconnect all cables connected to the system board.
10. **Remove the Smart Storage Battery**.
11. **Remove all DIMMs**.
12. If installed, remove the heatsink blank.
13. Remove the system board:
    a. Remove the system board screws.
    b. Lift the system board out of the chassis.

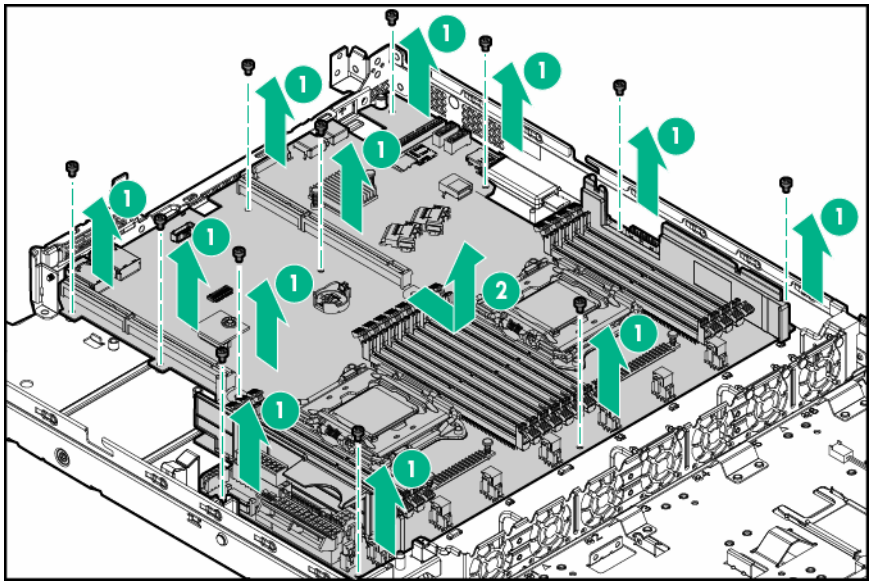

14. Remove the failed DIMM guard.

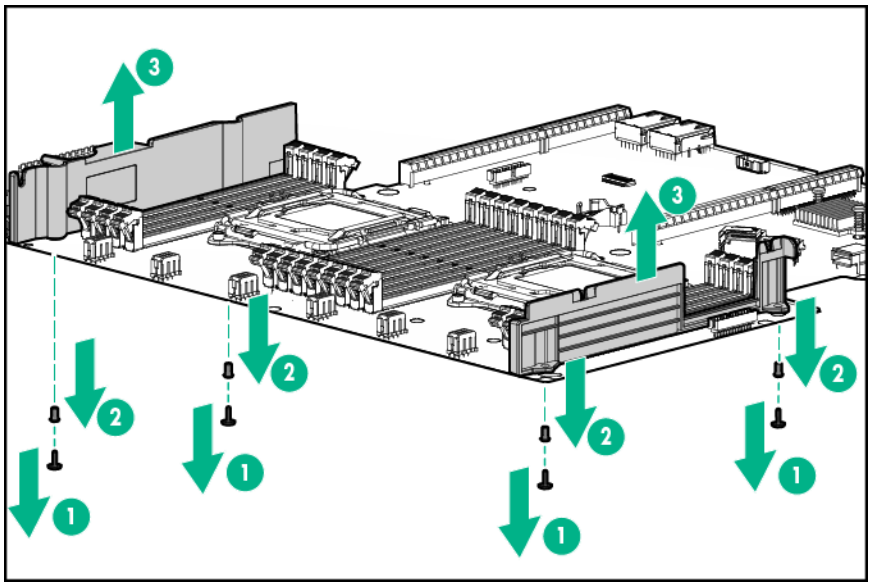

To replace the component, reverse the removal procedure.

Redundant power supply components

Power input module and RPS backplane characteristics

- HPE 800 W/900 W Gold AC Power Input Module (744689-B21)
  - This module is compatible with the AC RPS backplane (745813-B21).
  - The module wattage rating changes depending on whether one or two power input modules are installed in the server:
    - One power input module installed (nonredundant): 900 W
    - Two power input modules installed (redundant): 800 W
- HPE 900 W AC/240 V DC Gold Power Input Module (775595-B21)
  - This module is compatible with the AC/240 V DC RPS backplane (814835-B21).
  - The 240 V DC function of this module only applies to server installations based in China.

For more information about the power supply features, specifications, and compatibility, see the **Hewlett Packard Enterprise website**.

Hot-plug power input module

1. If the server is using a single hot-plug power input module only, **power down the server**.
2. **Access the product rear panel**.
3. Release the power cord from the hook-and-loop strap.

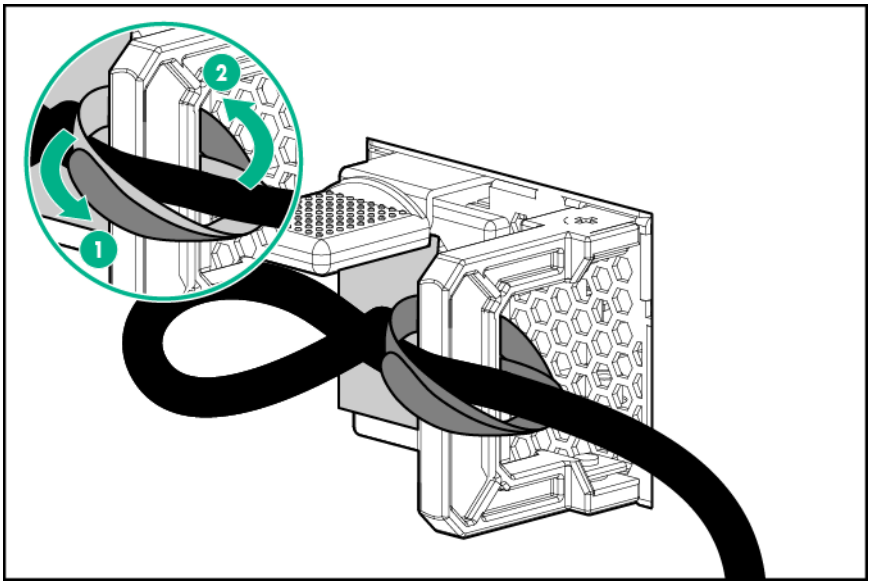

4. Disconnect the power cord from the power source.
5. Remove the power input module.

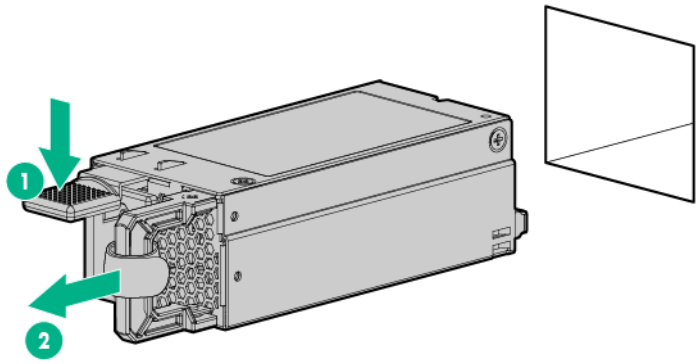

To replace the component, reverse the removal procedure.

Redundant power supply backplane

About this task

WARNING:
To reduce the risk of personal injury from hot surfaces, allow the drives and the internal system components to cool before touching them.

CAUTION:
To prevent damage to electrical components, take the appropriate anti-static precautions before beginning any installation, removal, or replacement procedure. Improper grounding can cause electrostatic discharge.

Procedure

1. **Power down the server**.
2. **Access the product rear panel**.
3. Release the power cord from the hook-and-loop strap.

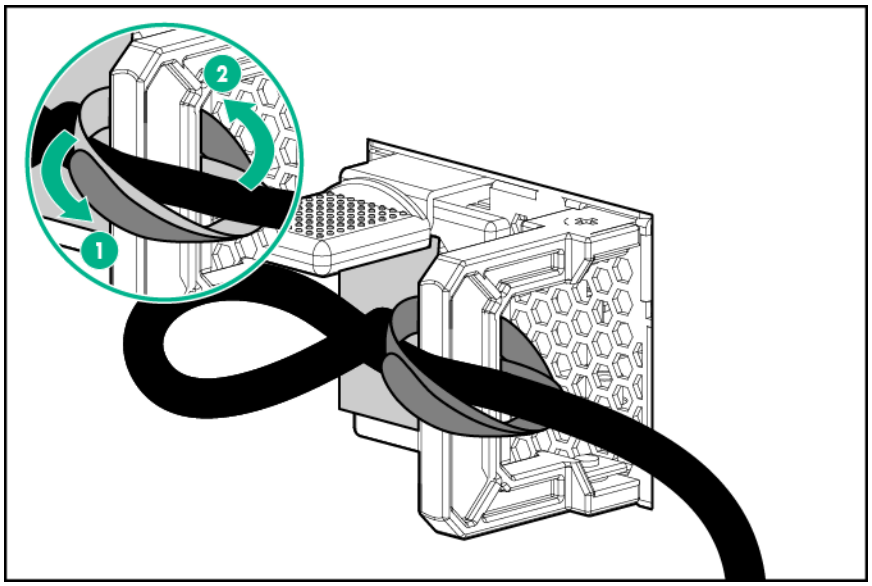

4. Remove all power:
   a. Disconnect each power cord from the power source.
   b. Disconnect each power cord from the server.
5. **Remove all installed power input modules**.
6. **Remove the server from the rack**.
7. Place the server on a sturdy, level surface.
8. **Remove the access panel**.
9. **If installed, remove the secondary PCI riser cage**.
10. Disconnect the RPS backplane cables.

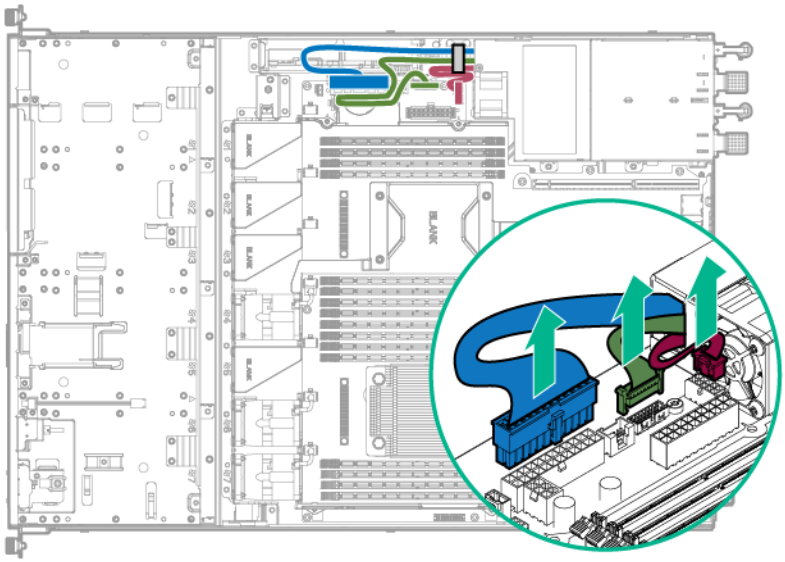

11. Remove the RPS backplane.

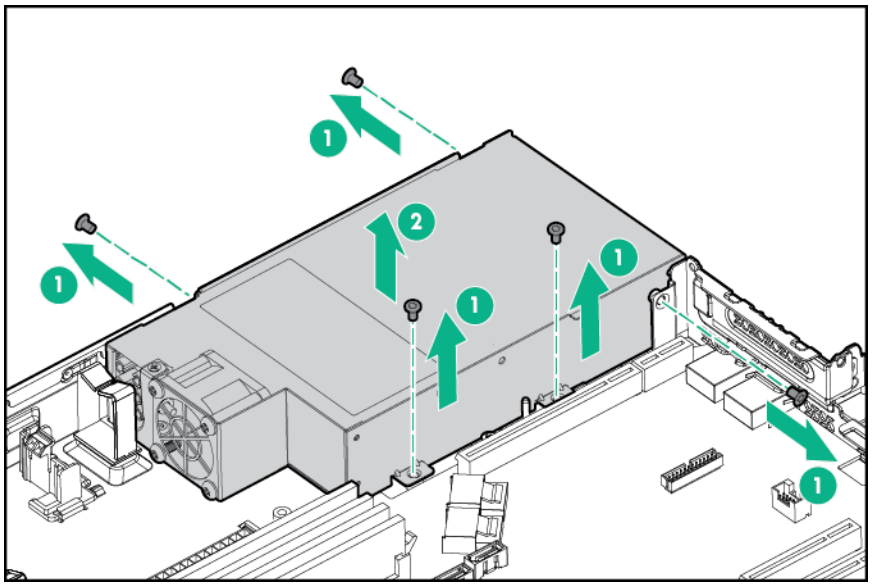

To replace the component, reverse the removal procedure.

HP Trusted Platform Module

The TPM is not a customer-removable part.

CAUTION:
Any attempt to remove an installed TPM from the system board breaks or disfigures the TPM security rivet. Upon locating a broken or disfigured rivet on an installed TPM, administrators should consider the system compromised and take appropriate measures to ensure the integrity of the system data.

If you suspect a TPM board failure, leave the TPM installed and remove the system board. Contact a Hewlett Packard Enterprise authorized service provider for a replacement system board and TPM board.

Troubleshooting

Troubleshooting resources

The HPE ProLiant Gen9 Troubleshooting Guide, Volume I: Troubleshooting provides procedures for resolving common problems and comprehensive courses of action for fault isolation and identification, issue resolution, and software maintenance on ProLiant servers and server blades. To view the guide, select a language:

- **English**
- **French**
- **Spanish**
- **German**
- **Japanese**
- **Simplified Chinese**

The HPE ProLiant Gen9 Troubleshooting Guide, Volume II: Error Messages provides a list of error messages and information to assist with interpreting and resolving error messages on ProLiant servers and server blades. To view the guide, select a language:

- **English**
- **French**
- **Spanish**
- **German**
- **Japanese**
- **Simplified Chinese**

Diagnostic tools

Product QuickSpecs

For more information about product features, specifications, options, configurations, and compatibility, see the product QuickSpecs on the **Hewlett Packard Enterprise website**.

HPE iLO

iLO is a remote server management processor embedded on the system boards of HPE ProLiant and Synergy servers. iLO enables the monitoring and controlling of servers from remote locations. HPE iLO management is a powerful tool that provides multiple ways to configure, update, monitor, and repair servers remotely. iLO (Standard) comes preconfigured on HPE servers **without an additional cost or license**.

Features that enhance server administrator productivity are licensed. For more information, see the iLO 4 documentation on the **Hewlett Packard Enterprise website**.

Active Health System

The HPE Active Health System provides the following features:

- Combined diagnostics tools/scanners
- Always on, continuous monitoring for increased stability and shorter downtimes
- Rich configuration history
- Health and service alerts
- Easy export and upload to Service and Support

The Active Health System monitors and records changes in the server hardware and system configuration. The Active Health System assists in diagnosing problems and delivering rapid resolution if server failures occur.

The Active Health System collects the following types of data:

- Server model
- Serial number
- Processor model and speed
- Storage capacity and speed
- Memory capacity and speed
- Firmware/BIOS

Active Health System does not collect information about Active Health System users' operations, finances, customers, employees, partners, or data center, such as IP addresses, host names, user names, and passwords. Active Health System does not parse or change operating system data from third-party error event log activities, such as content created or passed through by the operating system.

The data that is collected is managed according to the Hewlett Packard Enterprise Data Privacy policy. For more information, see the **Hewlett Packard Enterprise website**.

The Active Health System, in conjunction with the system monitoring provided by Agentless Management or SNMP Pass-thru, provides continuous monitoring of hardware and configuration changes, system status, and service alerts for various server components.

The Agentless Management Service is available in the SPP, which can be downloaded from the **Hewlett Packard Enterprise website**. The Active Health System log can be downloaded manually from iLO 4 or HPE Intelligent Provisioning and sent to Hewlett Packard Enterprise.

For more information, see the following documents:

- *iLO User Guide* on the **Hewlett Packard Enterprise website**
- *Intelligent Provisioning User Guide* on the **Hewlett Packard Enterprise website**

HPE ProLiant Pre-boot Health Summary

If the server will not start up, you can use iLO to display diagnostic information on an external monitor. This feature is supported on servers that support external video and have a UID button or an SUV connector. When power is available to the server but the server is not powered on, iLO runs on auxiliary power and can take control of the server video adapter to display the HPE ProLiant Pre-boot Health Summary.

For additional information, see the following documents:

- *iLO 4 User Guide* — See the **Hewlett Packard Enterprise website**.
- ProLiant Gen9 Troubleshooting Guide, Volume I: Troubleshooting — See **Troubleshooting resources**.

Integrated Management Log

The IML records hundreds of events and stores them in an easy-to-view form. The IML timestamps each event with one-minute granularity.

You can view recorded events in the IML in several ways, including the following:

- From within HPE SIM
- From within the UEFI System Utilities
- From within the Embedded UEFI shell
- From within operating system-specific IML viewers:
  - For Windows: IML Viewer
  - For Linux: IML Viewer Application
- From within the iLO web interface
- From within Insight Diagnostics

UEFI System Utilities

The UEFI System Utilities is embedded in the system ROM. The UEFI System Utilities enable you to perform a wide range of configuration activities, including:

- Configuring system devices and installed options
- Enabling and disabling system features
- Displaying system information
- Selecting the primary boot controller
- Configuring memory options
- Selecting a language
- Launching other preboot environments such as the Embedded UEFI Shell and Intelligent Provisioning

For more information, see the UEFI System Utilities user guide for your product on the **Hewlett Packard Enterprise website**.

To access mobile-ready online help for the UEFI System Utilities and UEFI Shell, scan the QR code at the bottom of the screen. For on-screen help, press the **F1** key.

Using UEFI System Utilities

To use the UEFI System Utilities, use the following keys.

Action	Key
Access System Utilities	F9 during server POST
Navigate menus	Up and Down arrows
Select items	Enter
Save selections	F10
Access Help for a highlighted configuration option*	F1

*Scan the QR code on the screen to access online help for the UEFI System Utilities and UEFI Shell.

Default configuration settings are applied to the server at one of the following times:

- Upon the first system power-up
- After defaults have been restored

Default configuration settings are sufficient for typical server operations; however, you can modify configuration settings as needed. The system prompts you for access to the UEFI System Utilities each time the system is powered up.

Embedded Diagnostics option

The system BIOS in all ProLiant Gen9 servers includes an Embedded Diagnostics option in the ROM. The Embedded Diagnostics option can run comprehensive diagnostics of the server hardware, including processors, memory, drives, and other server components.

For more information on the Embedded Diagnostics option, see the UEFI System Utilities user guide for your server on the **Hewlett Packard Enterprise website**.

Re-entering the server serial number and product ID

About this task

After you replace the system board, you must re-enter the server serial number and the product ID:

Procedure

1. During the server startup sequence, press the **F9** key to access UEFI System Utilities.
2. Select **System Configuration** > **BIOS/Platform Configuration (RBSU)** > **Advanced Options** > **Advanced System ROM Options** > **Serial Number**, and then press the **Enter** key.
3. Enter the serial number and press the **Enter** key.

   The following message appears:

   ```
   The serial number should only be modified by qualified service personnel.
   This value should always match the serial number located on the chassis.
   ```
4. To clear the warning, press the **Enter** key.
5. Enter the serial number and press the **Enter** key.
6. Select **Product ID**.

   The following warning appears:

   ```
   Warning: The Product ID should ONLY be modified by qualified service
   personnel. This value should always match the Product ID located on the
   chassis.
   ```
7. Enter the product ID and press the **Enter** key.
8. To confirm exiting System Utilities, press the **F10** key.

   The server automatically reboots.

Insight Diagnostics

The Insight Diagnostics is a proactive server management tool, available in both offline and online versions. The tool provides diagnostics and troubleshooting capabilities to assist IT administrators who verify server installations, troubleshoot problems, and perform repair validation.

The Insight Diagnostics Offline Edition performs various in-depth system and component testing while the OS is not running. To run this utility, boot the server using Intelligent Provisioning.

The Insight Diagnostics Online Edition is a web-based application that captures system configuration and other related data needed for effective server management. Available in Microsoft Windows and Linux versions, the utility helps to ensure proper system operation.

For more information or to download the utility, see the **Hewlett Packard Enterprise website**. The Insight Diagnostics Online Edition is also available in the SPP.

Insight Diagnostics survey functionality

Insight Diagnostics provides survey functionality that gathers critical hardware and software information on ProLiant servers.

This functionality supports operating systems that the server supports. For operating systems supported by the server, see the **Hewlett Packard Enterprise website**.

If a significant change occurs between data-gathering intervals, the survey function marks the previous information and overwrites the survey data files to reflect the latest changes.

Survey functionality is installed with every Intelligent Provisioning-assisted Insight Diagnostics installation, or it can be installed through the SPP.

USB support

Hewlett Packard Enterprise servers support both USB 2.0 ports and USB 3.0 ports. Both port types support installing all types of USB devices (USB 1.0, USB 2.0, and USB 3.0), but might run at lower speeds in specific situations:

- USB 3.0 capable devices operate at USB 2.0 speeds when installed in a USB 2.0 port.
- In UEFI Boot Mode, Hewlett Packard Enterprise provides legacy USB support in the preboot environment before the operating system loading for USB 1.0, USB 2.0, and USB 3.0 speeds.
- In Legacy BIOS Boot Mode, Hewlett Packard Enterprise provides legacy USB support in the preboot environment before the operating system loading for USB 1.0 and USB 2.0 speeds. USB 3.0 ports can be used with all devices in Legacy BIOS Boot Mode but are not available at USB 3.0 speeds in the preboot environment. Standard USB support (USB support from within the operating system) is provided by the OS through the appropriate USB device drivers. Support for USB 3.0 varies by operating system.

For maximum compatibility of USB 3.0 devices with all operating systems, Hewlett Packard Enterprise provides a configuration setting for USB 3.0 Mode. Auto is the default setting. This setting impacts USB 3.0 devices when connected to USB 3.0 ports in the following manner:

- **Auto (default)**—If configured in Auto Mode, USB 3.0 capable devices operate at USB 2.0 speeds in the preboot environment and during boot. When a USB 3.0 capable OS USB driver loads, USB 3.0 devices transition to USB 3.0 speeds. This mode is compatible with operating systems that do not support USB 3.0 while allowing USB 3.0 devices to operate at USB 3.0 speeds with state-of-the-art operating systems.
- **Enabled**—If Enabled, USB 3.0 capable devices operate at USB 3.0 speeds at all times (including the preboot environment) when in UEFI Boot Mode. Do not use this mode with operating systems that do

not support USB 3.0. If operating in Legacy Boot BIOS Mode, the USB 3.0 ports cannot function in the preboot environment and are not bootable.
- **Disabled**—If configured for Disabled, USB 3.0 capable devices function at USB 2.0 speeds at all times.

The pre-OS behavior and default operation of the USB ports is configurable in the UEFI System Utilities. For more information, see the UEFI System Utilities user guide for your product on the **Hewlett Packard Enterprise website**.

External USB functionality

Hewlett Packard Enterprise provides external USB support to enable local connection of USB devices for server administration, configuration, and diagnostic procedures.

For additional security, external USB functionality can be disabled through USB options in UEFI System Utilities.

HPE Smart Storage Administrator

The HPE SSA is a configuration and management tool for HPE Smart Array controllers.

The HPE SSA exists in three interface formats: the HPE SSA GUI, the HPE SSA CLI, and HPE SSA Scripting. Although all formats support configuration tasks, some of the advanced tasks are available in only one format.

Some HPE SSA features include the following:

- Support for online array capacity expansion, logical drive extension, assignment of online spares, and RAID or stripe size migration
- Diagnostic and SmartSSD Wear Gauge functionality on the Diagnostics tab
- Access to additional features for supported controllers

For more information about HPE SSA, see the **Hewlett Packard Enterprise website**.

Automatic Server Recovery

ASR is a feature that causes the system to restart when a catastrophic operating system error occurs, such as a blue screen, ABEND, or panic. A system fail-safe timer, the ASR timer, starts when the System Management driver, also known as the Health Driver, is loaded. When the operating system is functioning properly, the system periodically resets the timer. However, when the operating system fails, the timer expires and restarts the server.

ASR increases server availability by restarting the server within a specified time after a system hang. You can disable ASR from the System Management Homepage or through UEFI System Utilities.

Component identification

Front panel components

- Four-bay LFF drive model

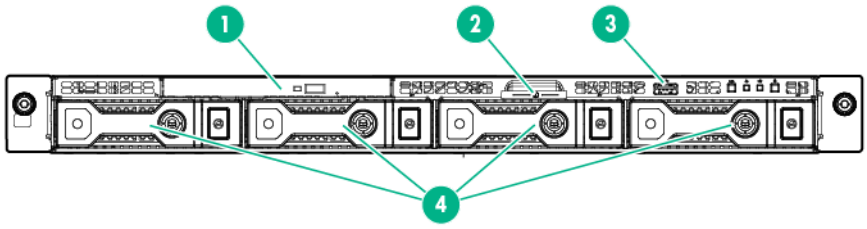

Item	Description
1	Optical drive (optional)
2	Serial label pull tab The serial number/iLO information pull tab is double-sided. The top side shows the server serial number and the customer asset tag label. The reverse side shows the default iLO account information and the QR code label. Use your mobile device to scan the QR code label to display **the server mobile product page**. This page contains links to server setup information, spare part numbers, QuickSpecs, troubleshooting resources, and other useful product links.
3	USB 2.0 connector
4	LFF drives (8.89 cm, 3.5 in)

- Eight-bay SFF drive model

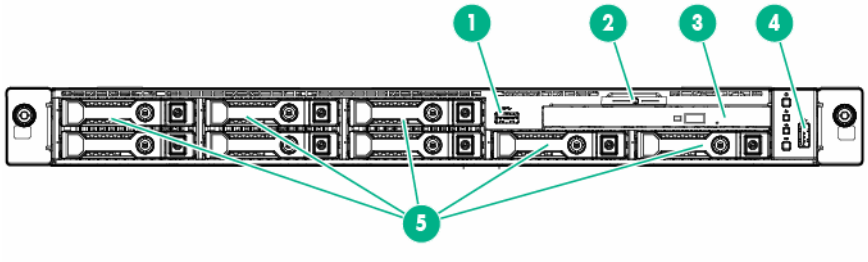

Item	Description
1	Front USB 3.0 connector (optional)
2	Serial label pull tab The serial number/iLO information pull tab is double-sided. The top side shows the server serial number and the customer asset tag label. The reverse side shows the default iLO account information and the QR code label. Use your mobile device to scan the QR code label to display **the server mobile product page**. This page contains links to server setup information, spare part numbers, QuickSpecs, troubleshooting resources, and other useful product links.
3	Optical drive (optional)
4	USB 2.0 connector
5	SFF drives (6.35 cm, 2.5 in)

Front panel LEDs and buttons

- Four-bay LFF drive model

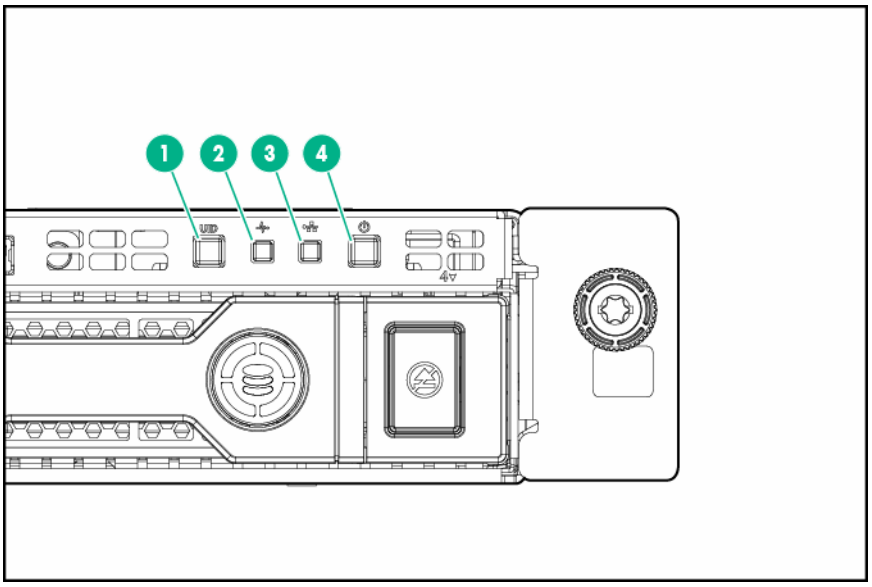

- Eight-bay SFF drive model

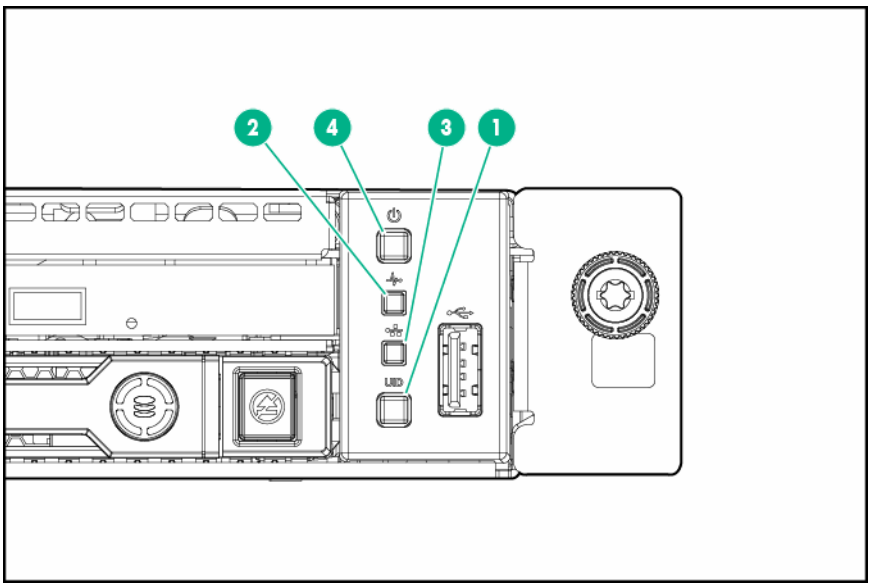

Item	Description	Status
1	UID button/LED	Solid blue = Activated Flashing blue: ◦ 1 flash per second = Remote management or firmware upgrade in progress ◦ 4 flashes per second = iLO manual reboot sequence initiated ◦ 8 flashes per second = iLO manual reboot sequence in progress Off = Deactivated
2	Health LED	Solid green = Normal Flashing green (1 flash per second) = iLO is rebooting Flashing amber = System degraded Flashing red (1 flash per second) = System critical If the health LED indicates a degraded or critical state, review the system **IML** or use **iLO** to review the system health status.

Table Continued

Item	Description	Status
3	NIC status LED	Solid green = Link to network Flashing green (1 flash per second) = Network active Off = No network activity
4	Power On/Standby button and system power LED	Solid green = System on Flashing green (1 flash per second) = Performing power on sequence Solid amber = System in standby Off = No power present If the system power LED is off, verify the following conditions: ◦ Facility power is present. ◦ The power supply is installed and is working correctly. ◦ The power cord is attached and is connected to a power source. ◦ The front I/O cable is connected.

When all four LEDs described in this table flash simultaneously, a power fault has occurred. For more information, see **Power fault LEDs**.

Front panel power fault LEDs

When all four front panel LEDs flash simultaneously, a power fault has occurred. The following table provides a list of power fault LEDs, and the subsystems that are affected. Not all power faults are used by all servers.

Subsystem	LED behavior
System board	1 flash
Processor	2 flashes
Memory	3 flashes
Riser board PCIe slots	4 flashes
FlexibleLOM	5 flashes
Removable HPE Flexible Smart Array controller/ Smart SAS HBA controller	6 flashes
System board PCIe slots	7 flashes
Power backplane or storage backplane	8 flashes
Power supply	9 flashes

Rear panel components

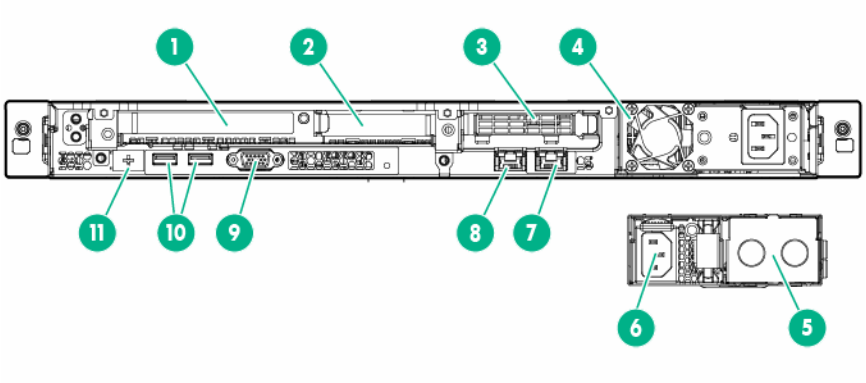

Item	Description
1	Slot 1 PCIe3 x16 (16, 8, 4, 1)
2	Slot 2 PCIe3 x8 (8, 4, 1)
3	Slot 3 PCIe3 x16 (16, 8, 4, 1)
4	Non-hot-plug power supply
5	Power supply blank (bay 2 of optional redundant power supply module)
6	Hot-plug power supply (bay 1 of optional redundant power supply module)
7	NIC connector 2
8	NIC connector 1
9	Video connector
10	USB 3.0 connectors
11	Dedicated iLO module connector (optional)

Rear panel LEDs

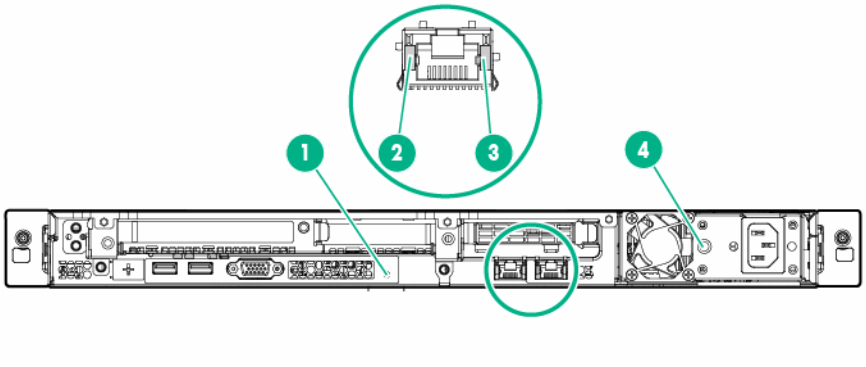

Item	Description	Status
1	UID LED	Solid blue = Activated Flashing blue: • 1 flash per second = Remote management or firmware upgrade in progress • 4 flashes per second = iLO manual reboot sequence initiated • 8 flashes per second = iLO manual reboot sequence in progress Off = Deactivated
2	NIC link LED	Green = Network link Off = No network link
3	NIC activity LED	Solid green = Link to network Flashing green = Network active Off = No network activity
4	Power supply LED	Solid green = Normal Off = One or more of the following conditions exists: • Power is unavailable • Power supply failed • Power supply is in standby mode • Power supply error

PCIe riser board slot definitions

Expansion Slots	Riser board options	Technology	Bus Width	Connector Width	Form Factor	Notes
1	PCIe riser FlexibleLOM	PCIe 3.0 FlexibleLOM	x16 x8	x16 x8	Full-height/ Half-length FlexibleLOM	Processor 1
2	PCIe riser	PCIe 3.0	x8	x8	Low-profile	Processor 1
3	PCIe riser	PCIe 3.0	x16	x16	Low-profile	Processor 2

System board components

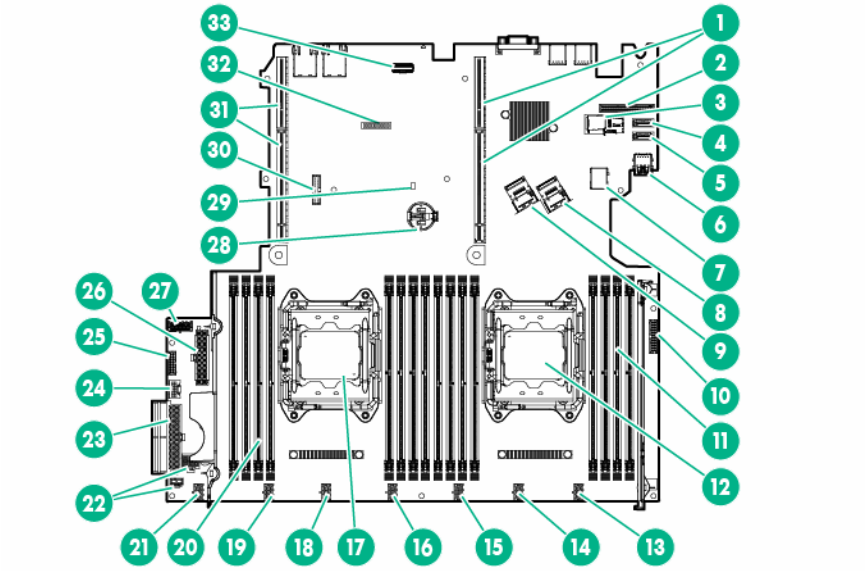

Item	Description
1	Primary PCIe riser board connectors*
2	Dedicated iLO module connector
3	microSD slot
4	SATA 5 connector (for M.2 SSD 2)
5	SATA 4 connector (for M.2 SSD 1 or optical drive)
6	Internal USB 3.0 connector (for USB flash devices)
7	8SFF front USB 3.0 connector
8	Mini-SAS connector 1
9	Mini-SAS connector 2
10	Front I/O connector
11	DIMM slots for processor 1
12	Processor 1
13	Fan connector 7
14	Fan connector 6
15	Fan connector 5
16	Fan connector 4
17	Processor 2
18	Fan connector 3
19	Fan connector 2
20	DIMM slots for processor 2

Table Continued

Item	Description
21	Fan connector 1
22	Reserved
23	24-pin power supply connector
24	Smart Storage Battery connector
25	Power supply sideband signal connector
26	20-pin drive power connector
27	10-pin RPS connector
28	System battery
29	NMI header
30	TPM connector
31	Secondary PCIe riser board connectors*
32	System maintenance switch
33	FlexibleLOM sideband signal connector

* For more information on the riser board slots supported by the onboard PCI riser connectors, see **PCIe riser board slot definitions**.

DIMM slot locations

DIMM slots are numbered sequentially (1 through 8) for each processor. The supported AMP modes use the letter assignments for population guidelines.

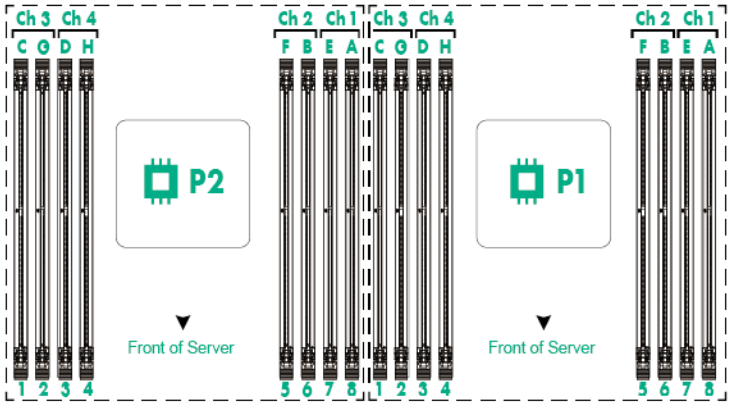

System maintenance switch

Position	Default	Function
S1	Off	Off = iLO 4 security is enabled. On = iLO 4 security is disabled.
S2	Off	Off = System configuration can be changed. On = System configuration is locked.
S3	Off	Reserved
S4	Off	Reserved
S5	Off	Off = Power-on password is enabled. On = Power-on password is disabled.
S6	Off	Off = No function On = ROM reads system configuration as invalid.
S7	Off	Off = Set default boot mode to UEFI. On = Set default boot mode to legacy.
S8	—	Reserved
S9	—	Reserved
S10	—	Reserved
S11	—	Reserved
S12	—	Reserved

To access the redundant ROM, set S1, S5 and S6 to On.

When the system maintenance S6 switch is set to the On position, the system will erase all system configuration settings from both CMOS and NVRAM on the next reboot. Clearing CMOS, NVRAM, or both deletes configuration information. Be sure to configure the server properly to prevent data loss.

Disabling the Dynamic Smart Array B140i Controller

Prerequisites

Before using the S7 switch to change the boot mode to Legacy BIOS Mode, you must first disable the Dynamic Smart Array B140i Controller.

About this task

To disable the Dynamic Smart Array B140i Controller:

Procedure

1. Reboot the server.

   The server restarts and the POST screen appears.
2. Press **F9**.
   The System Utilities screen appears.

3. Select **System Configuration -> BIOS/Platform Configuration (RBSU) -> System Options -> SATA Controller Options -> Embedded SATA Configuration**, and then press **Enter**.
4. Select **Enable SATA AHCI Support**, and then press **Enter**.
5. Press **F10** to save the selection.
6. Press **Y** to save the changes.

   The `Change saved confirmation` prompt appears.
7. Select **Exit and resume system boot**, and press **Enter**.

   The server continues the normal boot process.

NMI functionality

An NMI crash dump creates a crash dump log before resetting a system which is not responding.

Crash dump log analysis is an essential part of diagnosing reliability problems, such as failures of operating systems, device drivers, and applications. Many crashes freeze a system, and the only available action for administrators is to restart the system. Resetting the system erases any information which could support problem analysis, but the NMI feature preserves that information by performing a memory dump before a system reset.

To force the system to invoke the NMI handler and generate a crash dump log, do one of the following:

- Use the iLO Virtual NMI feature.
- Short the NMI header.

For more information, see the **Hewlett Packard Enterprise website**.

Drive numbering

- Four-bay LFF drive model

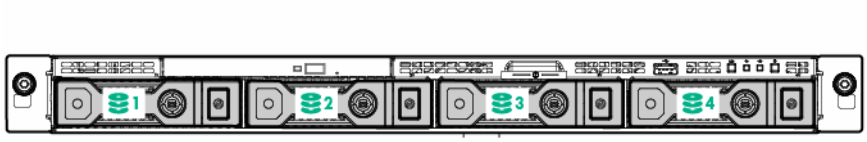

- Eight-bay SFF drive model

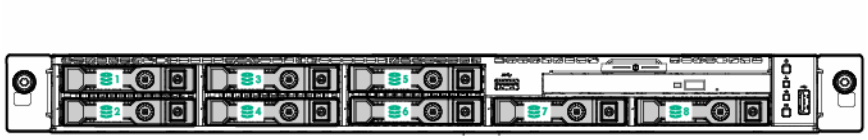

Hot-plug drive LED definitions

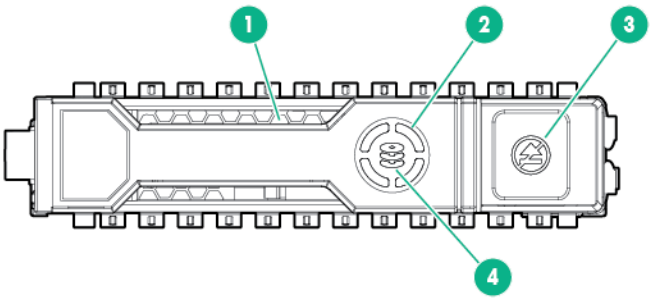

Item	LED	Status	Definition
1	Locate	Solid blue	The drive is being identified by a host application.
		Flashing blue	The drive carrier firmware is being updated or requires an update.
2	Activity ring	Rotating green	Drive activity.
		Off	No drive activity.
3	Do not remove	Solid white	Do not remove the drive. Removing the drive causes one or more of the logical drives to fail.
		Off	Removing the drive does not cause a logical drive to fail.
4	Drive status	Solid green	The drive is a member of one or more logical drives.
		Flashing green	The drive is rebuilding or performing a RAID migration, strip size migration, capacity expansion, or logical drive extension, or is erasing.
		Flashing amber/green	The drive is a member of one or more logical drives and predicts the drive will fail.
		Flashing amber	The drive is not configured and predicts the drive will fail.
		Solid amber	The drive has failed.
		Off	The drive is not configured by a RAID controller.

The blue Locate LED is behind the release lever and is visible when illuminated.

IMPORTANT:

The Dynamic Smart Array B140i Controller is only available in UEFI Boot Mode. It cannot be enabled in Legacy BIOS Boot Mode. If the B140i controller is disabled, drives connected to the system board Mini-SAS connectors operate in AHCI or Legacy mode. Under this condition:

- The drives cannot be a part of a hardware RAID or a logical drive.
- The Locate, Drive status, and Do not remove LEDs of the affected drives are disabled.

  Use BIOS/Platform Configuration (RBSU) in the **UEFI System Utilities** to enable or disable the B140i controller (System Configuration, BIOS/Platform Configuration (RBSU), System Options, SATA Controller Options, Embedded SATA Configuration).

Fan locations

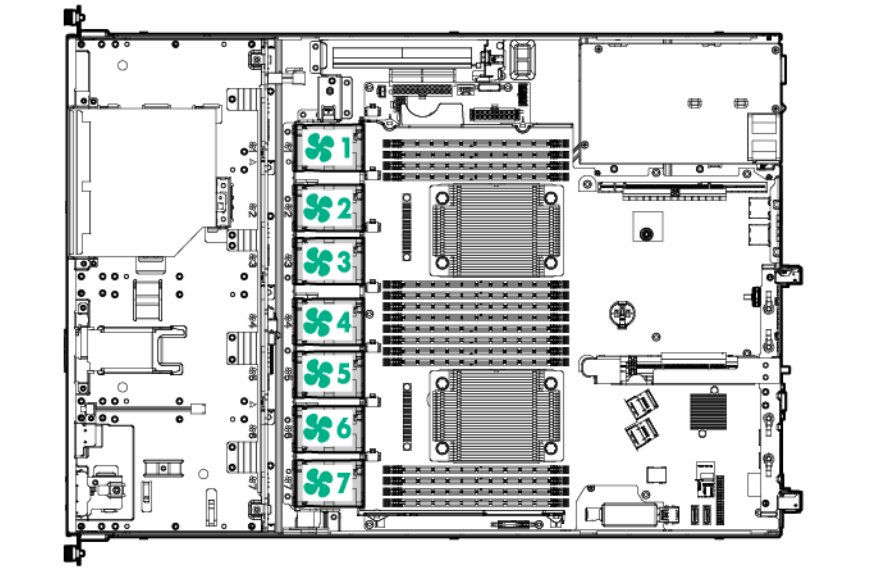

Cabling

Cabling overview

This section provides guidelines that help you make informed decisions about cabling the server and hardware options to optimize performance.

CAUTION:
When routing cables, always be sure that the cables are not in a position where they can be pinched or crimped.

Storage cabling

Depending on the controller option installed, the actual storage controller connectors might look different from what is shown in this section.

Four-bay LFF non-hot-plug drive cabling

- Four-bay LFF non-hot-plug drive backplane connected to the system board

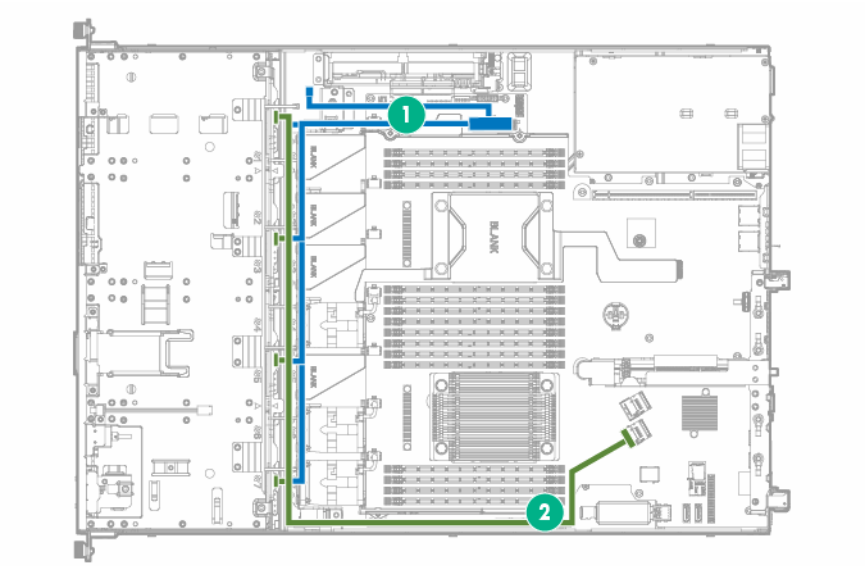

Item	Description
1	Drive power cable
2	Mini-SAS cable

Four-bay LFF hot-plug drive cabling

- Four-bay LFF drive backplane connected to the system board

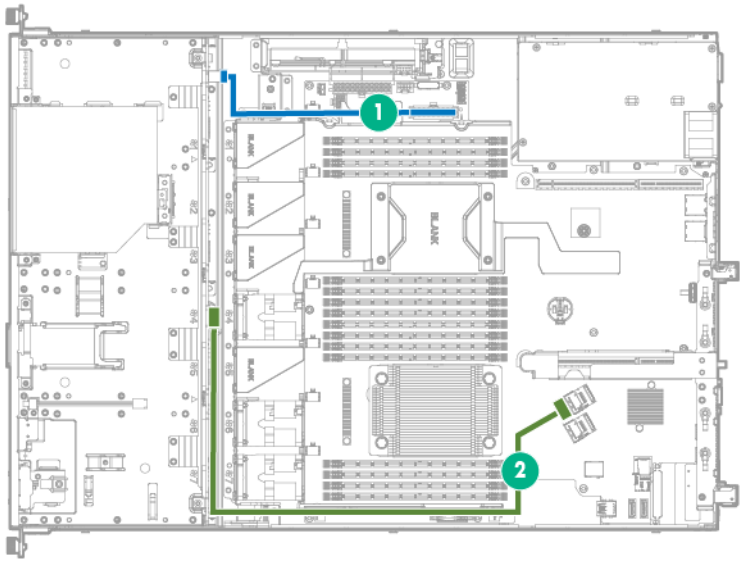

Item	Description
1	Drive power cable
2	Mini-SAS cable

- Four-bay LFF drive backplane connected to a P440 controller in the low-profile expansion slot

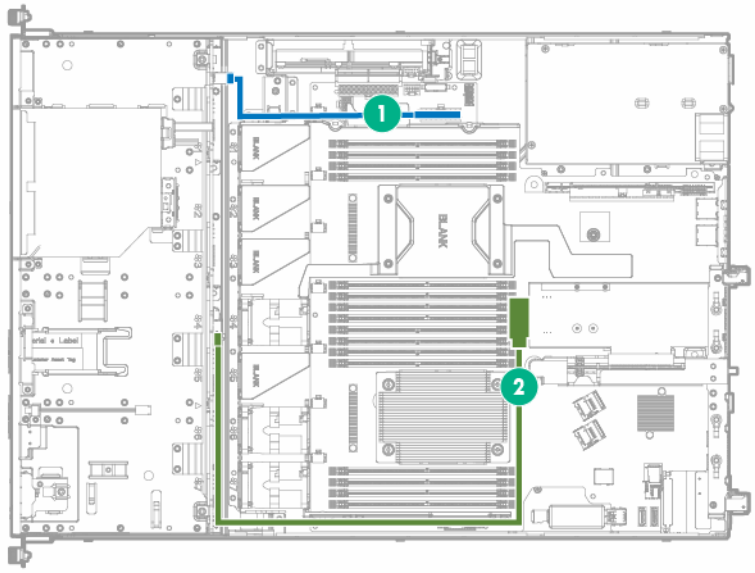

Item	Description
1	Drive power cable
2	Mini-SAS cable

- Four-bay LFF drive backplane connected to a H240 adapter in the low-profile expansion slot

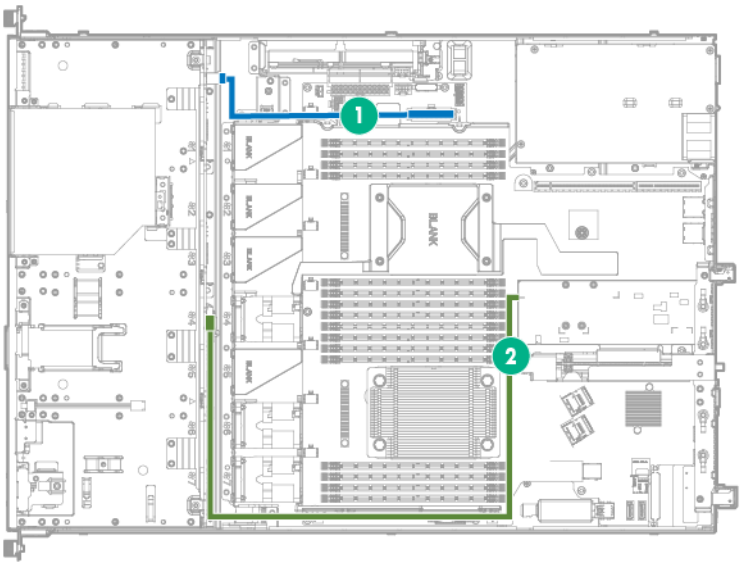

Item	Description
1	Drive power cable
2	Mini-SAS cable

Eight-bay SFF hot-plug drive cabling

- Eight-bay SFF drive backplane connected to the system board

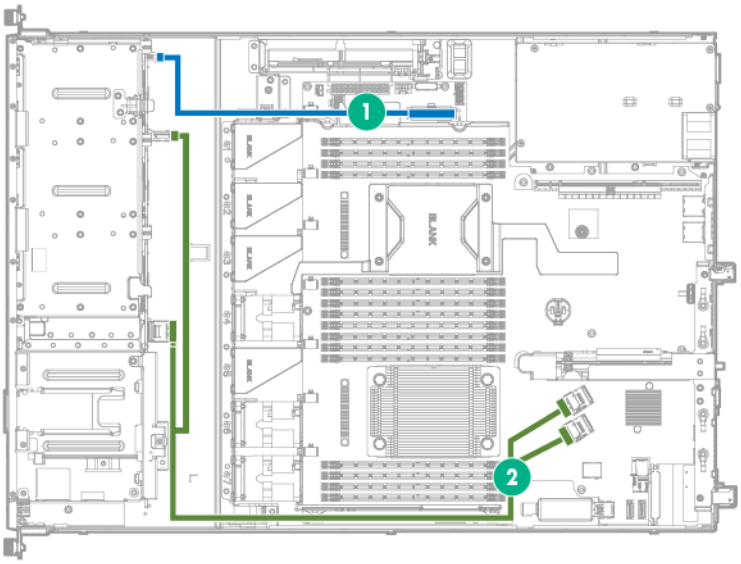

Item	Description
1	Drive power cable
2	Mini-SAS cable

- Eight-bay SFF drive backplane connected to a P440 controller in the low-profile expansion slot

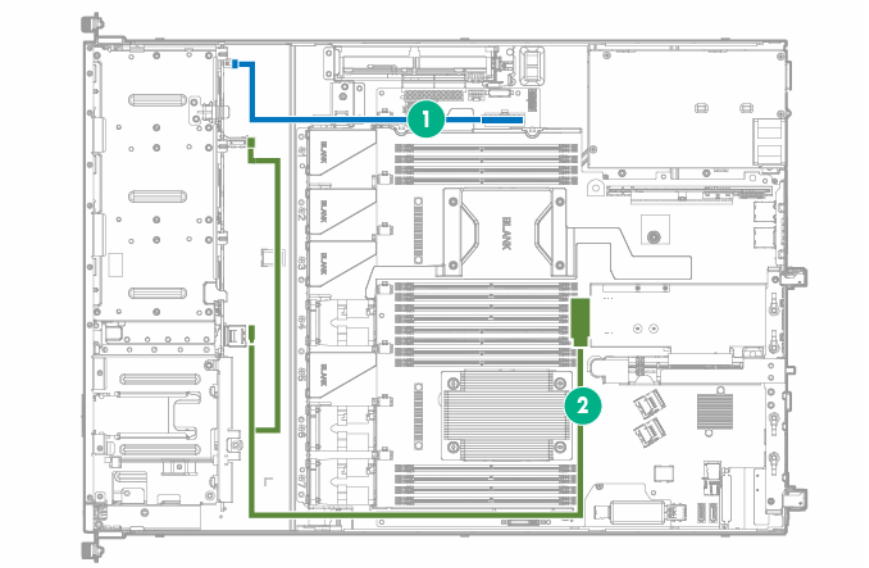

Item	Description
1	Drive power cable
2	Mini-SAS cable

- Eight-bay SFF drive backplane connected to a H240 adapter in the low-profile expansion slot

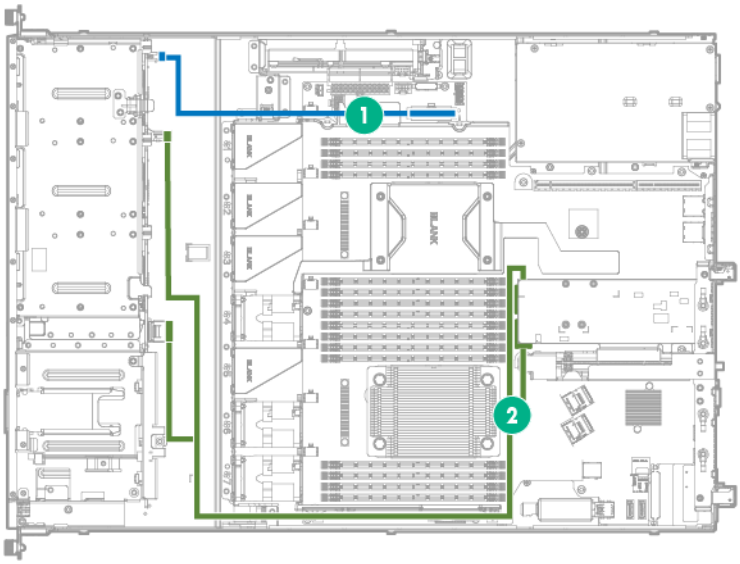

Item	Description
1	Drive power cable
2	Mini-SAS cable

M.2 SSD cabling

- Slot 1 cable routing

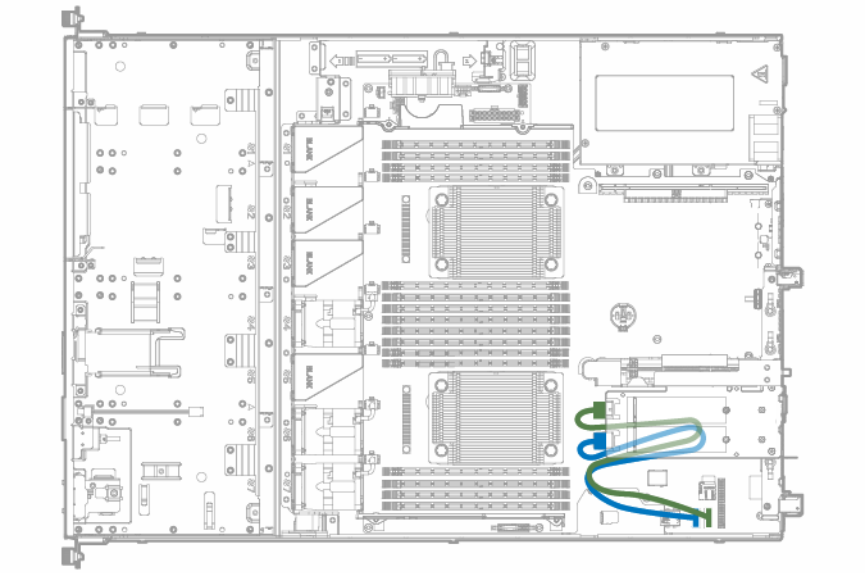

- Slot 2 cable routing

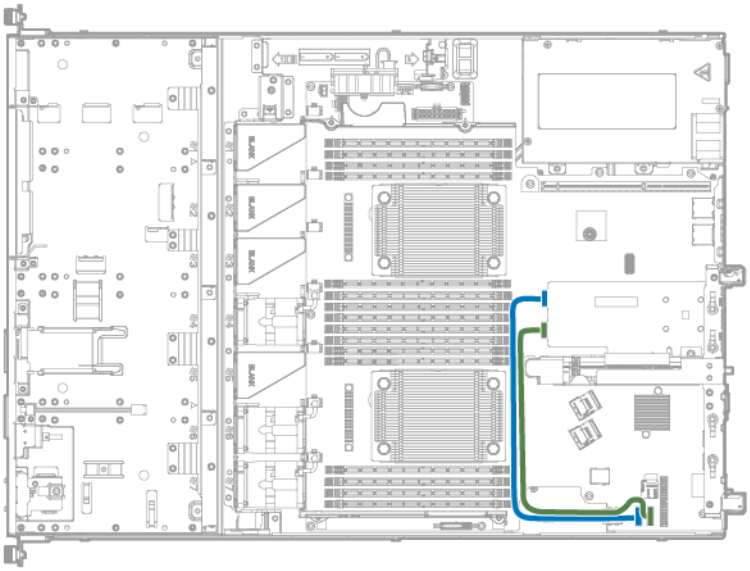

- Slot 3 cable routing

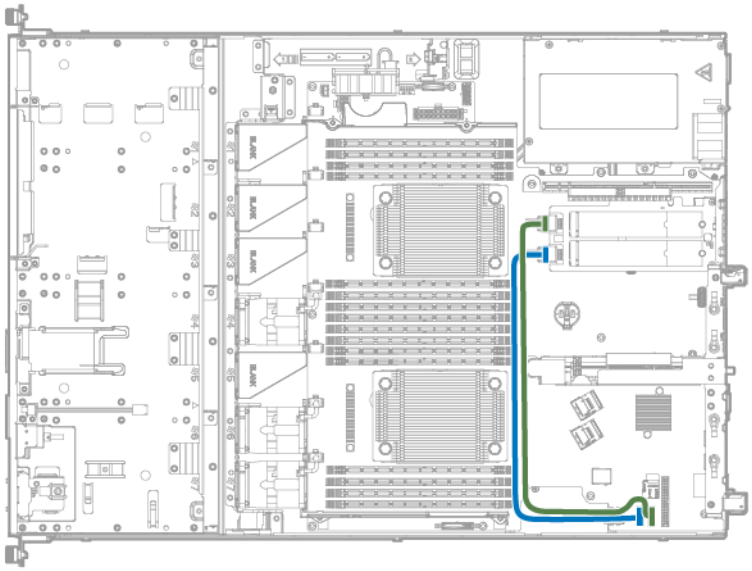

FBWC cabling

The FBWC solution is a separately purchased option. This server only supports FBWC module installation when a Smart Array P-Series controller is installed.

Depending on the controller option installed, the actual storage controller connectors might look different from what is shown in this section.

- FBWC module slot 1 cabling

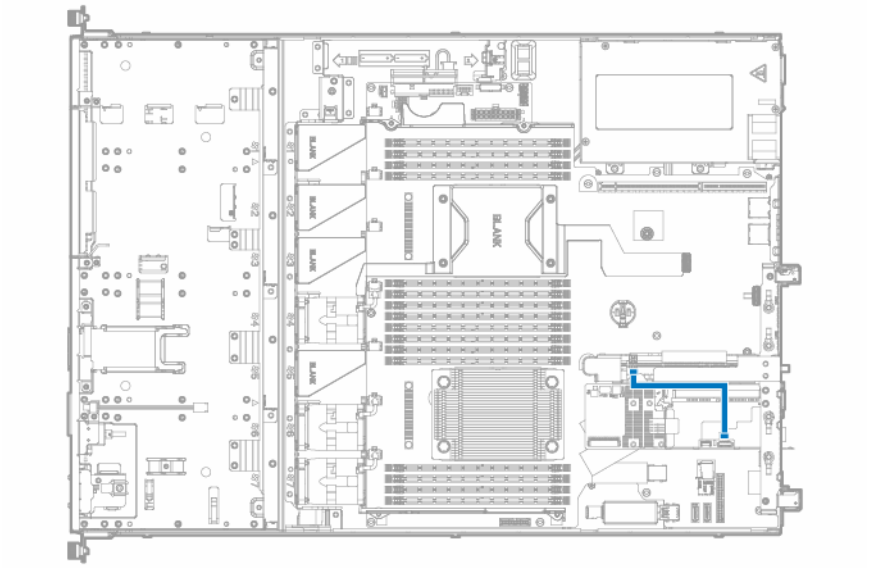

- FBWC module slot 2 cabling

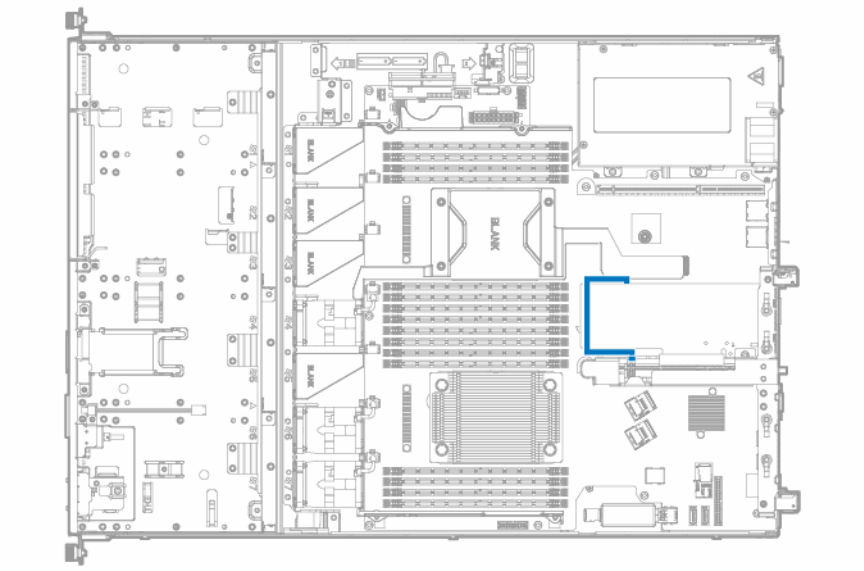

- FBWC module slot 3 cabling

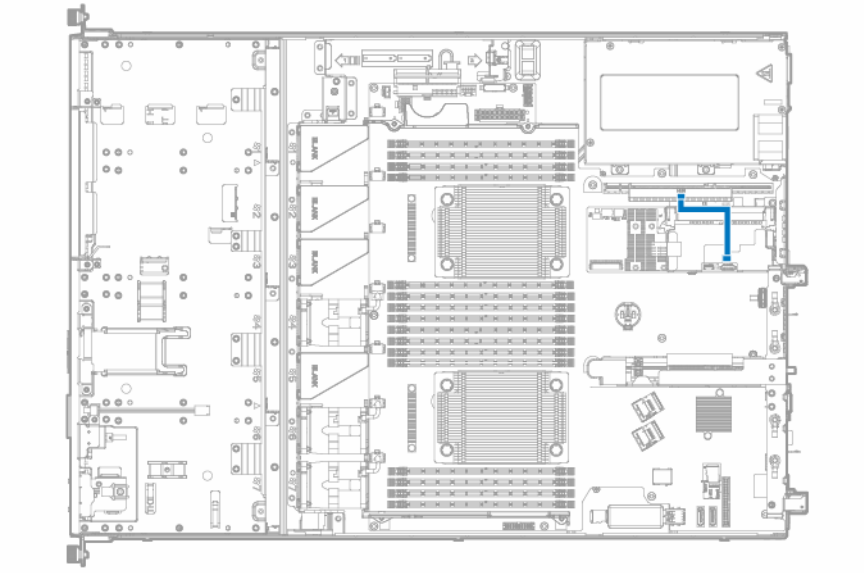

Smart Storage Battery cabling

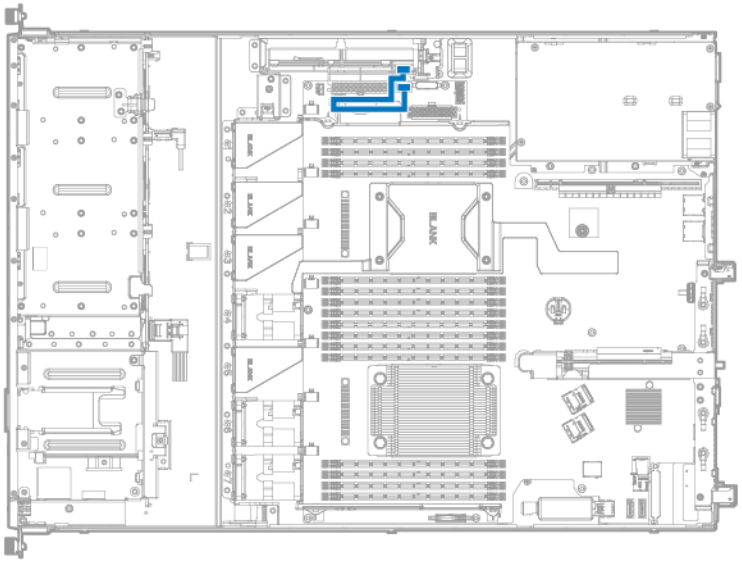

FlexibleLOM cabling

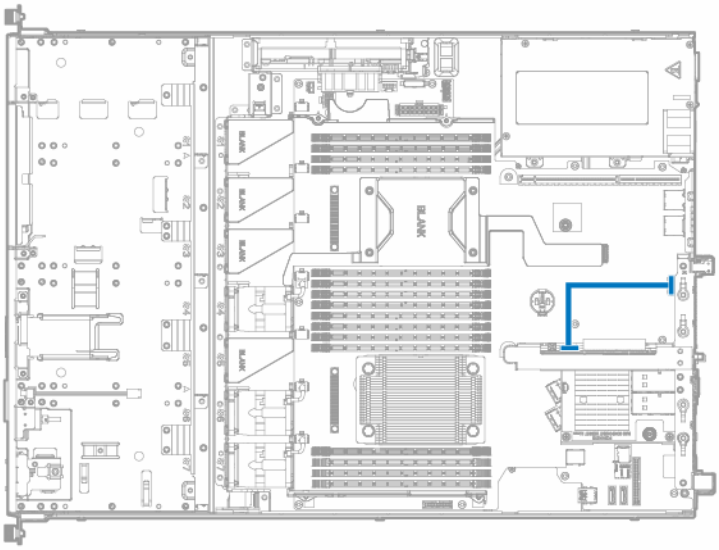

Power supply cabling

- HPE 550 W non-hot-plug power supply cabling

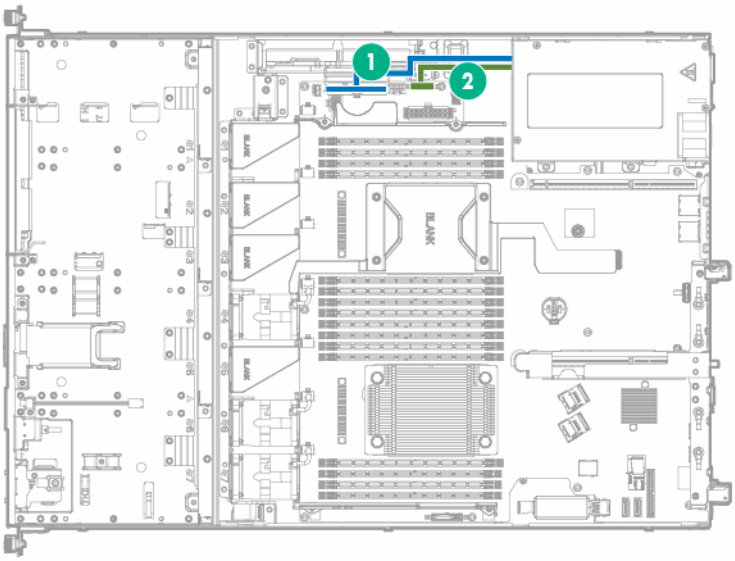

Item	Description
1	24-pin power supply cable
2	16-pin power supply sideband signal cable

- HPE 800 W/900 W hot-plug power supply cabling

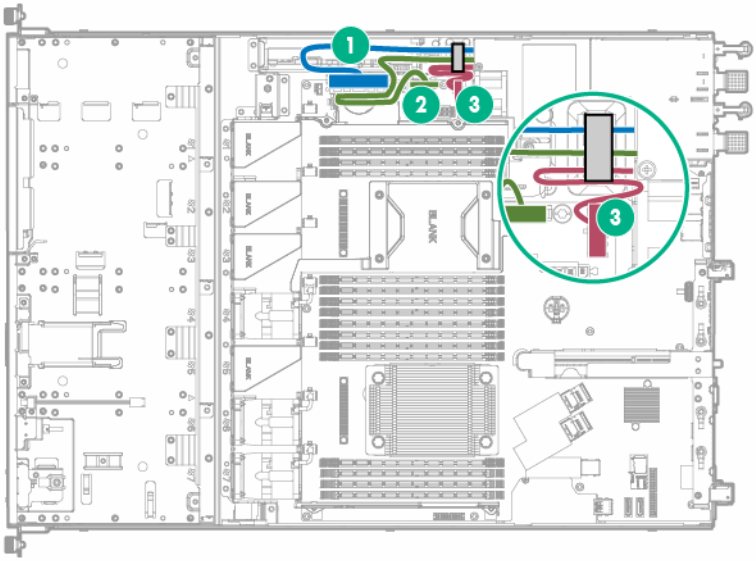

Item	Description
1	24-pin power supply cable
2	16-pin power supply sideband signal cable
3	10-pin RPS connector

- HPE AC/240 V DC RPS backplane

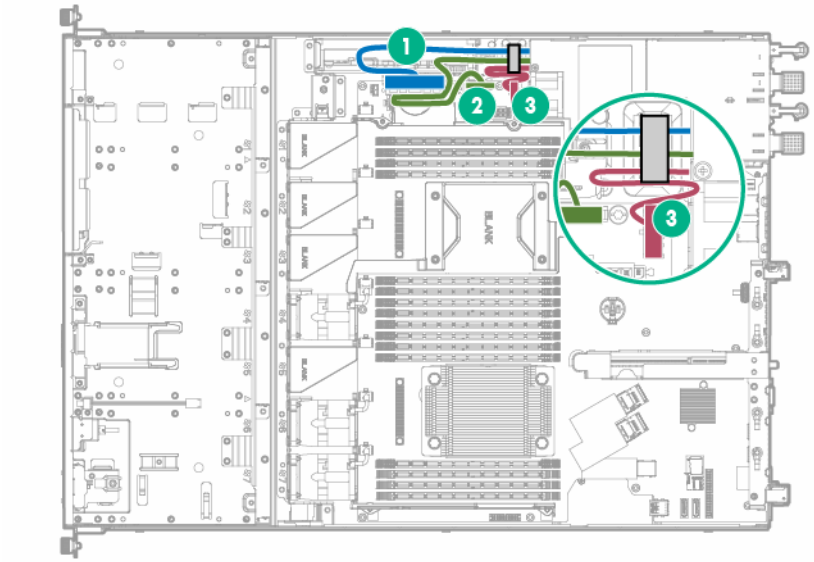

Item	Description
1	24-pin power supply cable
2	16-pin power supply sideband signal cable
3	10-pin RPS connector

Optical drive cabling

- Optical drive cabling in the four-bay LFF drive configuration

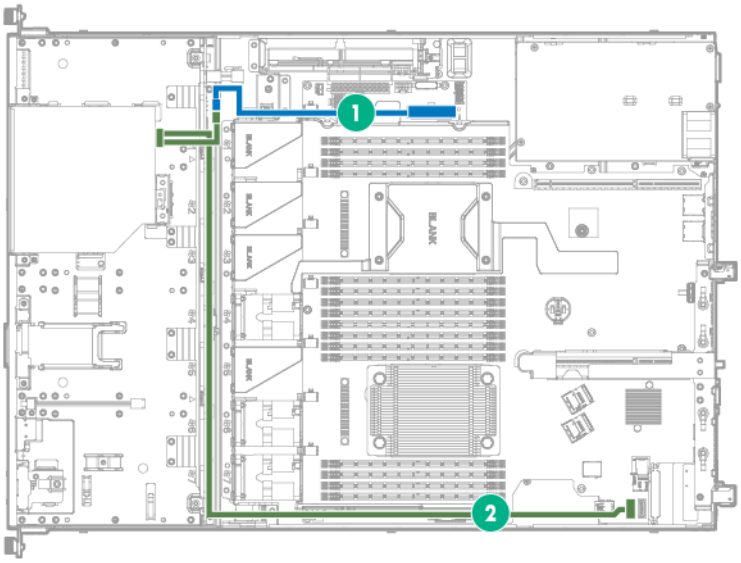

Item	Description
1	Drive power cable
2	Optical drive SATA and power cable

- Optical drive cabling in the eight-bay SFF drive configuration

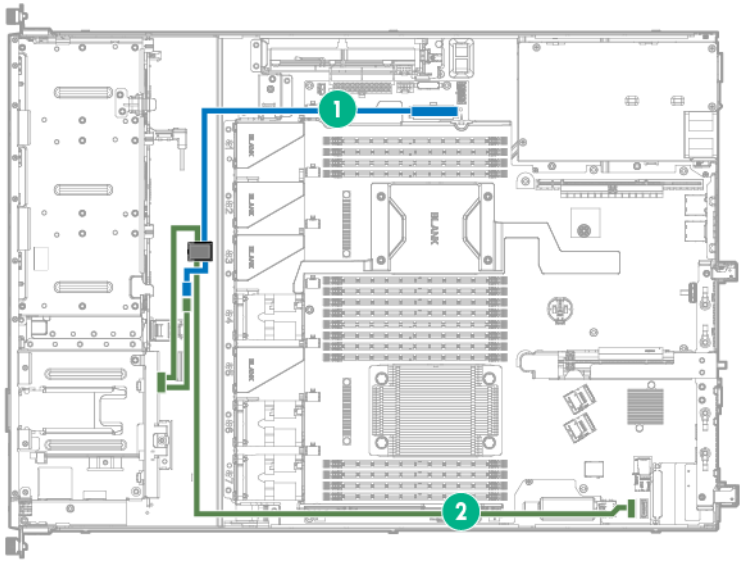

Item	Description
1	Drive power cable
2	Optical drive SATA and power cable

Front I/O cabling

- Front I/O cabling in LFF configuration

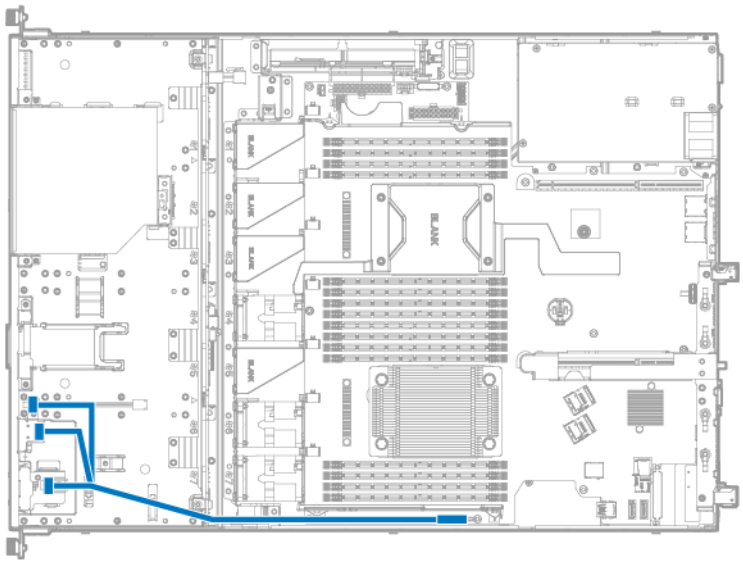

- Front I/O cabling in SFF configuration

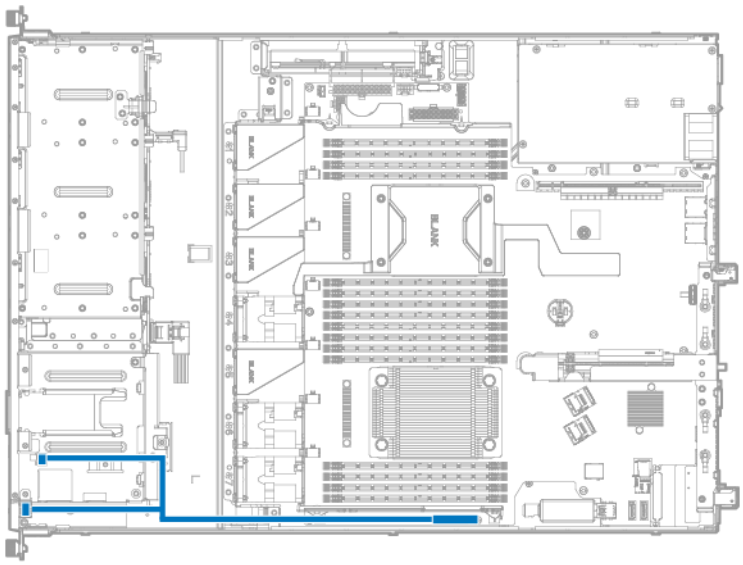

Front USB 3.0 cabling

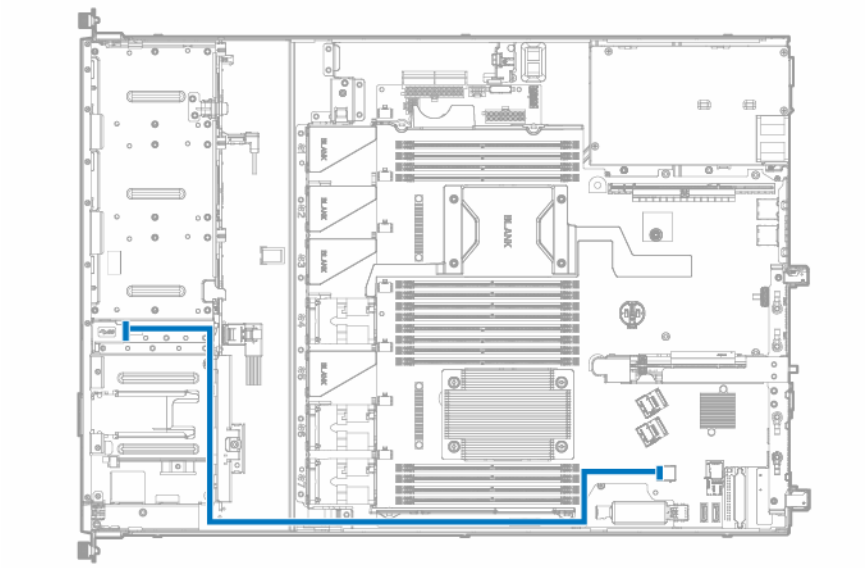

Specifications

Environmental specifications

Specifications	Value
Temperature range*	—
Operating	10°C to 35°C (50°F to 95°F)
Nonoperating	-30°C to 60°C (-22°F to 140°F)
Relative humidity (noncondensing)	—
Operating	Minimum to be the higher (more moisture) of -12°C (10.4°F) dew point or 8% relative humidity Maximum to be 24°C (75.2°F) dew point or 90% relative humidity
Nonoperating	5% to 95% 38.7°C (101.7°F), maximum wet bulb temperature

* All temperature ratings shown are for sea level. An altitude derating of 1.0°C per 304.8 m (1.8°F per 1000 ft) to 3048 m (10,000 ft) is applicable. No direct sunlight allowed. Maximum rate of change is 20°C per hour (36°F per hour). The upper limit and rate of change might be limited by the type and number of options installed.

For certain approved hardware configurations, the supported system inlet temperature range is extended:

- 5°C to 10°C (41°F to 50°F) and 35°C to 40°C (95°F to 104°F) at sea level with an altitude derating of 1.0°C per every 175 m (1.8°F per every 574 ft) above 900 m (2953 ft) to a maximum of 3048 m (10,000 ft).
- 40°C to 45°C (104°F to 113°F) at sea level with an altitude derating of 1.0°C per every 125 m (1.8°F per every 410 ft) above 900 m (2953 ft) to a maximum of 3048 m (10,000 ft).

The approved hardware configurations for this system are listed on the **Hewlett Packard Enterprise website**.

Mechanical specifications

Specification	Value
Height	4.29 cm (1.69 in)
Depth for models with LFF drive cage	60.76 cm (23.92 in)
Depth for models with SFF drive cage	60.76 cm (23.92 in)
Width	43.46 cm (17.11 in)
Weight (approximate range)	10.00 kg to 15.00 kg (22.03 lb to 33.04 lb)

Power supply specifications

Depending on the installed options and/or the regional location where the server was purchased, the server is configured with one of the following power supplies:

- HPE 550 W Power Supply (PN 730941-B21)
- HPE 800 W/900 W Gold AC Power Input Module (PN 744689-B21)
- HPE 900 W AC/240 V DC Gold Power Input Module (PN 775595-B21)

For more information about the compatibility between the power input module and RPS backplane types, see **Power input module and RPS backplane characteristics**.

For more information about the power supply features, specifications, and compatibility, see the **Hewlett Packard Enterprise website**.

CAUTION:
Check the system and power supply input ratings before powering up the server.

Hot-plug power supply calculations

For hot-plug power supply specifications and calculators to determine electrical and heat loading for the server, see the **Hewlett Packard Enterprise Power Advisor website**.

Support and other resources

Accessing Hewlett Packard Enterprise Support

- For live assistance, go to the Contact Hewlett Packard Enterprise Worldwide website:

  http://www.hpe.com/assistance
- To access documentation and support services, go to the Hewlett Packard Enterprise Support Center website:

  http://www.hpe.com/support/hpesc

Information to collect

- Technical support registration number (if applicable)
- Product name, model or version, and serial number
- Operating system name and version
- Firmware version
- Error messages
- Product-specific reports and logs
- Add-on products or components
- Third-party products or components

Accessing updates

- Some software products provide a mechanism for accessing software updates through the product interface. Review your product documentation to identify the recommended software update method.
- To download product updates:

  Hewlett Packard Enterprise Support Center

  www.hpe.com/support/hpesc

  Hewlett Packard Enterprise Support Center: Software downloads

  www.hpe.com/support/downloads

  Software Depot

  www.hpe.com/support/softwaredepot
- To subscribe to eNewsletters and alerts:

  www.hpe.com/support/e-updates
- To view and update your entitlements, and to link your contracts and warranties with your profile, go to the Hewlett Packard Enterprise Support Center **More Information on Access to Support Materials** page:

  www.hpe.com/support/AccessToSupportMaterials

IMPORTANT:

Access to some updates might require product entitlement when accessed through the Hewlett Packard Enterprise Support Center. You must have an HPE Passport set up with relevant entitlements.

Customer self repair

Hewlett Packard Enterprise customer self repair (CSR) programs allow you to repair your product. If a CSR part needs to be replaced, it will be shipped directly to you so that you can install it at your convenience. Some parts do not qualify for CSR. Your Hewlett Packard Enterprise authorized service provider will determine whether a repair can be accomplished by CSR.

For more information about CSR, contact your local service provider or go to the CSR website:

http://www.hpe.com/support/selfrepair

Remote support

Remote support is available with supported devices as part of your warranty or contractual support agreement. It provides intelligent event diagnosis, and automatic, secure submission of hardware event notifications to Hewlett Packard Enterprise, which will initiate a fast and accurate resolution based on your product's service level. Hewlett Packard Enterprise strongly recommends that you register your device for remote support.

If your product includes additional remote support details, use search to locate that information.

Remote support and Proactive Care information

HPE Get Connected

www.hpe.com/services/getconnected

HPE Proactive Care services

www.hpe.com/services/proactivecare

HPE Proactive Care service: Supported products list

www.hpe.com/services/proactivecaresupportedproducts

HPE Proactive Care advanced service: Supported products list

www.hpe.com/services/proactivecareadvancedsupportedproducts

Proactive Care customer information

Proactive Care central

www.hpe.com/services/proactivecarecentral

Proactive Care service activation

www.hpe.com/services/proactivecarecentralgetstarted

Warranty information

To view the warranty for your product or to view the *Safety and Compliance Information for Server, Storage, Power, Networking, and Rack Products* reference document, go to the Enterprise Safety and Compliance website:

www.hpe.com/support/Safety-Compliance-EnterpriseProducts

Additional warranty information

HPE ProLiant and x86 Servers and Options

www.hpe.com/support/ProLiantServers-Warranties

HPE Enterprise Servers

www.hpe.com/support/EnterpriseServers-Warranties

HPE Storage Products

www.hpe.com/support/Storage-Warranties

HPE Networking Products

www.hpe.com/support/Networking-Warranties

Regulatory information

To view the regulatory information for your product, view the *Safety and Compliance Information for Server, Storage, Power, Networking, and Rack Products*, available at the Hewlett Packard Enterprise Support Center:

www.hpe.com/support/Safety-Compliance-EnterpriseProducts

Additional regulatory information

Hewlett Packard Enterprise is committed to providing our customers with information about the chemical substances in our products as needed to comply with legal requirements such as REACH (Regulation EC No 1907/2006 of the European Parliament and the Council). A chemical information report for this product can be found at:

www.hpe.com/info/reach

For Hewlett Packard Enterprise product environmental and safety information and compliance data, including RoHS and REACH, see:

www.hpe.com/info/ecodata

For Hewlett Packard Enterprise environmental information, including company programs, product recycling, and energy efficiency, see:

www.hpe.com/info/environment

Documentation feedback

Hewlett Packard Enterprise is committed to providing documentation that meets your needs. To help us improve the documentation, send any errors, suggestions, or comments to Documentation Feedback (**docsfeedback@hpe.com**). When submitting your feedback, include the document title, part number, edition, and publication date located on the front cover of the document. For online help content, include the product name, product version, help edition, and publication date located on the legal notices page.

Acronyms and abbreviations

ABEND

abnormal end

AMP

Advanced Memory Protection

ASR

Automatic Server Recovery

CSR

Customer Self Repair

FBWC

flash-backed write cache

GPU

GPU

HBA

host bus adapter

HPE SIM

HPE Systems Insight Manager

HPE SSA

HPE Smart Storage Administrator

iLO

Integrated Lights-Out

IML

Integrated Management Log

LFF

large form factor

LOM

Lights-Out Management

NMI

nonmaskable interrupt

NVRAM

nonvolatile memory

PCIe

Peripheral Component Interconnect Express

POST

Power-On Self-Test

QR code

quick response code

RBSU

ROM-Based Setup Utility

RPS

redundant power supply

SAS

serial attached SCSI

SATA

serial ATA

SD

Secure Digital

SFF

small form factor

SPP

Service Pack for ProLiant

SSD

solid-state device

SUV

serial, USB, video

TPM

Trusted Platform Module

UEFI

Unified Extensible Firmware Interface

UID

unit identification