Hewlett Packard Enterprise

HPE ProLiant BL460c Gen9 Server Blade
Maintenance and Service Guide

Abstract

This guide describes identification and maintenance procedures, diagnostic tools, specifications and requirements for hardware components and software. This guide is for an experienced service technician. Hewlett Packard Enterprise assumes you are qualified in the servicing of computer equipment, trained in recognizing hazards in products, and are familiar with weight and stability precautions.

Part Number: 768827-007
Published: August 2018
Edition: 7

© Copyright 2014, 2018 Hewlett Packard Enterprise Development LP

The information contained herein is subject to change without notice. The only warranties for Hewlett Packard Enterprise products and services are set forth in the express warranty statements accompanying such products and services. Nothing herein should be construed as constituting an additional warranty. Hewlett Packard Enterprise shall not be liable for technical or editorial errors or omissions contained herein.

Links to third-party websites take you outside the Hewlett Packad Enterprise website. Hewlett Packard Enterprise has no control over and is not responsible for information outside the Hewlett Packard Enterprise website.

Linux® is the registered trademark of Linus Torvalds in the U.S. and other countries.

Microsoft® and Windows® are either registered trademarks or trademarks of Microsoft Corporation in the United States and/or other countries.

microSD is a trademark or a registered trademark of SD-3C in the United States, other countries or both.

Red Hat® is a registered trademark of Red Hat, Inc. in the United States and other countries.

VMware® is a registered trademark or trademark of VMware, Inc. in the United States and/or other jurisdictions.

Contents

Customer self repair 5
Parts only warranty service 5
Illustrated parts catalog 15
Server blade components 15
Removal and replacement procedures 22
Required tools 22
Safety considerations 22
Preventing electrostatic discharge 22
Server blade warnings and cautions 22
Symbols on equipment 23
Server blade preparation 23
Power down the server blade 23
Remove the server blade 24
Install the server blade 25
Access panel 26
Drive blank 27
SAS/SATA drive 27
NVMe SSD 28
Enclosure connector cover 28
Direct connect SATA cable 29
Mezzanine assembly 30
Mezzanine options 31
FlexibleLOM 33
Storage controller/NVMe pass-through board 34
Heatsink blank 34
DIMM baffles 35
DIMMs 36
HPE Smart Storage Battery 37
Front panel/drive cage assembly 38
SAS/SATA or NVMe backplanes 39
System battery 40
Heatsink 41
Processor 43
System board with base pan 48
Server blade release lever kit 52
HPE Trusted Platform Module 56
Troubleshooting 57
Troubleshooting resources 57
Diagnostic tools 58
Product QuickSpecs 58
HPE iLO 58
Active Health System 58
iLO RESTful API support 58
Integrated Management Log 59
UEFI System Utilities 59
Using UEFI System Utilities 59
Embedded Diagnostics option 60
Re-entering the server serial number and product ID 60
Insight Diagnostics 60
Insight Diagnostics survey functionality 61
HPE Insight Remote Support 61

USB support 61
External USB functionality 62
HPE Smart Storage Administrator 62
Automatic Server Recovery 62
Component identification 64
Front panel components 64
Front panel LEDs and buttons 65
Front panel LED power fault codes 65
Serial label pull tab information 66
Drive numbering 66
Hot-plug drive LED definitions 67
NVMe SSD components 68
System board components 69
System maintenance switch 69
Mezzanine connector definitions 70
DIMM slot locations 70
DIMM identification 71
SUV cable connectors 72
Cabling 73
Cabling resources 73
HPE Smart Storage Battery cabling 73
Direct connect SATA cabling 73
Using the HPE c-Class Blade SUV Cable 74
Connecting locally to a server blade with video and USB devices 74
Accessing a server blade with local KVM 74
Accessing local media devices 75
Specifications 76
Environmental specifications 76
Server blade specifications 76
Acronyms and abbreviations 77
Documentation feedback 79
Index 80

Customer self repair

Hewlett Packard Enterprise products are designed with many Customer Self Repair (CSR) parts to minimize repair time and allow for greater flexibility in performing defective parts replacement. If during the diagnosis period Hewlett Packard Enterprise (or Hewlett Packard Enterprise service providers or service partners) identifies that the repair can be accomplished by the use of a CSR part, Hewlett Packard Enterprise will ship that part directly to you for replacement. There are two categories of CSR parts:

- **Mandatory**—Parts for which customer self repair is mandatory. If you request Hewlett Packard Enterprise to replace these parts, you will be charged for the travel and labor costs of this service.
- **Optional**—Parts for which customer self repair is optional. These parts are also designed for customer self repair. If, however, you require that Hewlett Packard Enterprise replace them for you, there may or may not be additional charges, depending on the type of warranty service designated for your product.

NOTE: Some Hewlett Packard Enterprise parts are not designed for customer self repair. In order to satisfy the customer warranty, Hewlett Packard Enterprise requires that an authorized service provider replace the part. These parts are identified as "No" in the Illustrated Parts Catalog.

Based on availability and where geography permits, CSR parts will be shipped for next business day delivery. Same day or four-hour delivery may be offered at an additional charge where geography permits. If assistance is required, you can call the Hewlett Packard Enterprise Support Center and a technician will help you over the telephone. Hewlett Packard Enterprise specifies in the materials shipped with a replacement CSR part whether a defective part must be returned to Hewlett Packard Enterprise. In cases where it is required to return the defective part to Hewlett Packard Enterprise, you must ship the defective part back to Hewlett Packard Enterprise within a defined period of time, normally five (5) business days. The defective part must be returned with the associated documentation in the provided shipping material. Failure to return the defective part may result in Hewlett Packard Enterprise billing you for the replacement. With a customer self repair, Hewlett Packard Enterprise will pay all shipping and part return costs and determine the courier/carrier to be used.

For more information about the Hewlett Packard Enterprise CSR program, contact your local service provider. For the North American program, go to the Hewlett Packard Enterprise CSR website (**http://www.hpe.com/support/selfrepair**).

Parts only warranty service

Your Hewlett Packard Enterprise Limited Warranty may include a parts only warranty service. Under the terms of parts only warranty service, Hewlett Packard Enterprise will provide replacement parts free of charge.

For parts only warranty service, CSR part replacement is mandatory. If you request Hewlett Packard Enterprise to replace these parts, you will be charged for the travel and labor costs of this service.

Réparation par le client (CSR)

Les produits Hewlett Packard Enterprise comportent de nombreuses pièces CSR (Customer Self Repair = réparation par le client) afin de minimiser les délais de réparation et faciliter le remplacement des pièces défectueuses. Si pendant la période de diagnostic, Hewlett Packard Enterprise (ou ses partenaires ou mainteneurs agréés) détermine que la réparation peut être effectuée à l'aide d'une pièce CSR, Hewlett Packard Enterprise vous l'envoie directement. Il existe deux catégories de pièces CSR :

- **Obligatoire—**Pièces pour lesquelles la réparation par le client est obligatoire. Si vous demandez à Hewlett Packard Enterprise de remplacer ces pièces, les coûts de déplacement et main d'œuvre du service vous seront facturés.
- **Facultatif—**Pièces pour lesquelles la réparation par le client est facultative. Ces pièces sont également conçues pour permettre au client d'effectuer lui-même la réparation. Toutefois, si vous demandez à Hewlett Packard Enterprise de remplacer ces pièces, l'intervention peut ou non vous être facturée, selon le type de garantie applicable à votre produit.

REMARQUE: Certaines pièces Hewlett Packard Enterprise ne sont pas conçues pour permettre au client d'effectuer lui-même la réparation. Pour que la garantie puisse s'appliquer, Hewlett Packard Enterprise exige que le remplacement de la pièce soit effectué par un Mainteneur Agréé. Ces pièces sont identifiées par la mention "Non" dans le Catalogue illustré.

Les pièces CSR sont livrées le jour ouvré suivant, dans la limite des stocks disponibles et selon votre situation géographique. Si votre situation géographique le permet et que vous demandez une livraison le jour même ou dans les 4 heures, celle-ci vous sera facturée. Pour toute assistance, appelez le Centre d’assistance Hewlett Packard Enterprise pour qu’un technicien vous aide au téléphone Dans les documents envoyés avec la pièce de rechange CSR, Hewlett Packard Enterprise précise s'il est nécessaire de lui retourner la pièce défectueuse. Si c'est le cas, vous devez le faire dans le délai indiqué, généralement cinq (5) jours ouvrés. La pièce et sa documentation doivent être retournées dans l'emballage fourni. Si vous ne retournez pas la pièce défectueuse, Hewlett Packard Enterprise se réserve le droit de vous facturer les coûts de remplacement. Dans le cas d'une pièce CSR, Hewlett Packard Enterprise supporte l'ensemble des frais d'expédition et de retour, et détermine la société de courses ou le transporteur à utiliser.

Pour plus d'informations sur le programme CSR de Hewlett Packard Enterprise, contactez votre Mainteneur Agrée local. Pour plus d'informations sur ce programme en Amérique du Nord, consultez le site Web Hewlett Packard Enterprise (**http://www.hpe.com/support/selfrepair**).

Service de garantie "pièces seules"

Votre garantie limitée Hewlett Packard Enterprise peut inclure un service de garantie "pièces seules". Dans ce cas, les pièces de rechange fournies par Hewlett Packard Enterprise ne sont pas facturées.

Dans le cadre de ce service, la réparation des pièces CSR par le client est obligatoire. Si vous demandez à Hewlett Packard Enterprise de remplacer ces pièces, les coûts de déplacement et main d'œuvre du service vous seront facturés.

Riparazione da parte del cliente

Per abbreviare i tempi di riparazione e garantire una maggiore flessibilità nella sostituzione di parti difettose, i prodotti Hewlett Packard Enterprise sono realizzati con numerosi componenti che possono essere riparati direttamente dal cliente (CSR, Customer Self Repair). Se in fase di diagnostica Hewlett Packard Enterprise (o un centro di servizi o di assistenza Hewlett Packard Enterprise) identifica il guasto come riparabile mediante un ricambio CSR, Hewlett Packard Enterprise lo spedirà direttamente al cliente per la sostituzione. Vi sono due categorie di parti CSR:

- **Obbligatorie—**Parti che devono essere necessariamente riparate dal cliente. Se il cliente ne affida la riparazione ad Hewlett Packard Enterprise, deve sostenere le spese di spedizione e di manodopera per il servizio.
- **Opzionali—**Parti la cui riparazione da parte del cliente è facoltativa. Si tratta comunque di componenti progettati per questo scopo. Se tuttavia il cliente ne richiede la sostituzione ad Hewlett Packard Enterprise, potrebbe dover sostenere spese addizionali a seconda del tipo di garanzia previsto per il prodotto.

NOTA: alcuni componenti Hewlett Packard Enterprise non sono progettati per la riparazione da parte del cliente. Per rispettare la garanzia, Hewlett Packard Enterprise richiede che queste parti siano sostituite da un centro di assistenza autorizzato. Tali parti sono identificate da un "No" nel Catalogo illustrato dei componenti.

In base alla disponibilità e alla località geografica, le parti CSR vengono spedite con consegna entro il giorno lavorativo seguente. La consegna nel giorno stesso o entro quattro ore è offerta con un supplemento di costo solo in alcune zone. In caso di necessità si può richiedere l'assistenza telefonica di un addetto del centro di supporto tecnico Hewlett Packard Enterprise. Nel materiale fornito con una parte di ricambio CSR, Hewlett Packard Enterprise specifica se il cliente deve restituire dei component. Qualora sia richiesta la resa ad Hewlett Packard Enterprise del componente difettoso, lo si deve spedire ad Hewlett Packard Enterprise entro un determinato periodo di tempo, generalmente cinque (5) giorni lavorativi. Il componente difettoso deve essere restituito con la documentazione associata nell'imballo di spedizione fornito. La mancata restituzione del componente può comportare la fatturazione del ricambio da parte di Hewlett Packard Enterprise. Nel caso di riparazione da parte del cliente, Hewlett Packard Enterprise sostiene tutte le spese di spedizione e resa e sceglie il corriere/vettore da utilizzare.

Per ulteriori informazioni sul programma CSR di Hewlett Packard Enterprise, contattare il centro di assistenza di zona. Per il programma in Nord America fare riferimento al sito Web (**http://www.hpe.com/support/selfrepair**).

Servizio di garanzia per i soli componenti

La garanzia limitata Hewlett Packard Enterprise può includere un servizio di garanzia per i soli componenti. Nei termini di garanzia del servizio per i soli componenti, Hewlett Packard Enterprise fornirà gratuitamente le parti di ricambio.

Per il servizio di garanzia per i soli componenti è obbligatoria la formula CSR che prevede la riparazione da parte del cliente. Se il cliente invece richiede la sostituzione ad Hewlett Packard Enterprise dovrà sostenere le spese di spedizione e di manodopera per il servizio.

Customer Self Repair

Hewlett Packard Enterprise Produkte enthalten viele CSR-Teile (Customer Self Repair), um Reparaturzeiten zu minimieren und höhere Flexibilität beim Austausch defekter Bauteile zu ermöglichen. Wenn Hewlett Packard Enterprise (oder ein Hewlett Packard Enterprise Servicepartner) bei der Diagnose feststellt, dass das Produkt mithilfe eines CSR-Teils repariert werden kann, sendet Ihnen Hewlett Packard Enterprise dieses Bauteil zum Austausch direkt zu. CSR-Teile werden in zwei Kategorien unterteilt:

- **Zwingend**—Teile, für die das Customer Self Repair-Verfahren zwingend vorgegeben ist. Wenn Sie den Austausch dieser Teile von Hewlett Packard Enterprise vornehmen lassen, werden Ihnen die Anfahrt- und Arbeitskosten für diesen Service berechnet.
- **Optional**—Teile, für die das Customer Self Repair-Verfahren optional ist. Diese Teile sind auch für Customer Self Repair ausgelegt. Wenn Sie jedoch den Austausch dieser Teile von Hewlett Packard Enterprise vornehmen lassen möchten, können bei diesem Service je nach den für Ihr Produkt vorgesehenen Garantiebedingungen zusätzliche Kosten anfallen.

HINWEIS: Einige Hewlett Packard Enterprise Teile sind nicht für Customer Self Repair ausgelegt. Um den Garantieanspruch des Kunden zu erfüllen, muss das Teil von einem Hewlett Packard Enterprise Servicepartner ersetzt werden. Im illustrierten Teilekatalog sind diese Teile mit „No“ bzw. „Nein“ gekennzeichnet.

CSR-Teile werden abhängig von der Verfügbarkeit und vom Lieferziel am folgenden Geschäftstag geliefert. Für bestimmte Standorte ist eine Lieferung am selben Tag oder innerhalb von vier Stunden gegen einen Aufpreis verfügbar. Wenn Sie Hilfe benötigen, können Sie das Hewlett Packard Enterprise

Support Center anrufen und sich von einem Mitarbeiter per Telefon helfen lassen. Den Materialien von Hewlett Packard Enterprise, die mit einem CSR-Ersatzteil geliefert werden, können Sie entnehmen, ob das defekte Teil an Hewlett Packard Enterprise zurückgeschickt werden muss. Wenn es erforderlich ist, das defekte Teil an Hewlett Packard Enterprise zurückzuschicken, müssen Sie dies innerhalb eines vorgegebenen Zeitraums tun, in der Regel innerhalb von fünf (5) Geschäftstagen. Das defekte Teil muss mit der zugehörigen Dokumentation in der Verpackung zurückgeschickt werden, die im Lieferumfang enthalten ist. Wenn Sie das defekte Teil nicht zurückschicken, kann Hewlett Packard Enterprise Ihnen das Ersatzteil in Rechnung stellen. Im Falle von Customer Self Repair kommt Hewlett Packard Enterprise für alle Kosten für die Lieferung und Rücksendung auf und bestimmt den Kurier-/Frachtdienst.

Weitere Informationen über das Hewlett Packard Enterprise Customer Self Repair Programm erhalten Sie von Ihrem Servicepartner vor Ort. Informationen über das CSR-Programm in Nordamerika finden Sie auf der Hewlett Packard Enterprise Website unter (**http://www.hpe.com/support/selfrepair**).

Parts-only Warranty Service (Garantieservice ausschließlich für Teile)

Ihre Hewlett Packard Enterprise Garantie umfasst möglicherweise einen Parts-only Warranty Service (Garantieservice ausschließlich für Teile). Gemäß den Bestimmungen des Parts-only Warranty Service stellt Hewlett Packard Enterprise Ersatzteile kostenlos zur Verfügung.

Für den Parts-only Warranty Service ist das CSR-Verfahren zwingend vorgegeben. Wenn Sie den Austausch dieser Teile von Hewlett Packard Enterprise vornehmen lassen, werden Ihnen die Anfahrt- und Arbeitskosten für diesen Service berechnet.

Reparaciones del propio cliente

Los productos de Hewlett Packard Enterprise incluyen muchos componentes que el propio usuario puede reemplazar (Customer Self Repair, CSR) para minimizar el tiempo de reparación y ofrecer una mayor flexibilidad a la hora de realizar sustituciones de componentes defectuosos. Si, durante la fase de diagnóstico, Hewlett Packard Enterprise (o los proveedores o socios de servicio de Hewlett Packard Enterprise) identifica que una reparación puede llevarse a cabo mediante el uso de un componente CSR, Hewlett Packard Enterprise le enviará dicho componente directamente para que realice su sustitución. Los componentes CSR se clasifican en dos categorías:

- **Obligatorio**—Componentes cuya reparación por parte del usuario es obligatoria. Si solicita a Hewlett Packard Enterprise que realice la sustitución de estos componentes, tendrá que hacerse cargo de los gastos de desplazamiento y de mano de obra de dicho servicio.
- **Opcional**—Componentes cuya reparación por parte del usuario es opcional. Estos componentes también están diseñados para que puedan ser reparados por el usuario. Sin embargo, si precisa que Hewlett Packard Enterprise realice su sustitución, puede o no conllevar costes adicionales, dependiendo del tipo de servicio de garantía correspondiente al producto.

NOTA: Algunos componentes de Hewlett Packard Enterprise no están diseñados para que puedan ser reparados por el usuario. Para que el usuario haga valer su garantía, Hewlett Packard Enterprise pone como condición que un proveedor de servicios autorizado realice la sustitución de estos componentes. Dichos componentes se identifican con la palabra "No" en el catálogo ilustrado de componentes.

Según la disponibilidad y la situación geográfica, los componentes CSR se enviarán para que lleguen a su destino al siguiente día laborable. Si la situación geográfica lo permite, se puede solicitar la entrega en el mismo día o en cuatro horas con un coste adicional. Si precisa asistencia técnica, puede llamar al Centro de asistencia técnica de Hewlett Packard Enterprise y recibirá ayuda telefónica por parte de un técnico. Con el envío de materiales para la sustitución de componentes CSR, Hewlett Packard Enterprise especificará si los componentes defectuosos deberán devolverse a Hewlett Packard Enterprise. En aquellos casos en los que sea necesario devolver algún componente a Hewlett Packard Enterprise,

deberá hacerlo en el periodo de tiempo especificado, normalmente cinco días laborables. Los componentes defectuosos deberán devolverse con toda la documentación relacionada y con el embalaje de envío. Si no enviara el componente defectuoso requerido, Hewlett Packard Enterprise podrá cobrarle por el de sustitución. En el caso de todas sustituciones que lleve a cabo el cliente, Hewlett Packard Enterprise se hará cargo de todos los gastos de envío y devolución de componentes y escogerá la empresa de transporte que se utilice para dicho servicio.

Para obtener más información acerca del programa de Reparaciones del propio cliente de Hewlett Packard Enterprise, póngase en contacto con su proveedor de servicios local. Si está interesado en el programa para Norteamérica, visite la página web de Hewlett Packard Enterprise CSR (**http://www.hpe.com/support/selfrepair**).

Servicio de garantía exclusivo de componentes

La garantía limitada de Hewlett Packard Enterprise puede que incluya un servicio de garantía exclusivo de componentes. Según las condiciones de este servicio exclusivo de componentes, Hewlett Packard Enterprise le facilitará los componentes de repuesto sin cargo adicional alguno.

Para este servicio de garantía exclusivo de componentes, es obligatoria la sustitución de componentes por parte del usuario (CSR). Si solicita a Hewlett Packard Enterprise que realice la sustitución de estos componentes, tendrá que hacerse cargo de los gastos de desplazamiento y de mano de obra de dicho servicio.

Customer Self Repair

Veel onderdelen in Hewlett Packard Enterprise producten zijn door de klant zelf te repareren, waardoor de reparatieduur tot een minimum beperkt kan blijven en de flexibiliteit in het vervangen van defecte onderdelen groter is. Deze onderdelen worden CSR-onderdelen (Customer Self Repair) genoemd. Als Hewlett Packard Enterprise (of een Hewlett Packard Enterprise Service Partner) bij de diagnose vaststelt dat de reparatie kan worden uitgevoerd met een CSR-onderdeel, verzendt Hewlett Packard Enterprise dat onderdeel rechtstreeks naar u, zodat u het defecte onderdeel daarmee kunt vervangen. Er zijn twee categorieën CSR-onderdelen:

- **Verplicht**—Onderdelen waarvoor reparatie door de klant verplicht is. Als u Hewlett Packard Enterprise verzoekt deze onderdelen voor u te vervangen, worden u voor deze service reiskosten en arbeidsloon in rekening gebracht.
- **Optioneel**—Onderdelen waarvoor reparatie door de klant optioneel is. Ook deze onderdelen zijn ontworpen voor reparatie door de klant. Als u echter Hewlett Packard Enterprise verzoekt deze onderdelen voor u te vervangen, kunnen daarvoor extra kosten in rekening worden gebracht, afhankelijk van het type garantieservice voor het product.

OPMERKING: Sommige Hewlett Packard Enterprise onderdelen zijn niet ontwikkeld voor reparatie door de klant. In verband met de garantievoorwaarden moet het onderdeel door een geautoriseerde Service Partner worden vervangen. Deze onderdelen worden in de geïllustreerde onderdelencatalogus aangemerkt met "Nee".

Afhankelijk van de leverbaarheid en de locatie worden CSR-onderdelen verzonden voor levering op de eerstvolgende werkdag. Levering op dezelfde dag of binnen vier uur kan tegen meerkosten worden aangeboden, indien dit mogelijk is gezien de locatie. Indien assistentie is gewenst, belt u het Hewlett Packard Enterprise Support Center om via de telefoon ondersteuning van een technicus te ontvangen. Hewlett Packard Enterprise vermeldt in de documentatie bij het vervangende CSR-onderdeel of het defecte onderdeel aan Hewlett Packard Enterprise moet worden geretourneerd. Als het defecte onderdeel aan Hewlett Packard Enterprise moet worden teruggezonden, moet u het defecte onderdeel binnen een bepaalde periode, gewoonlijk vijf (5) werkdagen, retourneren aan Hewlett Packard Enterprise. Het defecte onderdeel moet met de bijbehorende documentatie worden geretourneerd in het meegeleverde verpakkingsmateriaal. Als u het defecte onderdeel niet terugzendt, kan Hewlett Packard

Enterprise u voor het vervangende onderdeel kosten in rekening brengen. Bij reparatie door de klant betaalt Hewlett Packard Enterprise alle verzendkosten voor het vervangende en geretourneerde onderdeel en kiest Hewlett Packard Enterprise zelf welke koerier/transportonderneming hiervoor wordt gebruikt.

Neem contact op met een Service Partner voor meer informatie over het Customer Self Repair programma van Hewlett Packard Enterprise. Informatie over Service Partners vindt u op de Hewlett Packard Enterprise website (**http://www.hpe.com/support/selfrepair**).

Garantieservice "Parts Only"

Het is mogelijk dat de Hewlett Packard Enterprise garantie alleen de garantieservice "Parts Only" omvat. Volgens de bepalingen van de Parts Only garantieservice zal Hewlett Packard Enterprise kosteloos vervangende onderdelen ter beschikking stellen.

Voor de Parts Only garantieservice is vervanging door CSR-onderdelen verplicht. Als u Hewlett Packard Enterprise verzoekt deze onderdelen voor u te vervangen, worden u voor deze service reiskosten en arbeidsloon in rekening gebracht

Reparo feito pelo cliente

Os produtos da Hewlett Packard Enterprise são projetados com muitas peças para reparo feito pelo cliente (CSR) de modo a minimizar o tempo de reparo e permitir maior flexibilidade na substituição de peças com defeito. Se, durante o período de diagnóstico, a Hewlett Packard Enterprise (ou fornecedores/parceiros da Hewlett Packard Enterprise) concluir que o reparo pode ser efetuado pelo uso de uma peça CSR, a Hewlett Packard Enterprise enviará a peça diretamente ao cliente. Há duas categorias de peças CSR:

- **Obrigatória**—Peças cujo reparo feito pelo cliente é obrigatório. Se desejar que a Hewlett Packard Enterprise substitua essas peças, serão cobradas as despesas de transporte e mão-de-obra do serviço.
- **Opcional**—Peças cujo reparo feito pelo cliente é opcional. Essas peças também são projetadas para o reparo feito pelo cliente. No entanto, se desejar que a Hewlett Packard Enterprise as substitua, pode haver ou não a cobrança de taxa adicional, dependendo do tipo de serviço de garantia destinado ao produto.

OBSERVAÇÃO: Algumas peças da Hewlett Packard Enterprise não são projetadas para o reparo feito pelo cliente. A fim de cumprir a garantia do cliente, a Hewlett Packard Enterprise exige que um técnico autorizado substitua a peça. Essas peças estão identificadas com a marca "No" (Não), no catálogo de peças ilustrado.

Conforme a disponibilidade e o local geográfico, as peças CSR serão enviadas no primeiro dia útil após o pedido. Onde as condições geográficas permitirem, a entrega no mesmo dia ou em quatro horas pode ser feita mediante uma taxa adicional. Se precisar de auxílio, entre em contato com o Centro de suporte técnico da Hewlett Packard Enterprise para que um técnico o ajude por telefone. A Hewlett Packard Enterprise especifica nos materiais fornecidos com a peça CSR de reposição se a peça com defeito deve ser devolvida à Hewlett Packard Enterprise. Nos casos em que isso for necessário, é preciso enviar a peça com defeito à Hewlett Packard Enterprise, você deverá enviar a peça com defeito de volta para a Hewlett Packard Enterprise dentro do período de tempo definido, normalmente em 5 (cinco) dias úteis. A peça com defeito deve ser enviada com a documentação correspondente no material de transporte fornecido. Caso não o faça, a Hewlett Packard Enterprise poderá cobrar a reposição. Para as peças de reparo feito pelo cliente, a Hewlett Packard Enterprise paga todas as despesas de transporte e de devolução da peça e determina a transportadora/serviço postal a ser utilizado.

Para obter mais informações sobre o programa de reparo feito pelo cliente da Hewlett Packard Enterprise, entre em contato com o fornecedor de serviços local. Para o programa norte-americano, visite o site da Hewlett Packard Enterprise (**http://www.hpe.com/support/selfrepair**).

Serviço de garantia apenas para peças

A garantia limitada da Hewlett Packard Enterprise pode incluir um serviço de garantia apenas para peças. Segundo os termos do serviço de garantia apenas para peças, a Hewlett Packard Enterprise fornece as peças de reposição sem cobrar nenhuma taxa.

No caso desse serviço, a substituição de peças CSR é obrigatória. Se desejar que a Hewlett Packard Enterprise substitua essas peças, serão cobradas as despesas de transporte e mão-de-obra do serviço.

カスタマーセルフリペア

修理時間を短縮し、故障部品の交換における高い柔軟性を確保するために、Hewlett Packard Enterprise製品には多数のカスタマーセルフリペア（CSR）部品があります。診断の際に、CSR部品を使用すれば修理ができるとHewlett Packard Enterprise（Hewlett Packard EnterpriseまたはHewlett Packard Enterprise正規保守代理店）が判断した場合、Hewlett Packard Enterpriseはその部品を直接、お客様に発送し、お客様に交換していただきます。CSR部品には以下の2種類があります。

- **必須 -** カスタマーセルフリペアが必須の部品。当該部品について、もしもお客様がHewlett Packard Enterpriseに交換作業を依頼される場合には、その修理サービスに関する交通費および人件費がお客様に請求されます。
- **任意 -** カスタマーセルフリペアが任意である部品。この部品もカスタマーセルフリペア用です。当該部品について、もしもお客様がHewlett Packard Enterpriseに交換作業を依頼される場合には、お買い上げの製品に適用される保証サービス内容の範囲内においては、別途費用を負担していただくことなく保証サービスを受けることができます。

注：Hewlett Packard Enterprise製品の一部の部品は、カスタマーセルフリペアの対象外です。製品の保証を継続するためには、Hewlett Packard EnterpriseまたはHewlett Packard Enterprise正規保守代理店による交換作業が必須となります。部品カタログには、当該部品がカスタマーセルフリペア除外品である旨が記載されています。

部品供給が可能な場合、地域によっては、CSR部品を翌営業日に届くように発送します。また、地域によっては、追加費用を負担いただくことにより同日または4時間以内に届くように発送することも可能な場合があります。サポートが必要なときは、Hewlett Packard Enterpriseサポートセンターに電話していただければ、技術者が電話でアドバイスします。交換用のCSR部品または同梱物には、故障部品をHewlett Packard Enterpriseに返送する必要があるかどうかが表示されています。故障部品をHewlett Packard Enterpriseに返送する必要がある場合は、指定期限内（通常は5営業日以内）に故障部品をHewlett Packard Enterpriseに返送してください。故障部品を返送する場合は、届いた時の梱包箱に関連書類とともに入れてください。故障部品を返送しない場合、Hewlett Packard Enterpriseから部品費用が請求されます。カスタマーセルフリペアの際には、Hewlett Packard Enterpriseは送料および部品返送費を全額負担し、使用する宅配便会社や運送会社を指定します。

部品のみ保証サービス

Hewlett Packard Enterprise保証サービスには、部品のみ保証サービスが適用される場合があります。このサービスでは、交換部品は無償で提供されます。

部品のみ保証サービスにおいては、CSR部品をお客様により交換作業していただくことが必須になります。当該部品について、もしもお客様がHewlett Packard Enterpriseに交換作業を依頼される場合には、その修理サービスに関する交通費および人件費がお客様のご負担となります。

客户自行维修

Hewlett Packard Enterprise 产品提供许多客户自行维修 (CSR) 部件，以尽可能缩短维修时间和在更换缺陷部件方面提供更大的灵活性。如果在诊断期间 Hewlett Packard Enterprise（或Hewlett Packard Enterprise 服务提供商或服务合作伙伴）确定可以通过使用 CSR 部件完成维修，Hewlett Packard Enterprise 将直接把该部件发送给您进行更换。有两类 CSR 部件：

- **强制性的** — 要求客户必须自行维修的部件。如果您请求 Hewlett Packard Enterprise 更换这些部件，则必须为该服务支付差旅费和人工费用。
- **可选的** — 客户可以选择是否自行维修的部件。这些部件也是为客户自行维修设计的。不过，如果您要求 Hewlett Packard Enterprise 为您更换这些部件，则根据为您的产品指定的保修服务类型，Hewlett Packard Enterprise 可能收取或不再收取任何附加费用。

注：某些 Hewlett Packard Enterprise 部件的设计并未考虑客户自行维修。为了满足客户保修的需要，Hewlett Packard Enterprise 要求授权服务提供商更换相关部件。这些部件在部件图解目录中标记为“否”。

CSR 部件将在下一个工作日发运（取决于备货情况和允许的地理范围）。在允许的地理范围内，可在当天或四小时内发运，但要收取额外费用。如果需要帮助，您可以致电 Hewlett Packard Enterprise 技术支持中心，将会有技术人员通过电话为您提供帮助。Hewlett Packard Enterprise 会在随更换的 CSR 部件发运的材料中指明是否必须将有缺陷的部件返还给 Hewlett Packard Enterprise。如果要求您将有缺陷的部件返还给 Hewlett Packard Enterprise，那么您必须在规定的期限内（通常是五 (5) 个工作日）将缺陷部件发给 Hewlett Packard Enterprise。有缺陷的部件必须随所提供的发运材料中的相关文件一起返还。如果未能送还有缺陷的部件，Hewlett Packard Enterprise 可能会要求您支付更换费用。客户自行维修时，Hewlett Packard Enterprise 将承担所有相关运输和部件返回费用，并指定快递商/承运商。

有关 Hewlett Packard Enterprise 客户自行维修计划的详细信息，请与您当地的服务提供商联系。有关北美地区的计划，请访问 Hewlett Packard Enterprise 网站 (http://www.hpe.com/support/selfrepair)。

仅部件保修服务

您的 Hewlett Packard Enterprise 有限保修服务可能涉及仅部件保修服务。根据仅部件保修服务条款的规定，Hewlett Packard Enterprise 将免费提供更换的部件。

仅部件保修服务要求进行 CSR 部件更换。如果您请求 Hewlett Packard Enterprise 更换这些部件，则必须为该服务支付差旅费和人工费用。

客戶自行維修

Hewlett Packard Enterprise 產品設計了許多「客戶自行維修」(CSR) 的零件以減少維修時間，並且使得更換瑕疵零件時能有更大的彈性。如果在診斷期間，Hewlett Packard Enterprise (或 Hewlett Packard Enterprise 服務供應商或維修夥伴) 辨認出此項維修工作可以藉由使用 CSR 零件來完成，則 Hewlett Packard Enterprise 將直接寄送該零件給您作更換。CSR 零件分為兩種類別：

- **強制的** — 客戶自行維修所使用的零件是強制性的。如果您要求 Hewlett Packard Enterprise 更換這些零件，Hewlett Packard Enterprise 將會向您收取此服務所需的外出費用與勞動成本。
- **選購的** — 客戶自行維修所使用的零件是選購的。這些零件也設計用於客戶自行維修之用。不過，如果您要求 Hewlett Packard Enterprise 為您更換，則可能需要也可能不需要負擔額外的費用，端視針對此產品指定的保固服務類型而定。

備註：某些 Hewlett Packard Enterprise 零件沒有消費者可自行維修的設計。為符合客戶保固，Hewlett Packard Enterprise 需要授權的服務供應商更換零件。這些零件在圖示的零件目錄中，被標示為「否」。

基於材料取得及環境允許的情況下，CSR 零件將於下一個工作日以快遞寄送。在環境的允許下當天或四小時內送達，則可能需要額外的費用。若您需要協助，可致電 Hewlett Packard Enterprise 支援中心，會有一位技術人員透過電話來協助您。不論損壞的零件是否必須退回，Hewlett Packard Enterprise 皆會在與 CSR 替換零件一起運送的材料中註明。若要將損壞的零件退回 Hewlett Packard Enterprise，您必須在指定的一段時間內 (通常為五 (5) 個工作天)，將損壞的零件寄回 Hewlett Packard Enterprise。損壞的零件必須與寄送資料中隨附的相關技術文件一併退還。如果無法退還損壞的零件，Hewlett Packard Enterprise 可能要向您收取替換費用。針對客戶自行維修情形，Hewlett Packard Enterprise 將負責所有運費及零件退還費用，並指定使用何家快遞/貨運公司。

如需 Hewlett Packard Enterprise 的 CSR 方案詳細資訊，請連絡您當地的服務供應商。至於北美方案，請參閱 Hewlett Packard Enterprise 的 CSR 網站frepair (http://www.hpe.com/support/selfrepair)。

僅限零件的保固服務

您的「Hewlett Packard Enterprise 有限保固」可能包含僅限零件的保固服務。在僅限零件的保固服務情況下，Hewlett Packard Enterprise 將免費提供替換零件。

針對僅限零件的保固服務，CSR 零件替換是強制性的。如果您要求 Hewlett Packard Enterprise 更換這些零件，Hewlett Packard Enterprise 將會向您收取此服務所需的外出費用與勞動成本。

고객 셀프 수리

Hewlett Packard Enterprise 제품은 수리 시간을 최소화하고 결함이 있는 부품 교체 시 더욱 융통성을 발휘할 수 있도록 하기 위해 고객 셀프 수리(CSR) 부품을 다량 사용하여 설계되었습니다. 진단 기간 동안 Hewlett Packard Enterprise(또는 Hewlett Packard Enterprise 서비스 공급업체 또는 서비스 협력업체)에서 CSR 부품을 사용하여 수리가 가능하다고 판단되면 Hewlett Packard Enterprise는 해당 부품을 바로 사용자에게 보내어 사용자가 교체할 수 있도록 합니다. CSR 부품에는 두 가지 종류가 있습니다.

- **필수 -** 고객 셀프 수리가 의무 사항인 필수 부품. 사용자가 Hewlett Packard Enterprise에 이 부품의 교체를 요청할 경우 이 서비스에 대한 출장비 및 작업비가 청구됩니다.
- **선택 사항 -** 고객 셀프 수리가 선택 사항인 부품. 이 부품들도 고객 셀프 수리가 가능하도록 설계되었습니다. 하지만 사용자가 Hewlett Packard Enterprise에 이 부품의 교체를 요청할 경우 사용자가 구입한 제품에 해당하는 보증 서비스 유형에 따라 추가 비용 없이 교체가 가능할 수 있습니다.

참고: 일부 Hewlett Packard Enterprise 부품은 고객 셀프 수리가 불가능하도록 설계되었습니다. Hewlett Packard Enterprise는 만족스러운 고객 보증을 위해 공인 서비스 제공업체를 통해 부품을 교체하도록 하고 있습니다. 이러한 부품들은 Illustrated Parts Catalog에 "No"라고 표시되어 있습니다.

CSR 부품은 재고 상태와 지리적 조건이 허용하는 경우 다음 영업일 납품이 가능하도록 배송이 이루어집니다. 지리적 조건이 허용하는 경우 추가 비용이 청구되는 조건으로 당일 또는 4시간 배송이 가능할 수도 있습니다. 도움이 필요하시면 Hewlett Packard Enterprise Support Center로 전화하십시오. 전문 기술자가 전화로 도움을 줄 것입니다. Hewlett Packard Enterprise는 결함이 발생한 부품을 Hewlett Packard Enterprise로 반환해야 하는지 여부를 CSR 교체 부품과 함께 배송된 자료에 지정합니다. 결함이 발생한 부품을 Hewlett Packard Enterprise로 반환해야 하는 경우에는 지정된 기간 내(통상 영업일 기준 5일)에 Hewlett Packard Enterprise로 반환해야 합니다. 이때 결함이 발생한 부품은 제공된 포장 재료에 넣어 관련 설명서와 함께 반환해야 합니다. 결함이 발생한 부품을 반환하지 않는 경우 Hewlett Packard Enterprise가 교체 부품에 대해 비용을 청구할 수 있습니다. 고객 셀프 수리의 경우, Hewlett Packard Enterprise는 모든 운송 및 부품 반환 비용을 부담하며 이용할 운송업체 및 택배 서비스를 결정합니다.

Hewlett Packard Enterprise CSR 프로그램에 대한 자세한 내용은 가까운 서비스 제공업체에 문의하십시오. 북미 지역의 프로그램에 대해서는 Hewlett Packard Enterprise CSR 웹 사이트(http://www.hpe.com/support/selfrepair)를 참조하십시오.

부품 제공 보증 서비스

Hewlett Packard Enterprise 제한 보증에는 부품 제공 보증 서비스가 포함될 수 있습니다. 이러한 경우 Hewlett Packard Enterprise는 부품 제공 보증 서비스의 조건에 따라 교체 부품만을 무료로 제공합니다.

부품 제공 보증 서비스 제공 시 CSR 부품 교체는 의무 사항입니다. 사용자가 Hewlett Packard Enterprise에 이 부품의 교체를 요청할 경우 이 서비스에 대한 출장비 및 작업비가 청구됩니다.

Illustrated parts catalog

Server blade components

Hewlett Packard Enterprise continually improves and changes product parts. For complete and current supported parts information, see the Hewlett Packard Enterprise PartSurfer website (**http://www.hpe.com/info/partssurfer**).

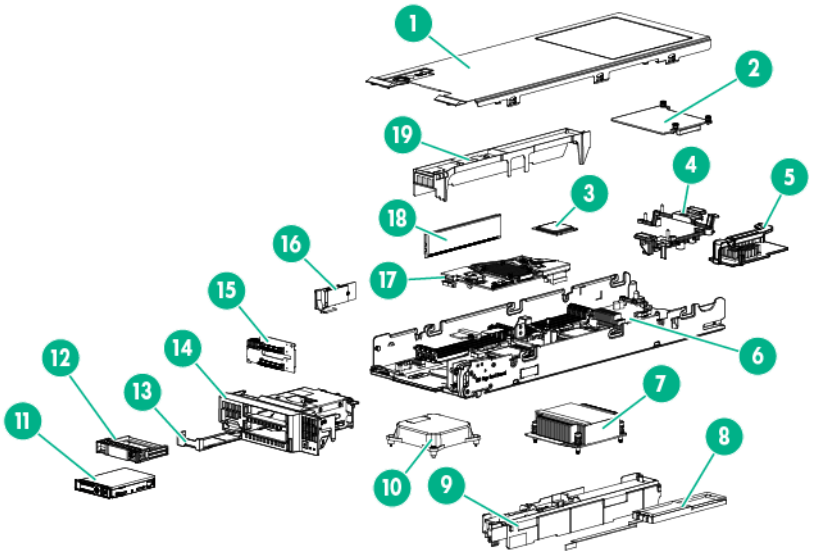

Item	Description	Spare part number	Customer self repair (on page 5)
1	Access panel	777681-001	Mandatory1
2	Mezzanine options	—	—
	a) HPE FlexFabric 20Gb 2-port 630M Adapter	701528-001	Mandatory1
	b) HPE FlexFabric 20Gb 2-port 650M Adapter*	701535-001	Mandatory1
	c) HPE FlexFabric 10Gb 2-port 534M Adapter*	701530-001	Mandatory1
	d) HPE Ethernet 10Gb 2-port 560M Adapter*	669282-001	Mandatory1
	e) HPE Ethernet 10Gb 2-port 570M Adapter*	730700-001	Mandatory[1]
	f) HPE Ethernet 1Gb 4-port 366M Adapter*	616010-001	Mandatory[1]
	g) HPE InfiniBand QDR/Ethernet 10Gb 2-port 544+M Adapter*	764734-001	Mandatory[1]
	h) HPE InfiniBand FDR/Ethernet 10Gb/40Gb 2-port 544+M Adapter*	764735-001	Mandatory[1]
	i) HPE InfiniBand FDR 2-port 545M Adapter*	705086-001	Mandatory[1]
	j) HPE LPe1605 16Gb Fibre Channel HBA for BladeSystem c-Class*	718577-001	Mandatory[1]
	k) HPE LPe1205A 8Gb Fibre Channel Host Bus Adapter*	662538-001	Mandatory[1]
	l) HPE QMH2672 16Gb Fibre Channel Host Bus Adapter*	711305-001	Mandatory[1]

Item	Description	Spare part number	Customer self repair (on page 5)
	m) HPE QMH2572 8Gb Fibre Channel Host Bus Adapter*	656452-001	Mandatory[1]
3	Processors	—	—
	Intel Xeon E5-2600 v3 processors	—	—
	a) 1.60-GHz Intel Xeon E5-2603 v3**	762441-001	Optional[2]
	b) 1.90-GHz Intel Xeon E5-2609 v3* **	762443-001	Optional[2]
	c) 2.40-GHz Intel Xeon E5-2620 v3* **	762445-001	Optional[2]
	d) 3.00-GHz Intel Xeon E5-2623 v3* **	780762-001	Optional[2]
	e) 2.40-GHz Intel Xeon E5-2630 v3* **	762446-001	Optional[2]
	f) 1.80-GHz Intel Xeon E5-2630L v3* **	762459-001	Optional[2]
	g) 3.50-GHz Intel Xeon E5-2637 v3* **	762455-001	Optional[2]
	h) 2.60-GHz Intel Xeon E5-2640 v3* **	762447-001	Optional[2]
	i) 3.40-GHz Intel Xeon E5-2643 v3* **	762456-001	Optional[2]
	j) 2.30-GHz Intel Xeon E5-2650 v3* **	762448-001	Optional[2]
	k) 1.80-GHz Intel Xeon E5-2650L v3* **	762461-001	Optional[2]
	l) 2.60-GHz Intel Xeon E5-2660 v3* **	762449-001	Optional[2]
	m) 3.20-GHz Intel Xeon E5-2667 v3* **	762457-001	Optional[2]
	n) 2.30-GHz Intel Xeon E5-2670 v3* **	762450-001	Optional[2]
	o) 2.50-GHz Intel Xeon E5-2680 v3* **	762451-001	Optional[2]
	p) 2.00-GHz Intel Xeon E5-2683 v3* **	762453-001	Optional[2]
	q) 2.60-GHz Intel Xeon E5-2685v3* **	780759-001	Optional[2]
	r) 2.60-GHz Intel Xeon E5-2690 v3* **	762452-001	Optional[2]
	s) 2.30-GHz Intel Xeon E5-2695 v3* **	762454-001	Optional[2]
	t) 2.60-GHz Intel Xeon E5-2697 v3* **	765154-001	Optional[2]
	u) 2.30-GHz Intel Xeon E5-2698 v3* **	780760-002	Optional[2]
	v) 2.30-GHz Intel Xeon E5-2699 v3* **	780761-001	Optional[2]
	Intel Xeon E5-2600 v4 processors	—	—
	a) 1.7-GHz Intel Xeon E5-2603 v4, 6C, 85W* **	835599-001	Optional2
	b) 1.7-GHz Intel Xeon E5-2609 v4, 8C, 85W* **	835600-001	Optional2
	c) 1.7-GHz Intel Xeon E5-2620 v4, 8C, 85W* **	835601-001	Optional2
	d) 2.2-GHz Intel Xeon E5-2630 v4, 10C, 85W* **	835602-001	Optional2
	e) 2.4-GHz Intel Xeon E5-2640 v4, 10C, 90W* **	835603-001	Optional2
	f) 2.2-GHz Intel Xeon E5-2650 v4, 12C, 105W* **	835604-001	Optional2
	g) 2.0-GHz Intel Xeon E5-2660 v4, 14C, 105W* **	835605-001	Optional2

Item	Description	Spare part number	Customer self repair (on page 5)
	h) 2.3-GHz Intel Xeon E5-2680 v4, 14C, 120W* **	835606-001	Optional2
	i) 2.2-GHz Intel Xeon E5-2690 v4, 14C or 16C* **	835607-001	Optional2
	j) 1.7-GHz Intel Xeon E5-2630L v4, 10C, 55W* **	835608-001	Optional2
	k) 1.5-GHz Intel Xeon E5-2650L v4, 14C, 65W* **	835609-001	Optional2
	l) 2.6-GHz Intel Xeon E5-2623 v4, 4C, 85W* **	835610-001	Optional2
	m) 3.4-GHz Intel Xeon E5-2637 v4, 4C, 135W* **	835611-001	Optional2
	n) 3.2-GHz Intel Xeon E5-2643 v4, 6C* **	835612-001	Optional2
	o) 2.9-GHz Intel Xeon E5-2667 v4, 8C* **	835613-001	Optional2
	p) 2.1-GHz Intel Xeon E5-2683 v4, 16C, 120W* **	835614-001	Optional2
	q) 2.1-GHz Intel Xeon E5-2695 v4, 18C, 120W* **	835615-001	Optional2
	r) 2.3-GHz Intel Xeon E5-2697 v4, 18C, 145W* **	835616-001	Optional2
	s) 2.1-GHz Intel Xeon E5-2698 v4, 20C, 135W* **	835617-001	Optional2
	t) 2.2-GHz Intel Xeon E5-2699 v4, 22C, 145W* **	835618-001	Optional2
	u) 2.6-GHz Intel Xeon E5-2697A v4, 16C, 145W* **	841035-001	Optional2
4	Mezzanine assembly	784960-001	Optional2
5	FlexibleLOM adapters	—	—
	a) HPE FlexFabric 20Gb 2-port 630FLB Adapter	701527-001	Mandatory1
	b) HPE FlexFabric 20Gb 2-port 650FLB Adapter*	701536-001	Mandatory1
	c) HPE FlexFabric 10Gb 2-port 536FLB Adapter*	768080-001	Mandatory1
	d) HPE Ethernet 10Gb 2-port 560FLB Adapter*	730701-001	Mandatory1
	e) HPE Ethernet 10Gb 2-port 570FLB Adapter*	701528-001	Mandatory1
6	System board with base pan	843305-001	Optional2
7	Heatsink	—	—
	a) Processor 1 heatsink, standard	777687-001	Optional2
	b) Processor 2 heatsink, standard*	777686-001	Optional2
	c) Processor 1 heatsink, wide*	777689-001	Optional2
	d) Processor 2 heatsink, wide*	777688-001	Optional2
8	Smart Storage Battery with cable	750452-001	Mandatory1
9	DIMM baffle, right	777685-001	Mandatory[1]
10	Heatsink blank	862026-001	Mandatory[1]
11	Drives	—	—
	SAS/SATA drives	—	—
	a) 146-GB, hard drive, SAS, SFF, 15,000-rpm, 6G	653950-001	Mandatory[1]
	b) 300-GB, hard drive, SAS, SFF, 10,000-rpm, 6G*	653955-001	Mandatory[1]
	c) 450-GB, hard drive, SAS, SFF, 10,000-rpm, 6G*	653956-001	Mandatory[1]
	d) 500-GB, hard drive, SAS, SFF, 7,200-rpm, 6G*	653953-001	Mandatory[1]
	e) 600-GB, hard drive, SAS, SFF, 10,000-rpm, 6G*	653957-001	Mandatory[1]

Item	Description	Spare part number	Customer self repair (on page 5)
	f) 900-GB, hard drive, SAS, SFF, 10,000-rpm, 6G*	653971-001	Mandatory[1]
	g) 1-TB, hard drive, SAS, SFF, 7,200-rpm, 6G*	653954-001	Mandatory[1]
	h) 1.2-TB, hard drive, SAS, SFF, 10,000-rpm, 6G*	718292-001	Mandatory[1]
	i) 200-GB, SSD, SAS, ME, SFF, 12G*	741224-001	Mandatory[1]
	j) 200-GB, SSD, SAS, HE, SFF, 12G*	741230-001	Mandatory[1]
	k) 400-GB, SSD, SAS, ME, SFF, 12G*	741226-001	Mandatory[1]
	l) 400-GB, SSD, SAS, HE, SFF, 12G*	741232-001	Mandatory[1]
	m) 800-GB, SSD, SAS, VE, SFF, 12G*	762749-001	Mandatory[1]
	n) 800-GB, SSD, SAS, ME, SFF, 12G*	741228-001	Mandatory[1]
	o) 800-GB, SSD, SAS, HE, SFF, 12G*	741234-001	Mandatory[1]
	p) 1.6-TB, SSD, SAS, VE, SFF, 12G*	762751-001	Mandatory[1]
	q) 80-GB, SSD, SATA, VE, SFF, 6G*	734562-001	Mandatory[1]
	r) 240-GB, SSD, SATA, VE, SFF, 6G*	757366-001	Mandatory[1]
	s) 480-GB, SSD, SATA, VE, SFF, 6G*	757371-001	Mandatory[1]
	t) 800-GB, SSD, SATA, VE, SFF, 6G*	718139-001	Mandatory[1]
	u) 100-GB, SSD, SATA ME, SFF, 6G*	692164-001	Mandatory[1]
	v) 120-GB, SSD, SATA, VE, SFF, 6G*	757361-001	Mandatory[1]
	w) 200-GB, SSD, SATA, ME, SFF, 6G*	692165-001	Mandatory[1]
	x) 300-GB, SSD, SATA, VE, SFF, 6G*	739954-001	Mandatory[1]
	y) 400-GB, SSD, SATA, ME, SFF, 6G*	692166-001	Mandatory[1]
	z) 600-GB, SSD, SATA, VE, SFF, 6G*	739959-001	Mandatory[1]
	aa) 800-GB, SSD, SATA, ME, SFF, 6G*	692167-001	Mandatory[1]
	NVMe drives	—	—
	a) 400-GB, SSD, Write intensive, NVMe, 2.5in ME SC2 PLP*	765059-001	Mandatory1
	b) 800-GB, SSD, Write intensive, NVMe, 2.5in ME SC2 PLP*	765060-001	Mandatory1
	c) 1.6-TB, SSD, Write intensive, NVMe, 2.5in ME SC2 PLP*	765061-001	Mandatory1
	d) 400-GB, SSD, Mixed use, NVMe, 2.5in VE SC2 PLP*	765063-001	Mandatory1
	e) 800-GB, SSD, Mixed use, NVMe, 2.5in VE SC2 PLP*	765064-001	Mandatory1
	f) 1.6-TB, SSD, Mixed use, NVMe, 2.5in VE SC2 PLP*	765065-001	Mandatory1
	g) 2.0-TB, SSD, Read intensive, NVMe, 2.5in LE SC2 PLP*	765066-001	Mandatory1
	h) 400-GB, SSD, Read intensive, NVMe, 2.5in VE SC2 PLP*	765067-001	Mandatory1
	i) 1.2-TB, SSD, Read intensive, NVMe, 2.5in VE SC2 PLP*	765068-001	Mandatory1
	j) 2.0-TB, SSD, Read intensive, NVMe, 2.5in VE SC2 PLP*	765069-001	Mandatory1
12	Drive blank	777683-001	Mandatory1

Item	Description	Spare part number	Customer self repair (on page 5)
13	Serial label pull tab	777690-001	Mandatory1
14	Front panel/drive cage assembly	777682-001	Mandatory1
15	Drive backplane	—	—
	SAS/SATA drive backplane	744412-001	Mandatory1
	NVMe drive backplane	744413-001	No3
16	M.2 enablement kit	—	—
	a) 64-GB VE Solid State M.2 Kit	749154-001	Mandatory1
	b) Dual 64-GB VE Solid State M.2 Kit*	797905-001	Mandatory1
	c) 120-GB Read intensive-1 M.2 Blade Enablement Kit*	846756-001	Mandatory1
	d) Dual 120-GB Read intensive-1 M.2 Blade Enablement Kit*	846757-001	Mandatory1
17	Storage controller	—	—
	a) HPE Smart Array H244br Host Bus Adapter	749999-001	Mandatory1
	b) HPE Smart Array P244br Controller*	749800-001	Mandatory1
	c) HPE Smart Array P246br Controller*	750000-001	Mandatory1
18	DIMMs	—	—
	DIMMs optimized for the Intel Xeon E5-2600 v3 processors	—	—
	a) 8-GB, single-rank x4 PC4-2133P-R	774170-001	Mandatory1
	b) 8-GB, dual-rank x8 PC4-2133P-R*	774171-001	Mandatory1
	c) 16-GB, dual-rank x4 PC4-2133P-R*	774172-001	Mandatory1
	d) 16-GB, dual-rank x4 PC4-2133P-L*	774173-001	Mandatory1
	e) 32-GB, dual-rank x4 PC4-2133P-R*	774175-001	Mandatory1
	f) 32-GB, quad-rank x4 PC4-2133P-L*	774174-001	Mandatory1
	g) 64-GB quad-rank x4 PC4-2133-L*	774176-001	Mandatory1
	DIMMs optimized for the Intel Xeon E5-2600 v4 processors	—	—
	a) 8-GB, single-rank x8 PC4-2400T-R*	819410-001	Mandatory1
	b) 16-GB, single-rank x4 PC4-2400T-R*	819411-001	Mandatory1
	c) 16-GB, dual-rank x4 PC4-2400T-R*	846740-001	Mandatory[1]
	d) 32-GB, dual-rank x4 PC4-2400T-R*	819412-001	Mandatory1
	e) 32-GB, dual-rank x4 PC4-2400T-L*	819414-001	Mandatory1
	f) 64-GB, quad-rank x4 PC4-2400T-L*	819413-001	Mandatory1
	g) 128-GB, octal-rank x4 PC4-2400U-L*	819415-001	Mandatory1
19	DIMM baffle, left	777684-001	Mandatory1
20	Trusted Platform Module*	—	—
	a) HPE TPM 1.2 Module Kit*	505836-001	No3
	b) HPE TPM 2.0 Module Kit*	812119-001	No3
21	System battery*	234556-001	Optional2

Item	Description	Spare part number	Customer self repair (on page 5)
22	Server blade release lever kit*	688895-001	Optional2
	a) Server blade release lever assembly	—	—
	b) T-10 screws (4)	—	—
	c) Server blade release lever bracket	—	—
23	HPE c-Class Blade SUV Cable*	416003-001	Mandatory1
24	SATA cable*	784961-001	Mandatory1
25	NVMe pass-through board*	744408-001	No3

*Not shown
**All processors in this HPE ProLiant server must have the same cache size, speed, number of cores, and rated maximum power consumption.
[1]Mandatory—Parts for which customer self repair is mandatory. If you request Hewlett Packard Enterprise to replace these parts, you will be charged for the travel and labor costs of this service.
[2]Optional—Parts for which customer self repair is optional. These parts are also designed for customer self repair. If, however, you require that Hewlett Packard Enterprise replace them for you, there may or may not be additional charges, depending on the type of warranty service designated for your product.
[3]No—Some Hewlett Packard Enterprise parts are not designed for customer self repair. In order to satisfy the customer warranty, Hewlett Packard Enterprise requires that an authorized service provider replace the part. These parts are identified as "No" in the Illustrated Parts Catalog.

[1]Obligatoire—Pièces pour lesquelles le client doit procéder lui-même aux réparations. Si vous demandez à Hewlett Packard Enterprise de procéder au remplacement de ces pièces, les frais de transport et de main d’œuvre pour ce service vous seront facturés.
[2]Facultatif—Pièces pour lesquelles une réparation par le client est facultative. Ces pièces sont également conçues pour que le client puisse procéder lui-même aux réparations. Cependant, les frais supplémentaires engendrés par le remplacement de ces pièces par Hewlett Packard Enterprise dépendent du type de service de garantie désigné pour votre produit.
[3]Non—Certaines pièces Hewlett Packard Enterprise ne sont pas conçues pour être remplacées par le client. Afin de se conformer aux exigences de la garantie la garantie du client, Hewlett Packard Enterprise demande à un fournisseur de services agréé de procéder au remplacement de la pièce. Ces pièces sont signaléespar le mot « Non » dans le Catalogue de pièces illustré.

[1]Obbligatorio—Parti per le quali il cliente è tenuto a effettuare autonomamente la riparazione. Se si richiede l'intervento di Hewlett Packard Enterprise per la sostituzione di queste parti, al cliente verranno addebitate le spese di viaggio e manodopera dell'operazione.
[2]Facoltativo—Parti per le quali la riparazione in autonomia da parte del cliente è facoltativa. Queste parti sono progettate per consentire anche la riparazione da parte del cliente. Tuttavia, se il cliente richiedel'intervento di Hewlett Packard Enterprise per la sostituzione, potrebbero essere addebitate spese aggiuntive a seconda del tipo di garanzia in assistenza previsto per il prodotto.
[3]No—Alcune parti Hewlett Packard Enterprise non sono progettate la riparazione in autonomia da parte del cliente. In base a quanto previsto dalla garanzia per il cliente, Hewlett Packard Enterprise richiede l'intervento di un tecnico autorizzato per la sostituzione della parte. Queste parti sono contrassegnate con"No"nel catalogo parti illustrato.

[1]Zwingend—Teile, für die das Customer Self Repair-Verfahren zwingend vorgegeben ist. Wenn Sie den Austausch dieser Teile von Hewlett Packard Enterprisevornehmen lassen, werden Ihnen die Anfahrt- und Arbeitskosten für diesen Service berechnet.
[2]Optional—Teile, für die das Customer Self Repair-Verfahren optional ist. Diese Teile sind auch für Customer Self Repair ausgelegt. Wenn Sie jedoch den Austausch dieser Teile von Hewlett Packard Enterprisevornehmen lassen möchten, können bei diesem Service je nach den für Ihr Produkt vorgesehenen Garantiebedingungen zusätzliche Kosten anfallen.
[3]Nein—Einige Hewlett Packard Enterprise Teile sind nicht für Customer Self Repair ausgelegt. Um den Garantieanspruch des Kunden zu erfüllen, muss das Teil von einem Hewlett Packard Enterprise Servicepartner ersetzt werden. Im illustrierten Teilekatalog sind diese Teile mit „No“ bzw. „Nein“ gekennzeichnet.

[1]Obligatorio—Componentes cuya reparación por parte del usuario es obligatoria. Si solicita a Hewlett Packard Enterprise que realice la sustitución de estos componentes, tendrá que hacerse cargo de los gastos de desplazamiento y de mano de obra de dicho servicio.

[2]Opcional—Componentes cuya reparación por parte del usuario es opcional. Estos componentes también están diseñados para que puedan ser reparados por el usuario. Sin embargo, si precisa que Hewlett Packard Enterprise realice su sustitución, puede o no conllevar costes adicionales, dependiendo del tipo de servicio de garantía correspondiente al producto.
[3]No—Algunos componentes de Hewlett Packard Enterprise no están diseñados para que puedan ser reparados por el usuario. Para que el usuario haga valer su garantía, Hewlett Packard Enterprise pone como condición que un proveedor de servicios autorizado realice la sustitución de estos componentes. Dichos componentes se identifican con la palabra "No" en el catálogo ilustrado de componentes.

[1]Verplicht—Onderdelen die de klant zelf moet vervangen. Als u Hewlett Packard Enterprise vraagt deze onderdelen te vervangen, worden er reis- en arbeidskosten voor deze service in rekening gebracht.
[2]Optioneel—Onderdelen die de klant zelf kan vervangen. Deze onderdelen zijn ook ontworpen om door de klant zelf te worden vervangen. Als u Hewlett Packard Enterprise verzoekt om deze te vervangen, kan het zijn dat hiervoor extra kosten in rekening worden gebracht, afhankelijk van het soort garantie dat op uw product van toepassing is.
[3]Geen—Sommige onderdelen van Hewlett Packard Enterprise zijn niet ontworpen om door de klant zelf te worden vervangen. Om te voldoen aan de garantievoorwaarden eist Hewlett Packard Enterprise dat een geautoriseerde serviceverlener het onderdeel vervangt. Deze onderdelen worden aangeduid met 'Geen' in de geïllustreerde onderdelencatalogus.

[1]Obrigatório—Peças cujo reparo feito pelo cliente é obrigatório. Se desejar que a Hewlett Packard Enterprise substitua essas peças, serão cobradas as despesas de transporte e mão-de-obra do serviço.
[2]Opcional—Peças cujo reparo feito pelo cliente é opcional. Essas peças também são projetadas para o reparo feito pelo cliente. No entanto, se desejar que a Hewlett Packard Enterprise as substitua, pode haver ou não a cobrança de taxa adicional, dependendo do tipo de serviço de garantia destinado ao produto.
[3]Não—Algumas peças da Hewlett Packard Enterprise não são projetadas para o reparo feito pelo cliente. A fim de cumprir a garantia do cliente, a Hewlett Packard Enterprise exige que um técnico autorizado substitua a peça. Essas peças estão identificadas com a marca "No" (Não), no catálogo de peças ilustrado.

[1]Mandatory：必須 — カスタマーセルフリペアが必須の部品。当該部品について、もしもお客様がHewlett Packard Enterpriseに交換作業を依頼される場合には、その修理サービスに関する交通費および人件費がお客様に請求されます。
[2]Optional：任意 — カスタマーセルフリペアが任意である部品。この部品もカスタマーセルフリペア用です。当該部品について、もしもお客様がHewlett Packard Enterpriseに交換作業を依頼される場合には、お買い上げの製品に適用される保証サービス内容の範囲内においては、別途費用を負担していただくことなく保証サービスを受けることができます。
[3]No：除外 — Hewlett Packard Enterprise製品の一部の部品は、カスタマーセルフリペアの対象外です。製品の保証を継続するためには、Hewlett Packard EnterpriseまたはHewlett Packard Enterprise正規保守代理店による交換作業が必須となります。部品カタログには、当該部品がカスタマーセルフリペア除外品である旨が記載されています。

[1]Mandatory — 客户必须自行维修的部件。如果您请求 Hewlett Packard Enterprise 更换这些部件，则必须为该服务支付差旅费和人工费用。
[2]Optional — 客户可以选择是否自行维修的部件。这些部件也是为客户自行维修设计的。不过，如果您要求 Hewlett Packard Enterprise 为您更换这些部件，则根据为您的产品指定的保修服务类型，Hewlett Packard Enterprise 可能收取或不再收取任何附加费用。
[3]No — 某些 Hewlett Packard Enterprise 部件的设计并未考虑客户自行维修。为了满足客户保修的需要，Hewlett Packard Enterprise 要求授权服务提供商更换相关部件。这些部件在部件图解目录中标记为“否”。

[1]Mandatory — 客戶自行維修所使用的零件是強制性的。如果您要求 Hewlett Packard Enterprise 更換這些零件，Hewlett Packard Enterprise 將會向您收取此服務所需的外出費用與勞動成本。
[2]Optional — 客戶自行維修所使用的零件是選購的。這些零件也設計用於客戶自行維修之用。不過，如果您要求 Hewlett Packard Enterprise 為您更換，則可能需要也可能不需要負擔額外的費用，端視針對此產品指定的保固服務類型而定。
[3]No — 某些 Hewlett Packard Enterprise 零件沒有消費者可自行維修的設計。為符合客戶保固，Hewlett Packard Enterprise 需要授權的服務供應商更換零件。這些零件在圖示的零件目錄中，被標示為「否」。

[1]Mandatory — 고객 셀프 수리가 의무 사항인 필수 부품. 사용자가 Hewlett Packard Enterprise에 이 부품의 교체를 요청할 경우 해당 서비스에 대한 출장비 및 작업비가 청구됩니다.
[2]Optional — 고객 셀프 수리가 선택 사항인 부품. 이러한 부품들도 고객 셀프 수리가 가능하도록 설계되었습니다. 하지만 사용자가 Hewlett Packard Enterprise에 이러한 부품의 교체를 요청할 경우 사용자가 구입한 제품에 해당하는 보증 서비스 유형에 따라 추가 비용 없이 교체가 가능할 수 있습니다.
[3]No — 일부 Hewlett Packard Enterprise 부품은 고객 셀프 수리가 불가능하도록 설계되었습니다. Hewlett Packard Enterprise는 만족스러운 고객 보증을 위해 공인 서비스 제공업체를 통해 부품을 교체하도록 요구하고 있습니다. 이러한 부품들은 Illustrated Parts Catalog에 “No”라고 표시되어 있습니다.

Removal and replacement procedures

Required tools

You need the following items for some procedures:

- T-10 Torx screwdriver
- T-15 Torx screwdriver
- No. 2 Phillips screwdriver
- HPE Insight Diagnostics software ("Insight Diagnostics" on page 60)

Safety considerations

Before performing service procedures, review all the safety information.

Preventing electrostatic discharge

To prevent damaging the system, be aware of the precautions you must follow when setting up the system or handling parts. A discharge of static electricity from a finger or other conductor may damage system boards or other static-sensitive devices. This type of damage may reduce the life expectancy of the device.

To prevent electrostatic damage:

- Avoid hand contact by transporting and storing products in static-safe containers.
- Keep electrostatic-sensitive parts in their containers until they arrive at static-free workstations.
- Place parts on a grounded surface before removing them from their containers.
- Avoid touching pins, leads, or circuitry.
- Always be properly grounded when touching a static-sensitive component or assembly.

Server blade warnings and cautions

⚠ **WARNING:** To reduce the risk of shock or injury from high-current electrical energy, do not remove the server blade access panel and then install the server blade into the enclosure.

⚠ **WARNING:** To reduce the risk of personal injury from hot surfaces, allow the drives and the internal system components to cool before touching them.

△ **CAUTION:** Do not operate the server blade with the access panel removed. Operating the server blade in this manner results in improper airflow and improper cooling that can lead to thermal damage.

△ **CAUTION:** When performing non-hot-plug operations, you must power down the server blade and/or the system. However, it may be necessary to leave the server blade powered up when performing other operations, such as hot-plug installations or troubleshooting.

Symbols on equipment

The following symbols may be placed on equipment to indicate the presence of potentially hazardous conditions.



This symbol indicates the presence of hazardous energy circuits or electric shock hazards. Refer all servicing to qualified personnel.
WARNING: To reduce the risk of injury from electric shock hazards, do not open this enclosure. Refer all maintenance, upgrades, and servicing to qualified personnel.



This symbol indicates the presence of electric shock hazards. The area contains no user or field serviceable parts. Do not open for any reason.
WARNING: To reduce the risk of injury from electric shock hazards, do not open this enclosure.



This symbol on an RJ-45 receptacle indicates a network interface connection.
WARNING: To reduce the risk of electric shock, fire, or damage to the equipment, do not plug telephone or telecommunications connectors into this receptacle.



This symbol indicates the presence of a hot surface or hot component. If this surface is contacted, the potential for injury exists.
WARNING: To reduce the risk of injury from a hot component, allow the surface to cool before touching.



217.7 kg
480.0 lb

This symbol indicates that the component exceeds the recommended weight for one individual to handle safely.
WARNING: To reduce the risk of personal injury or damage to the equipment, observe local occupational health and safety requirements and guidelines for manual material handling.



These symbols, on power supplies or systems, indicate that the equipment is supplied by multiple sources of power.
WARNING: To reduce the risk of injury from electric shock, remove all power cords to disconnect power from the system completely.

Server blade preparation

To service any internal server blade component, power down the server blade and remove it from the enclosure.

Power down the server blade

Before powering down the server blade for any upgrade or maintenance procedures, perform a backup of critical server data and programs.

IMPORTANT: When the server blade is in standby mode, auxiliary power is still being provided to the system.

Depending on the Onboard Administrator configuration, use one of the following methods to power down the server blade:

- Press and release the Power On/Standby button.

  This method initiates a controlled shutdown of applications and the OS before the server blade enters standby mode.

- Press and hold the Power On/Standby button for more than 4 seconds to force the server blade to enter standby mode.

This method forces the server blade to enter standby mode without properly exiting applications and the OS. If an application stops responding, you can use this method to force a shutdown.

- Use a virtual power button selection through iLO.

  This method initiates a controlled remote shutdown of applications and the OS before the server blade enters standby mode.

- Use the Onboard Administrator CLI to execute one of the following commands:
  - `poweroff server [bay number]`

    This command initiates a controlled shutdown of applications and the OS before the server blade enters standby mode.
  - `poweroff server [bay number] force`

    This form of the command forces the server blade to enter standby mode without properly exiting applications and the OS. If an application stops responding, this method forces a shutdown.

- Use the Onboard Administrator GUI to initiate a shutdown:
  a. Select the **Enclosure Information** tab.
  b. In the Device Bays item, select the **Overall** checkbox.
  c. From the Virtual Power menu, initiate a shutdown of applications and the OS:
     — For a controlled shutdown, select **Momentary Press**.
     — For an emergency shutdown, select **Press and Hold**.

Before proceeding, verify that the server blade is in standby mode by observing that the system power LED is amber.

Remove the server blade

1. Identify the proper server blade.
2. Power down the server blade (on page 23).
3. Remove the server blade.

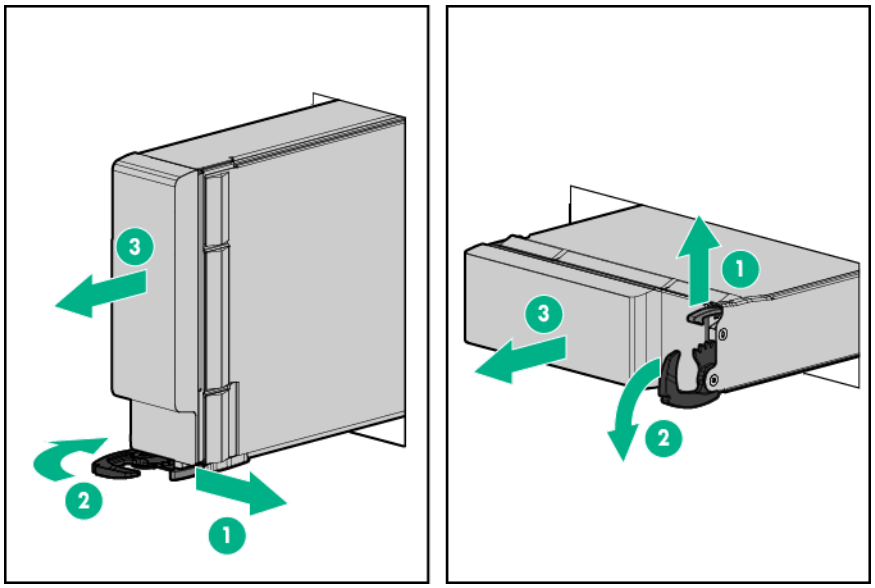

4. Place the server blade on a flat, level work surface.

WARNING: To reduce the risk of personal injury from hot surfaces, allow the drives and the internal system components to cool before touching them.

CAUTION: To prevent damage to electrical components, properly ground the server blade before beginning any installation procedure. Improper grounding can cause ESD.

Install the server blade

CAUTION: To prevent improper cooling and thermal damage, do not operate the server blade enclosure unless all bays are populated with either a component or a blank.

CAUTION: Failure to install the divider in a quadrant when installing half-height blades can result in damage to the connectors on the server blades.

For the best possible BladeSystem and Virtual Connect experience, and to prevent a future reboot, Hewlett Packard Enterprise requires updating the Onboard Administrator and Virtual Connect to the correct version before installing a ProLiant Gen9 server blade. The version information is located on the tag on the front of the server blade.

For more information on this and other specific firmware and driver requirements, as well as the latest firmware and driver versions, download the SPP on the Hewlett Packard Enterprise website (**http://www.hpe.com/servers/spp/download**).

1. Remove the device bay blank. Retain the blank for future use.

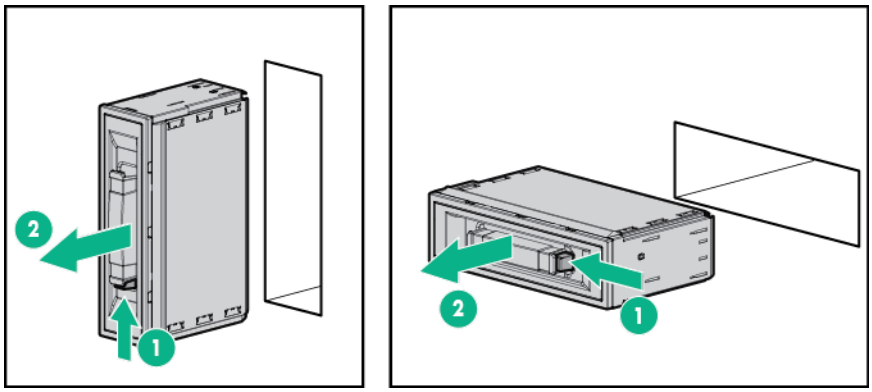

2. Remove the enclosure connector cover. Retain the blank for future use.

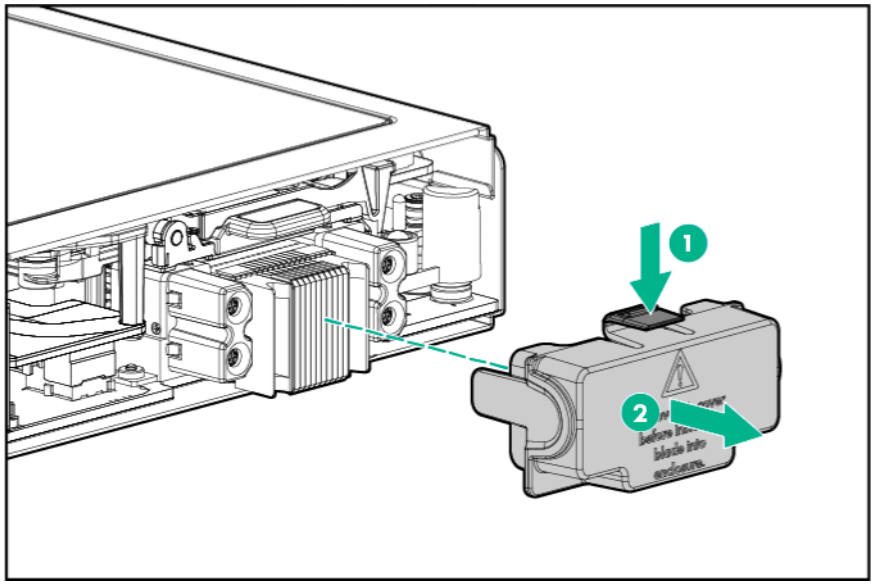

3. Install the server blade.

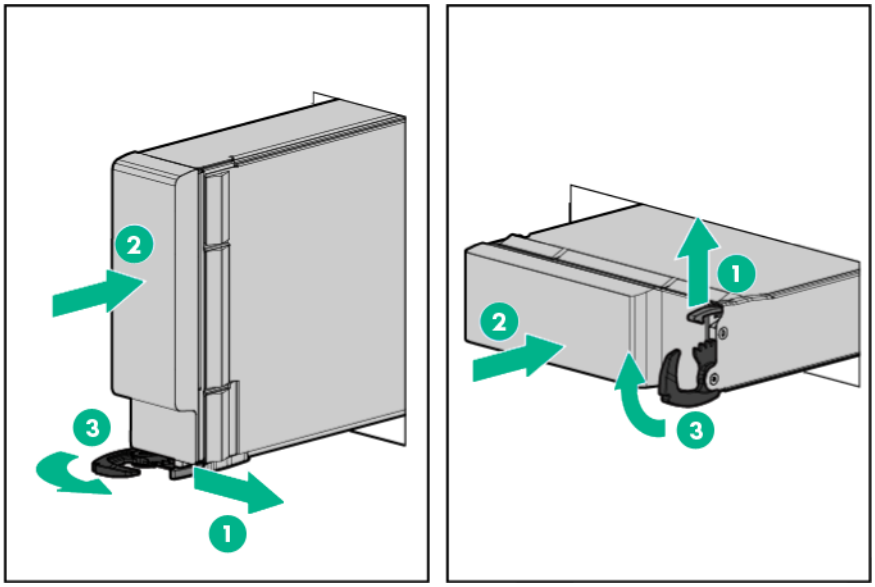

Access panel

To remove the component:

1. Power down the server blade (on page 23).
2. Remove the server blade (on page 24).
3. Press the access panel release button.
4. Slide the access panel towards the rear of the server blade, and then lift to remove the panel.

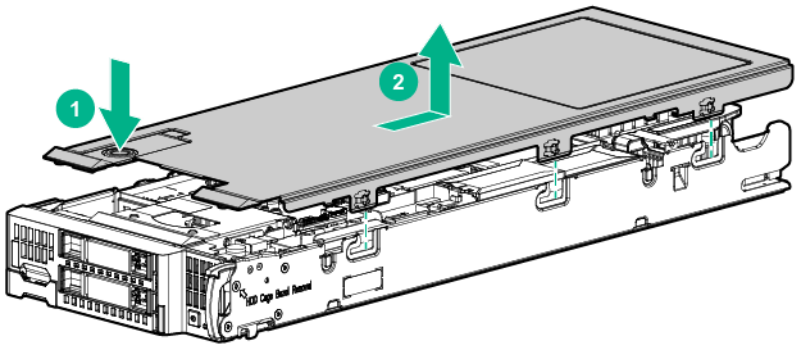

To replace the component:

1. Place the access panel on top of the server blade.

2. Slide the access panel forward until it clicks into place.

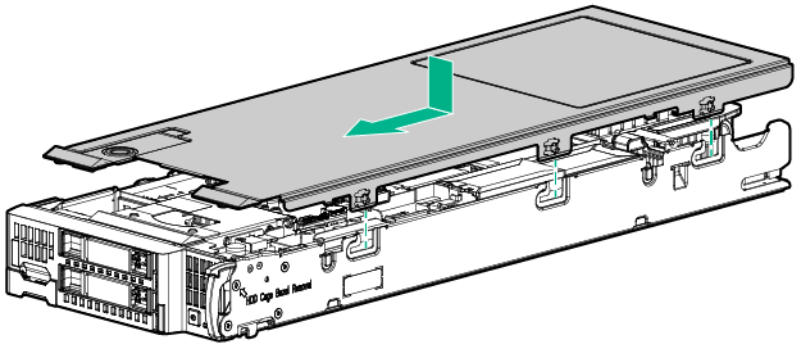

Drive blank

Remove the component as indicated.

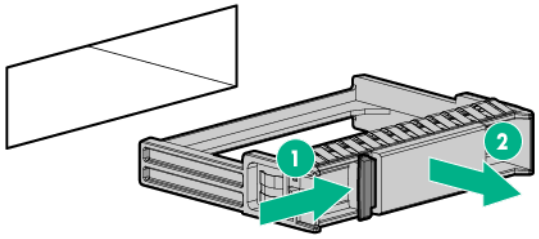

To replace the component, squeeze the release latch and slide the drive blank into the bay until it clicks into place.

SAS/SATA drive

To remove the component:

1. Determine the status of the drive from the drive LED definitions ("Hot-plug drive LED definitions" on page 67).
2. Back up all server blade data on the drive.
3. Remove the drive.

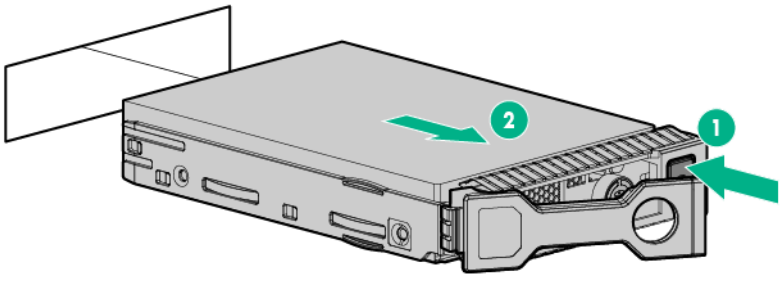

To replace the drive, slide the drive into the bay until it is fully seated, and then close the release lever to lock the drive in the bay.

NVMe SSD

The NVMe SSD is a PCIe BUS device. A device attached to a PCIe bus cannot be removed without allowing the device and bus to complete and cease the signal/traffic flow.

To remove the component:

1. Determine the status of the drive from the drive LED definitions ("NVMe SSD components" on page 68).
2. Back up all data on the drive.
3. Remove the drive:
   a. Push the Power button.
   b. The Do Not Remove button will illuminate and flash. Do not depress the button while it is illuminated.
   c. Wait until the flashing stops and the icon on the button is no longer illuminated.
   d. Depress the Do Not remove button to release the release lever.
   e. Pull the release lever to disengage the drive from the backplane and slide the drive out of the drive bay.

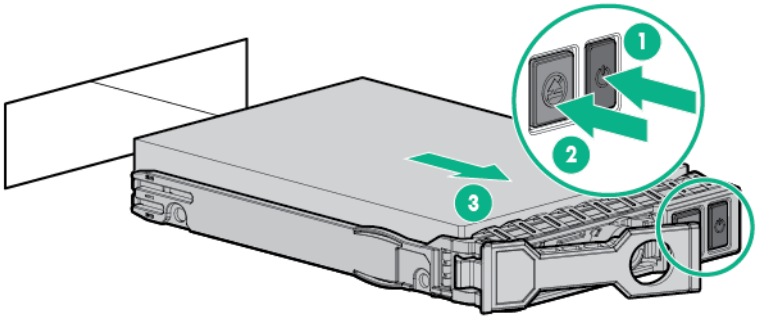

To replace the drive, slide the drive into the bay until it is fully seated, and then close the release lever to lock the drive in the bay.

Enclosure connector cover

To remove the component:

1. Place the server blade on a flat, level work surface.

2. Remove the enclosure connector cover.

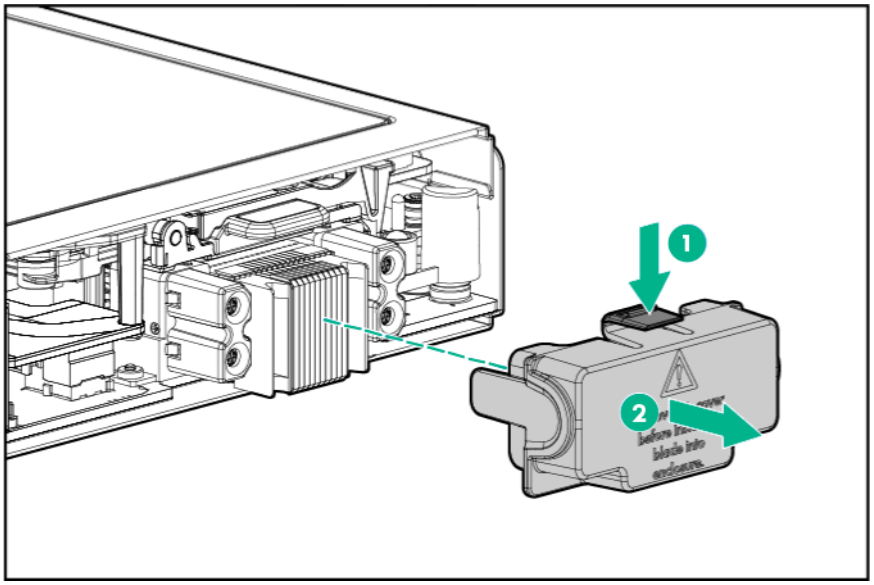

To replace the component, reverse the removal procedure.

Direct connect SATA cable

To remove the component:

1. Power down the server blade (on page 23).
2. Remove the server blade (on page 24).
3. Place the server blade on a flat, level work surface.
4. Remove the access panel ("Access panel" on page 26).
5. Remove the direct connect SATA cable.
   a. Press in the latch on the connector.
   b. Disconnect the connector from the system board.
   c. Loosen the captive screw.
   d. Disconnect the other end of the cable from the drive backplane.

e. Release the cable from the DIMM baffle.

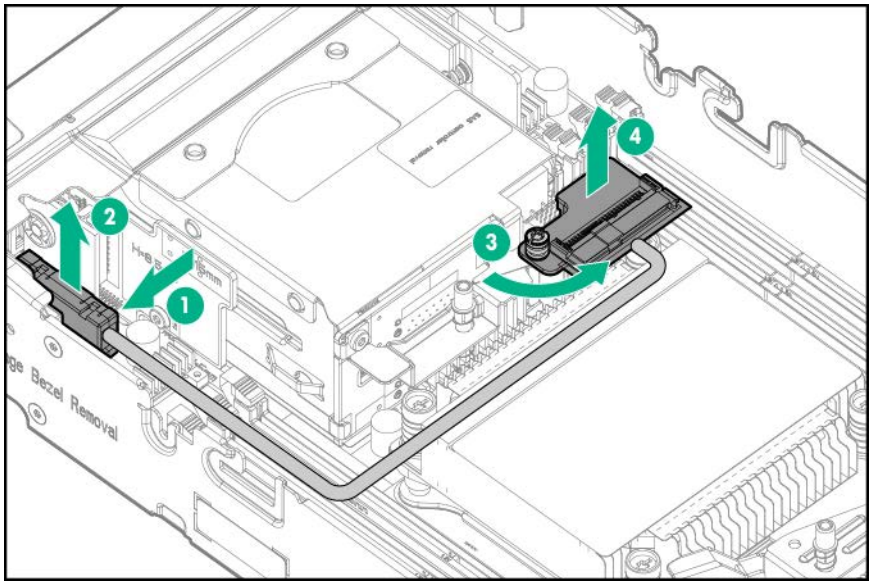

To replace the component, reverse the removal procedure.

Mezzanine assembly

To remove the component:

1. Power down the server blade (on page 23).
2. Remove the server blade (on page 24).
3. Place the server blade on a flat, level work surface.
4. Remove the access panel ("Access panel" on page 26).
5. Remove the mezzanine assembly.

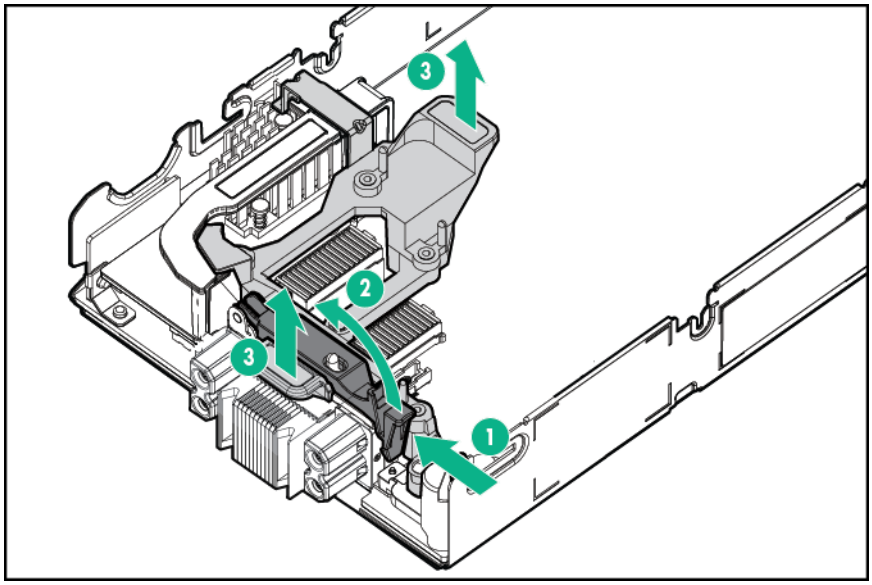

To replace the component:

1. Align the mezzanine assembly with the guide pins on the system board, and then install the mezzanine assembly on the system board.

2. Press down firmly on the mezzanine assembly handles, and then close the mezzanine assembly latch.

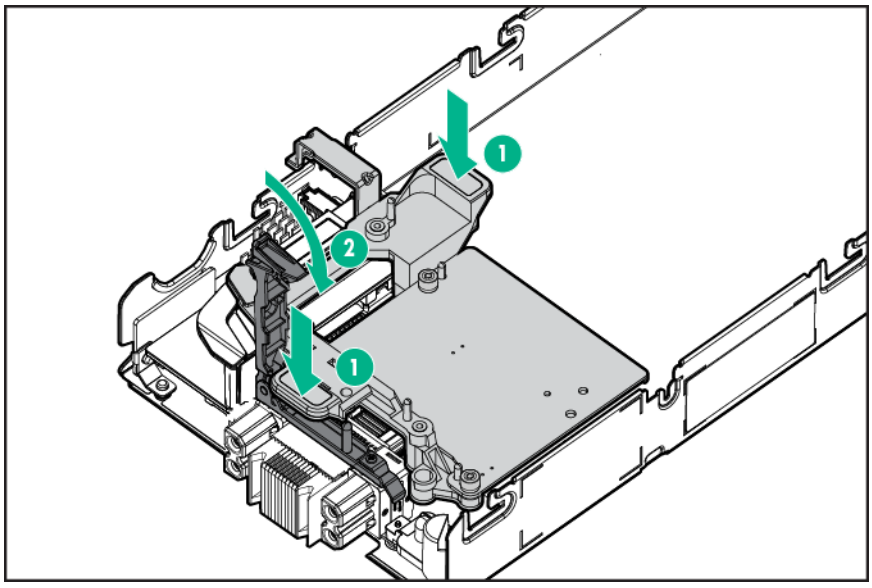

3. Install the access panel.
4. Install the server blade (on page 25).

Mezzanine options

To remove the component:

1. Power down the server blade (on page 23).
2. Remove the server blade (on page 24).
3. Place the server blade on a flat, level work surface.
4. Remove the access panel ("Access panel" on page 26).
5. Remove the mezzanine assembly ("Mezzanine assembly" on page 30).
6. Remove the mezzanine card from the mezzanine assembly.

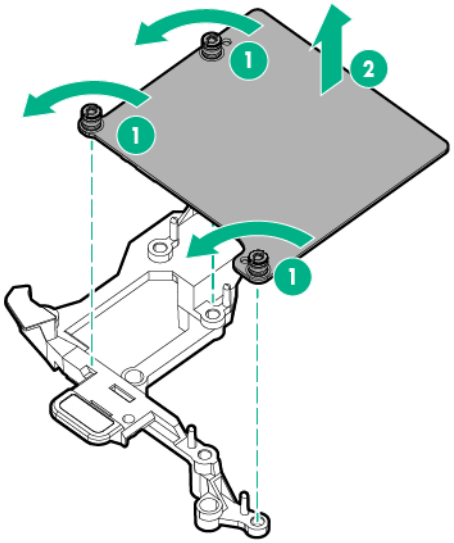

To replace the component:

1. Align the mezzanine card with the guide pins on the mezzanine assembly.

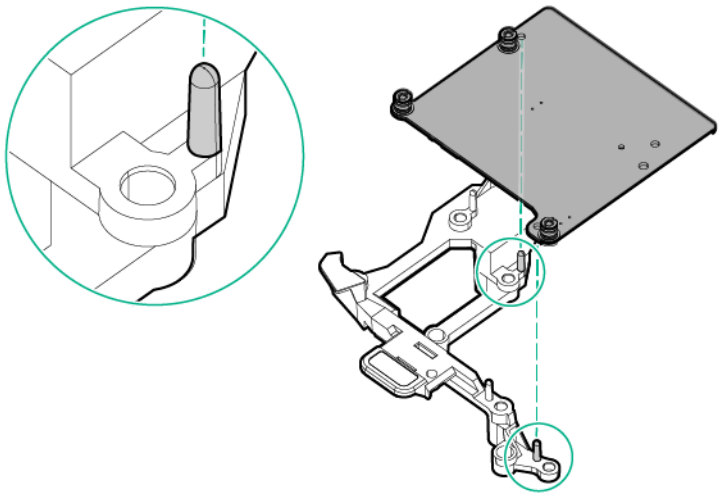

2. Install the mezzanine card in the mezzanine assembly, and then tighten the mezzanine card screws to secure the card to the mezzanine assembly.

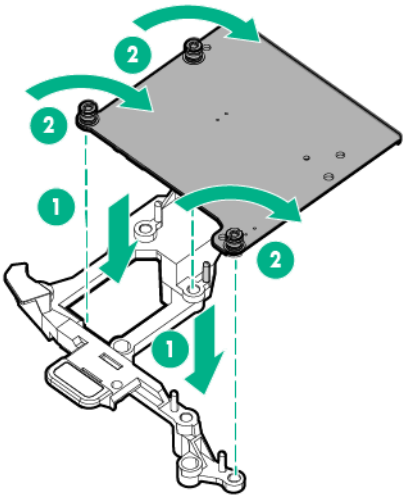

3. Align the mezzanine assembly with the guide pins on the system board, and then install the mezzanine assembly on the system board.

4. Press down firmly on the mezzanine assembly handles, and then close the mezzanine assembly latch.

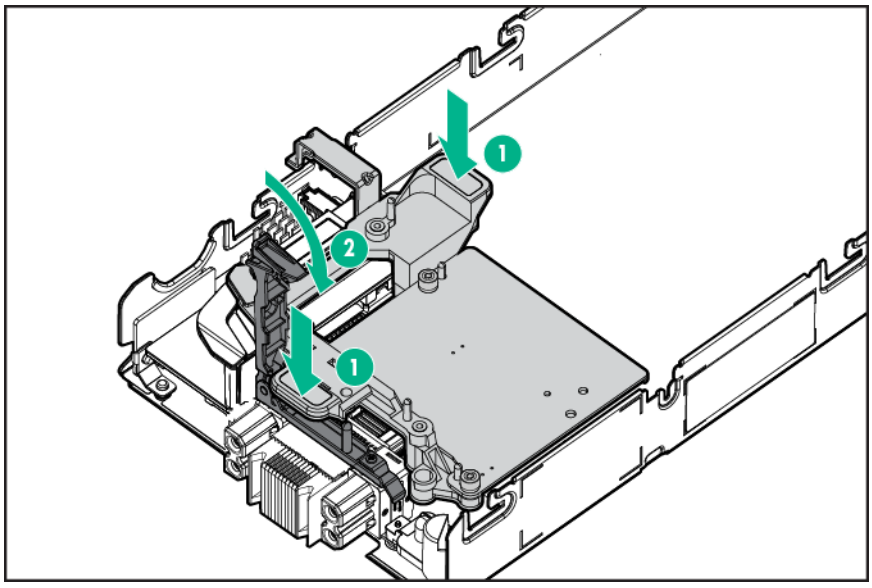

5. Install the access panel.

FlexibleLOM

To remove the component:

1. Power down the server blade (on page 23).
2. Remove the server blade (on page 24).
3. Place the server blade on a flat, level work surface.
4. Remove the access panel ("Access panel" on page 26).
5. Remove the mezzanine assembly ("Mezzanine assembly" on page 30).
6. Use the FlexibleLOM handle to remove the FlexibleLOM from the system board.

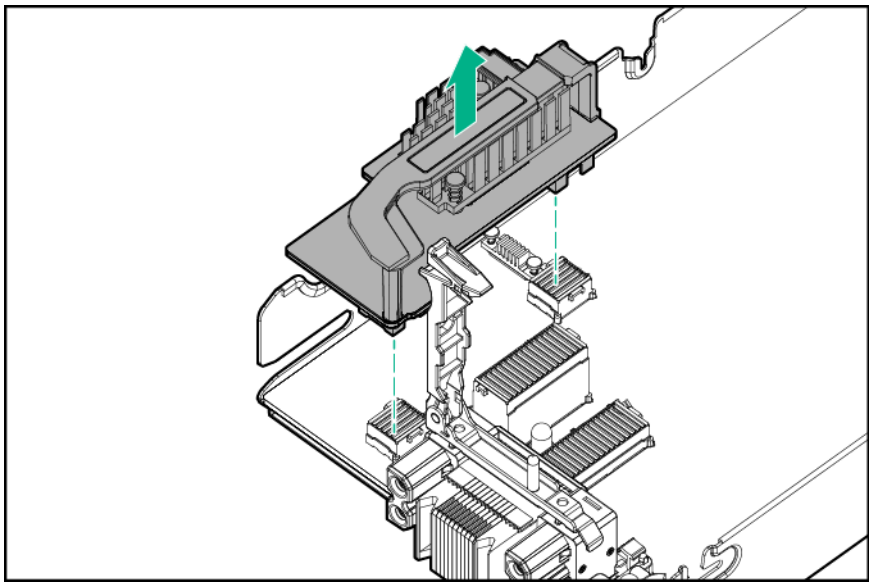

To replace the component, reverse the removal procedure.

Storage controller/NVMe pass-through board

To remove the component:

1. Power down the server blade (on page 23).
2. Remove the server blade (on page 24).
3. Place the server blade on a flat, level work surface.
4. Remove the access panel ("Access panel" on page 26).
5. Prepare the storage controller/NVMe pass-through board for removal.

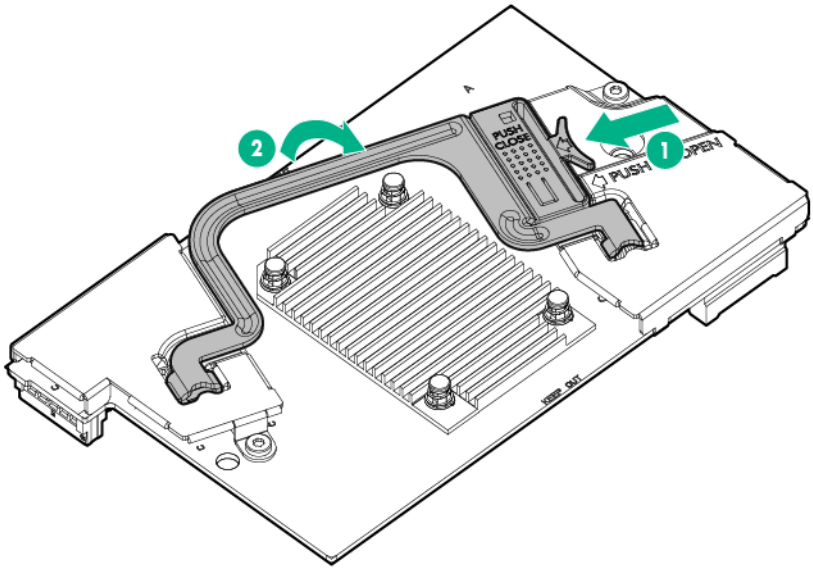

6. Remove the storage controller/NVMe pass-through board.

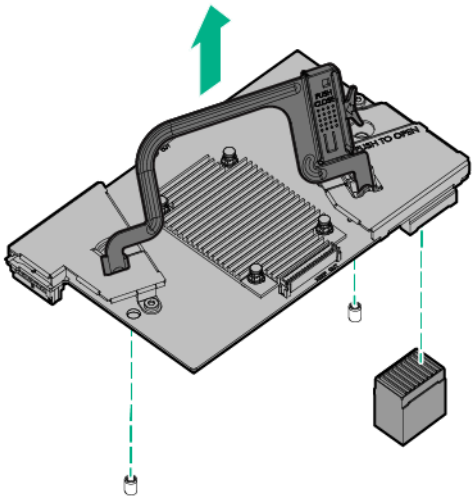

To replace the component, reverse the removal procedure.

Heatsink blank

To remove the component:

1. Power down the server blade (on page 23).

2. Remove the server blade (on page 24).
3. Place the server blade on a flat, level work surface.
4. Remove the access panel ("Access panel" on page 26).
5. Do one of the following:
   - Remove the storage controller/NVMe pass-through board ("Storage controller/NVMe pass-through board" on page 34).
   - Remove the direct connect SATA cable ("Direct connect SATA cable" on page 29).
6. Using a no. 2 Phillips screwdriver, remove the heatsink blank.

   Retain the heatsink blank for future use.

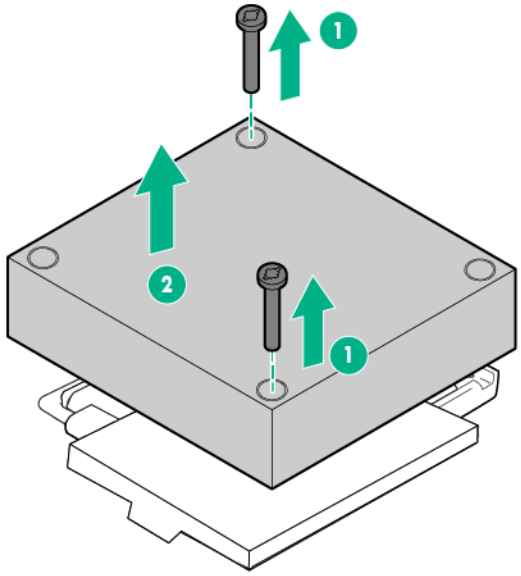

To replace the component, reverse the removal procedure.

CAUTION: To avoid damage to the system board, processor socket, and screws, do not overtighten the heatsink screws.

DIMM baffles

The server contains two DIMM baffles.

To remove the component:

1. Power down the server blade (on page 23).
2. Remove the server blade (on page 24).
3. Place the server blade on a flat, level work surface.
4. Remove the access panel ("Access panel" on page 26).
5. If installed, remove the direct connect SATA cable ("Direct connect SATA cable" on page 29).
6. If installed, remove the internal USB drive. To locate the internal USB connector, see "System board components (on page 69)."

IMPORTANT: When removing the right DIMM baffle, leave the Smart Storage Battery installed on the baffle. Use the blue pull tab to disconnect the Smart Storage Battery cable from the system board.

7. Remove one or more DIMM baffles:

- DIMM baffle (right side)

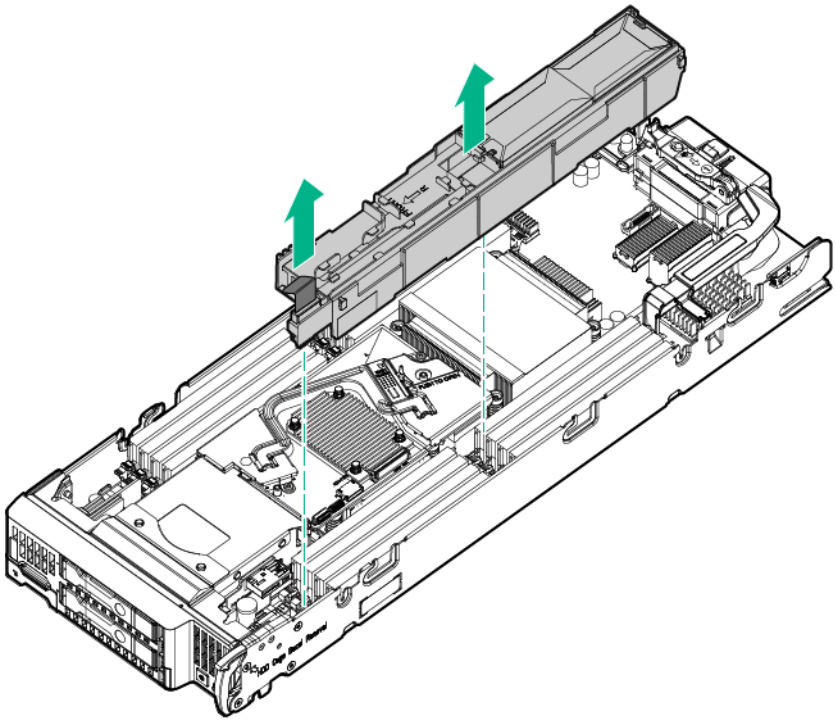

- DIMM baffle (left side)

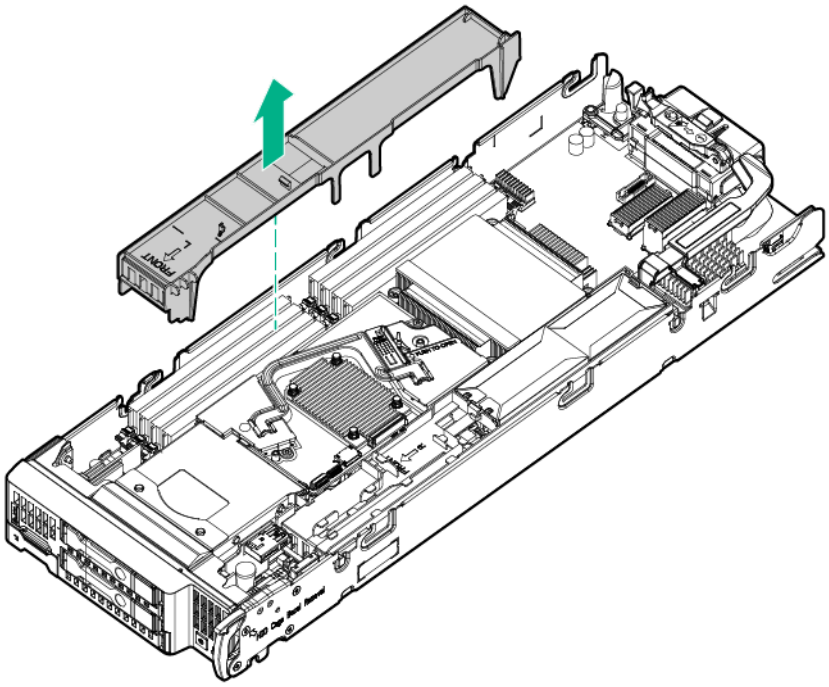

To replace the component, reverse the removal procedure.

DIMMs

CAUTION: To prevent improper cooling and thermal damage, always install DIMMs of the same height on the server blade. This server blade does not support mixing standard and non-standard height DIMMs.

To identify the DIMMs installed in the server blade, see "DIMM identification (on page 71)."

To remove the component:

1. Power down the server blade (on page 23).
2. Remove the server blade (on page 24).
3. Place the server blade on a flat, level work surface.
4. Remove the access panel ("Access panel" on page 26).
5. Remove the mezzanine assembly ("Mezzanine assembly" on page 30).
6. Remove the FlexibleLOM ("FlexibleLOM" on page 33).
7. Remove the storage controller ("Storage controller/NVMe pass-through board" on page 34).
8. Disconnect the direct connect SATA cable, if installed.
9. Remove the internal USB drive, if installed. To locate the internal USB connector, see "System board components (on page 69)."
10. Remove all DIMM baffles ("DIMM baffles" on page 35).
11. Remove the DIMM.

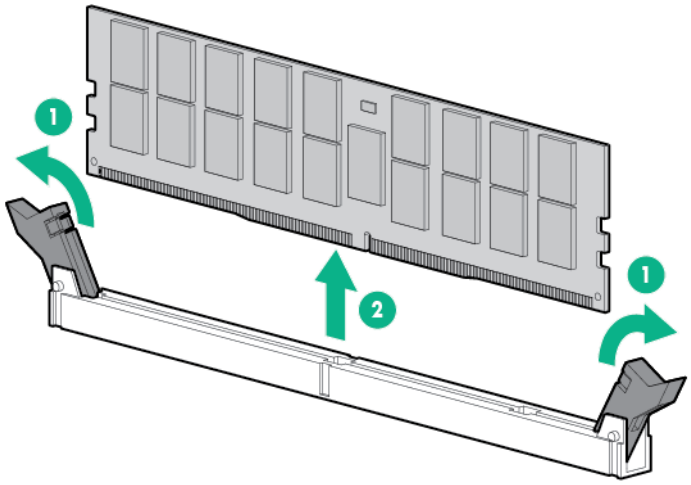

To replace the component, reverse the removal procedure. To configure the memory mode, use UEFI System Utilities (on page 59).

HPE Smart Storage Battery

To remove the component:

1. Power down the server blade (on page 23).
2. Remove the server blade (on page 24).
3. Remove the access panel ("Access panel" on page 26).
4. Place the server blade on a flat, level work surface.
5. Disconnect the direct connect SATA cable, if installed.
6. Remove the internal USB drive, if installed. To locate the internal USB connector, see "System board components (on page 69)."
7. Remove the right DIMM baffle ("DIMM baffles" on page 35).

8. Remove the Smart Storage Battery.

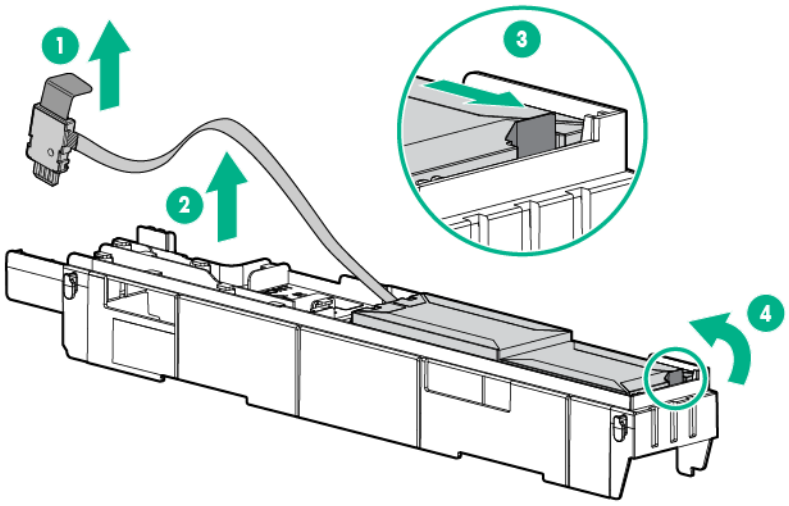

To replace the component, reverse the removal procedure.

Front panel/drive cage assembly

To remove the component:

1. Power down the server blade (on page 23).
2. Remove the server blade (on page 24).
3. Place the server blade on a flat, level work surface.
4. Remove the access panel ("Access panel" on page 26).
5. Do one of the following:
   - Remove the storage controller/NVMe pass-through board ("Storage controller/NVMe pass-through board" on page 34).
   - Remove the direct connect SATA cable ("Direct connect SATA cable" on page 29).
6. If installed, remove the internal USB drive. To locate the internal USB connector, see "System board components (on page 69)."
7. Remove all DIMM baffles ("DIMM baffles" on page 35).

△ **CAUTION:** Always remove the storage controller/NVMe pass-through board before removing the front panel/drive cage assembly.

8. Remove the front panel/drive cage assembly:
   a. Extend the serial label pull tab from the front of the server blade.
   b. Remove the two T-15 screws from the front panel/drive cage assembly.

c. Remove the component.

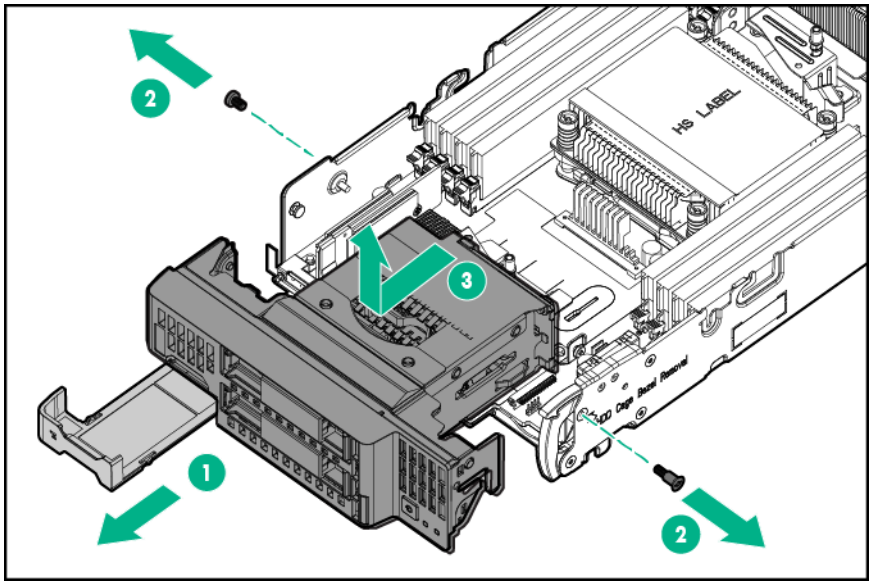

To replace the component, reverse the removal procedure.

SAS/SATA or NVMe backplanes

To remove the component:

1. Power down the server blade (on page 23).
2. Remove the server blade (on page 24).
3. Place the server blade on a flat, level work surface.
4. Remove the access panel ("Access panel" on page 26).
5. Remove all drives ("SAS/SATA drive" on page 27, "NVMe SSD" on page 28).
6. Remove all drive blanks ("Drive blank" on page 27).

> △ **CAUTION:** Remove all drives and drive blanks before removing the drive backplane.

7. Do one of the following:
   - Remove the storage controller/NVMe pass-through board ("Storage controller/NVMe pass-through board" on page 34).
   - Remove the direct connect SATA cable ("Direct connect SATA cable" on page 29).
8. Remove the internal USB drive, if installed. To locate the internal USB connector, see "System board components (on page 69)."
9. Remove all DIMM baffles ("DIMM baffles" on page 35).
10. Remove the front panel/drive cage assembly ("Front panel/drive cage assembly" on page 38).

11. Remove the SAS/SATA or the NVMe drive backplane from the front panel/drive cage assembly.

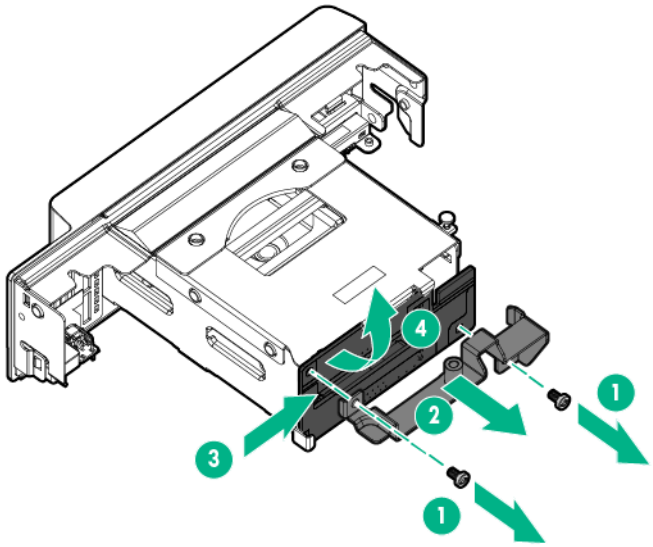

To replace the component, reverse the removal procedure.

System battery

If the server blade no longer automatically displays the correct date and time, then replace the battery that provides power to the real-time clock. Under normal use, battery life is 5 to 10 years.

⚠ **WARNING:** The computer contains an internal lithium manganese dioxide, a vanadium pentoxide, or an alkaline battery pack. A risk of fire and burns exists if the battery pack is not properly handled. To reduce the risk of personal injury:

- Do not attempt to recharge the battery.
- Do not expose the battery to temperatures higher than 60°C (140°F).
- Do not disassemble, crush, puncture, short external contacts, or dispose of in fire or water.
- Replace only with the spare designated for this product.

To remove the component:

1. Power down the server blade (on page 23).
2. Remove the server blade (on page 24).
3. Place the server blade on a flat, level work surface.
4. Locate the battery on the system board ("System board components" on page 69).

5. Remove the battery.

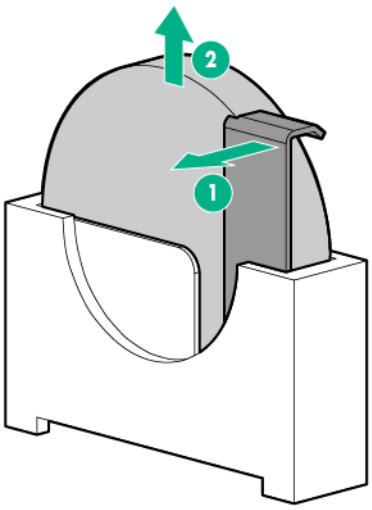

IMPORTANT: Replacing the system board battery resets the system ROM to its default configuration. After replacing the battery, reconfigure the system through UEFI System Utilities.

To replace the component, reverse the removal procedure.

For more information about battery replacement or proper disposal, contact an authorized reseller or an authorized service provider.

Heatsink

WARNING: To reduce the risk of personal injury from hot surfaces, allow the drives and the internal system components to cool before touching them.

To remove the component:

1. Power down the server blade (on page 23).
2. Remove the server blade (on page 24).
3. Place the server blade on a flat, level work surface.
4. Remove the access panel ("Access panel" on page 26).
5. Do one of the following:
   - Remove the storage controller/NVMe pass-through board ("Storage controller/NVMe pass-through board" on page 34).
   - Remove the direct connect SATA cable ("Direct connect SATA cable" on page 29).

   NOTE: Only remove the storage controller if the processor 2 heatsink is being removed.

6. Remove the internal USB drive, if installed. To locate the internal USB connector, see "System board components (on page 69)."
7. Remove all DIMM baffles ("DIMM baffles" on page 35).

8. Remove the heatsink.

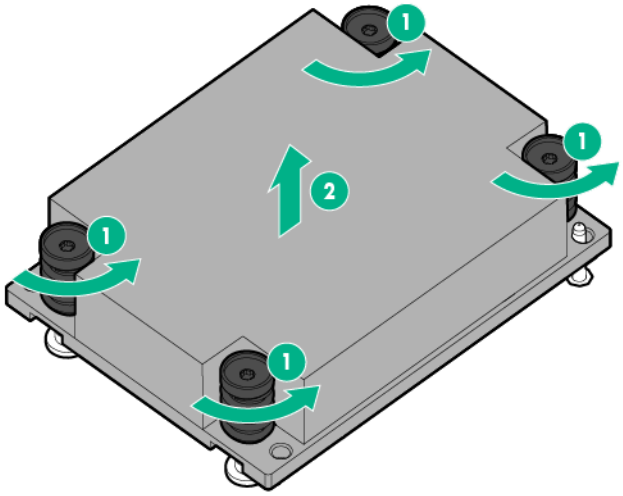

To replace the component:

1. Clean the old thermal grease from the heatsink with the alcohol swab. Allow the alcohol to evaporate before continuing.
2. Apply all the grease to the top of the processor in the following pattern to ensure even distribution.

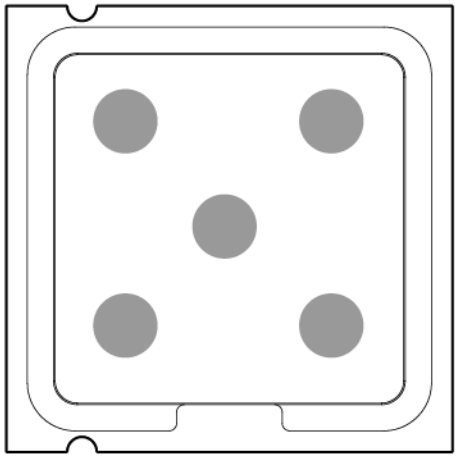

3. Remove the thermal interface protective cover from the heatsink.

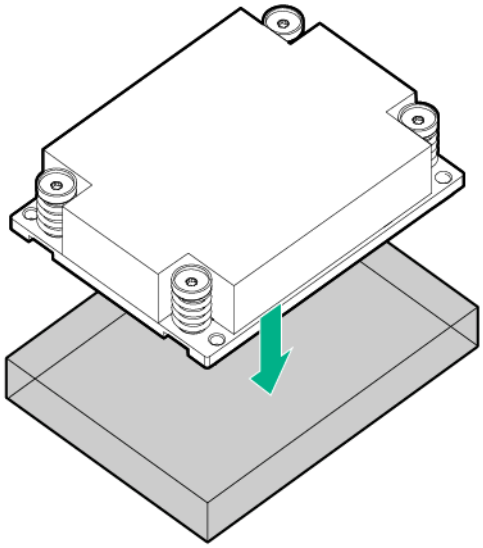

△ **CAUTION:** To avoid damage to the system board, processor socket, and screws, do not overtighten the heatsink screws.

4. Align and install the heatsink. Alternate tightening the screws until the heatsink is seated properly.

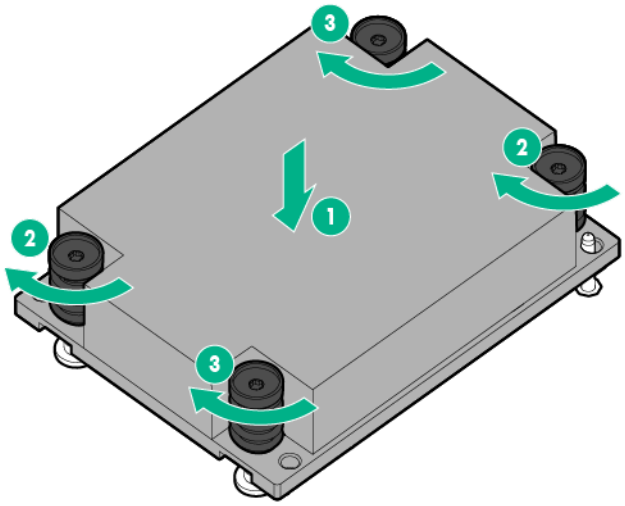

5. Do one of the following:
   - Install the storage controller/NVMe pass-through board.
   - Install the direct connect SATA cable.
6. Install all DIMM baffles.
7. Install the internal USB drive.
8. Install the access panel.
9. Install the server blade (on page 25).

Processor

WARNING: To reduce the risk of personal injury from hot surfaces, allow the drives and the internal system components to cool before touching them.

CAUTION: To prevent possible server malfunction, do not mix processors of different speeds or cache sizes. Refer to the label on the processor heatsink for a description of the processor.

CAUTION: To prevent possible server blade overheating, always populate each processor socket with a processor socket cover and a heatsink blank or a processor and a heatsink.

CAUTION: To prevent damage to electrical components, properly ground the server blade before beginning any installation procedure. Improper grounding can cause ESD.

IMPORTANT: Processor socket 1 must always be populated. If processor socket 1 is empty, the server blade does not power up.

For more information about server blade memory, see the Hewlett Packard Enterprise website (**http://www.hpe.com/info/memory**).

To remove the component:

1. Update the system ROM.

   Locate and download the latest ROM version from the Hewlett Packard Enterprise website (**http://www.hpe.com/support**). Follow the instructions on the website to update the system ROM.
2. Power down the server blade (on page 23).
3. Remove the server blade (on page 24).
4. Place the server blade on a flat, level work surface.
5. Remove the access panel ("Access panel" on page 26).
6. Do one of the following:
   - Remove the storage controller/NVMe pass-through board ("Storage controller/NVMe pass-through board" on page 34).
   - Remove the direct connect SATA cable ("Direct connect SATA cable" on page 29).
7. Remove the internal USB drive, if installed. To locate the internal USB connector, see "System board components (on page 69)."
8. Remove all DIMM baffles ("DIMM baffles" on page 35).
9. Remove the heatsink ("Heatsink" on page 41).

10. Open each of the processor locking levers in the order indicated, and then open the processor retaining bracket.

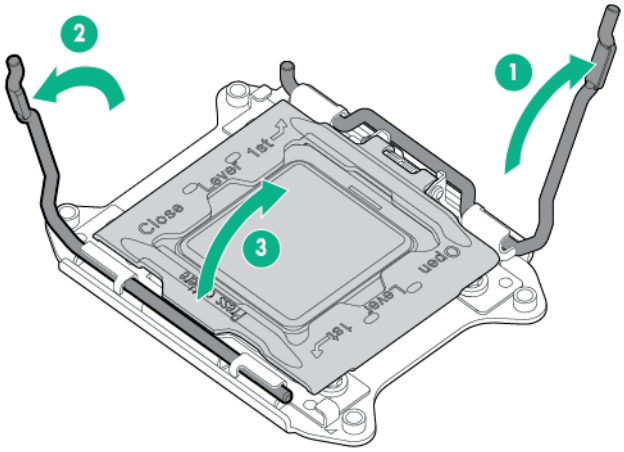

△ **CAUTION: THE PINS ON THE SYSTEM BOARD ARE VERY FRAGILE AND EASILY DAMAGED.** To avoid damage to the system board, do not touch the processor or the processor socket contacts.

11. Remove the processor from the processor retaining bracket.

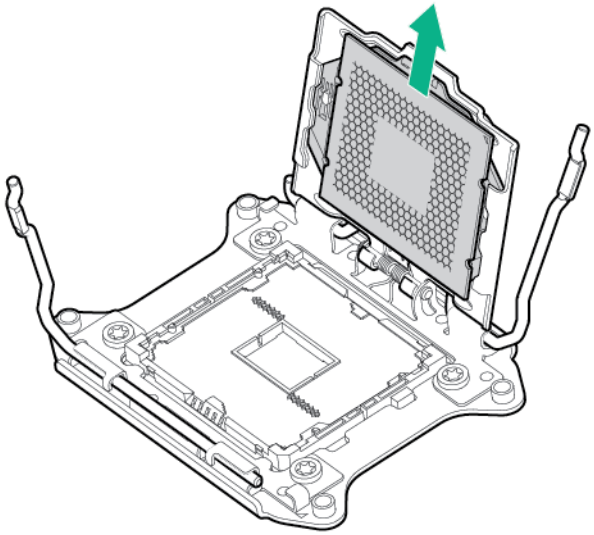

To replace the component:

△ **CAUTION:** To avoid damage to the system board, processor socket, and screws, do not overtighten the heatsink screws.

1. Install the processor. Verify that the processor is fully seated in the processor retaining bracket by visually inspecting the processor installation guides on either side of the processor. **THE PINS ON THE SYSTEM BOARD ARE VERY FRAGILE AND EASILY DAMAGED**.

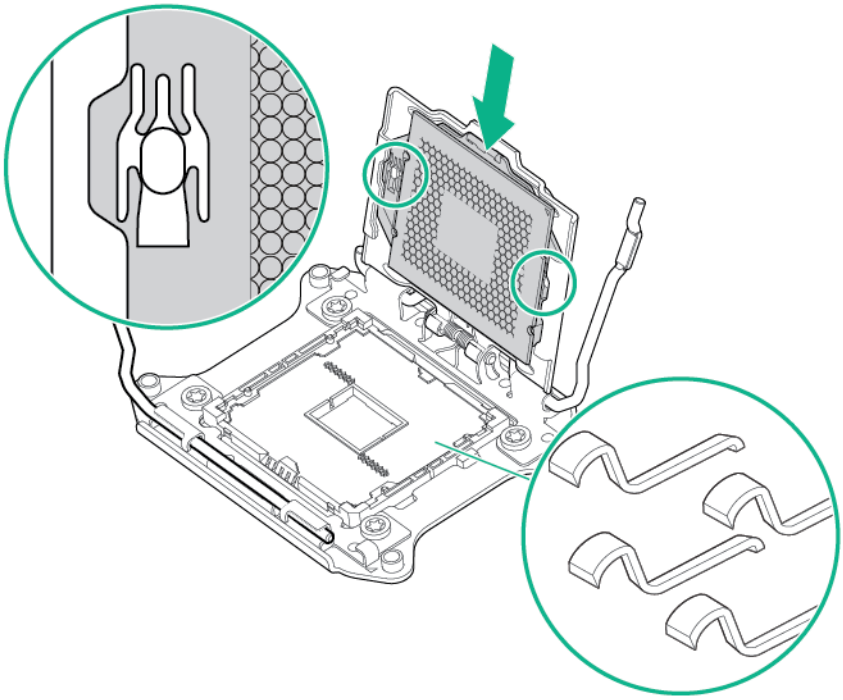

△ **CAUTION: THE PINS ON THE SYSTEM BOARD ARE VERY FRAGILE AND EASILY DAMAGED.** To avoid damage to the system board, do not touch the processor or the processor socket contacts.

△ **CAUTION:** Do not press down on the processor. Pressing down on the processor might damage the processor socket and the system board. Press only in the area indicated on the processor retaining bracket.

2. Close the processor retaining bracket. When the processor is installed properly inside the processor retaining bracket, the processor retaining bracket clears the flange on the front of the socket.

3. Press and hold the processor retaining bracket in place, and then close each processor locking lever. Press only in the area indicated on the processor retaining bracket.

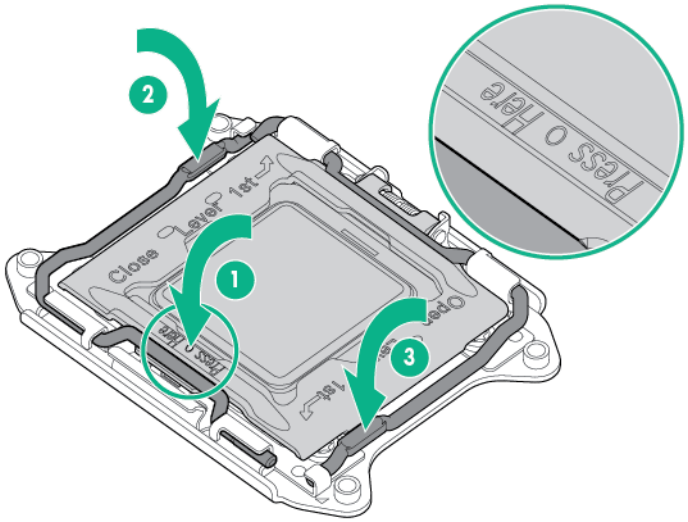

4. Clean the old thermal grease from the heatsink with the alcohol swab. Allow the alcohol to evaporate before continuing.
5. Apply all the grease to the top of the processor in the following pattern to ensure even distribution.

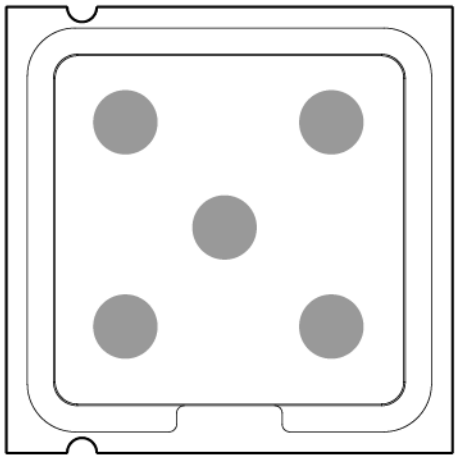

6. Align and install the heatsink. Alternate tightening the screws until the heatsink is seated properly.

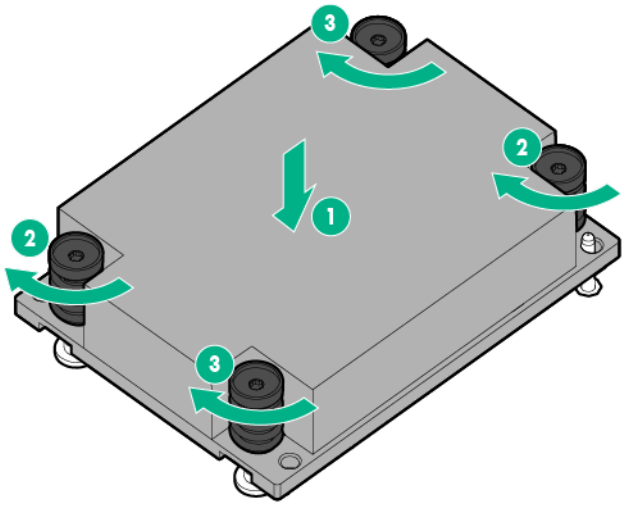

7. Install all DIMM baffles.
8. Install the internal USB drive.
9. Do one of the following:
   - Install the storage controller/NVMe pass-through board.
   - Install the direct connect SATA cable.
10. Install the access panel.
11. Install the server blade (on page 25).

System board with base pan

> **CAUTION:** When returning a damaged system board to Hewlett Packard Enterprise, always install all processor socket covers to prevent damage to the processor sockets and system board.

To remove the component:

1. Power down the server blade (on page 23).
2. Remove the server blade (on page 24).
3. Place the server blade on a flat, level work surface.
4. Remove the access panel ("Access panel" on page 26).
5. Remove all drives ("SAS/SATA drive" on page 27, "NVMe SSD" on page 28).
6. Remove all drive blanks ("Drive blank" on page 27).
7. Remove the mezzanine assembly ("Mezzanine assembly" on page 30).
8. Remove the FlexibleLOM ("FlexibleLOM" on page 33).
9. Do one of the following:
   - Remove the storage controller/NVMe pass-through board ("Storage controller/NVMe pass-through board" on page 34).
   - Remove the direct connect SATA cable ("Direct connect SATA cable" on page 29).
10. Remove the internal USB drive, if installed. To locate the internal USB connector, see "System board components (on page 69)."

11. Remove the microSD card, if installed. To locate the microSD card, see "System board components (on page 69)."
12. Remove all DIMM baffles ("DIMM baffles" on page 35).
13. Remove all DIMMs ("DIMMs" on page 36).
14. Remove the front panel/drive cage assembly ("Front panel/drive cage assembly" on page 38).
15. Remove all heatsinks ("Heatsink" on page 41).
16. Open each of the processor locking levers in the order indicated, and then open the processor retaining bracket.

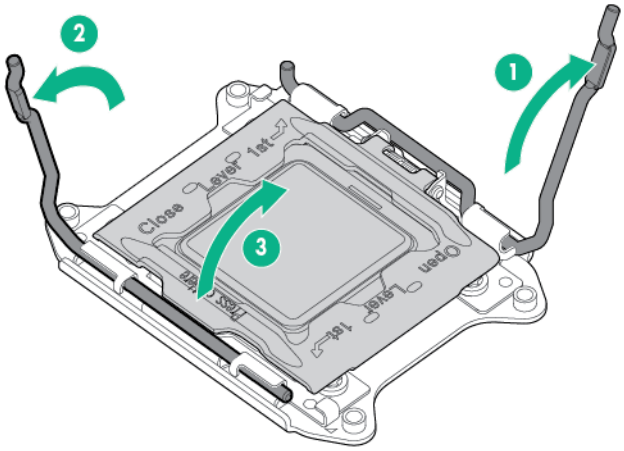

△ **CAUTION: THE PINS ON THE SYSTEM BOARD ARE VERY FRAGILE AND EASILY DAMAGED.** To avoid damage to the system board, do not touch the processor or the processor socket contacts.

17. Remove the processor from the processor retaining bracket.

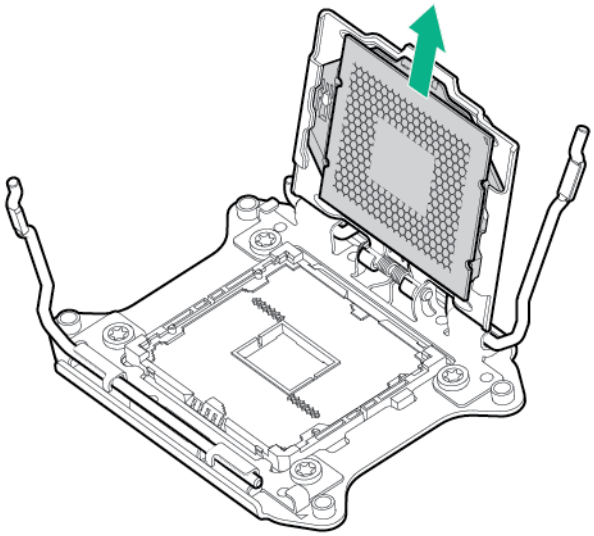

18. Install the processor socket protective cover in each processor socket.
19. Retain all of the information on the serial label pull tab for use in installing the new system board.
20. Remove the enclosure connector cover from the new system board and install the enclosure connector cover on the damaged system board.

To replace the system board:

1. Place the new server blade system board with base pan on a flat, level surface.

IMPORTANT: Install all components in the same configuration prior to removing the system board.

2. If the server blade had only one processor installed, install the heatsink blank in processor socket 2.
3. Open each of the processor locking levers in the order indicated, and then open the processor retaining bracket.

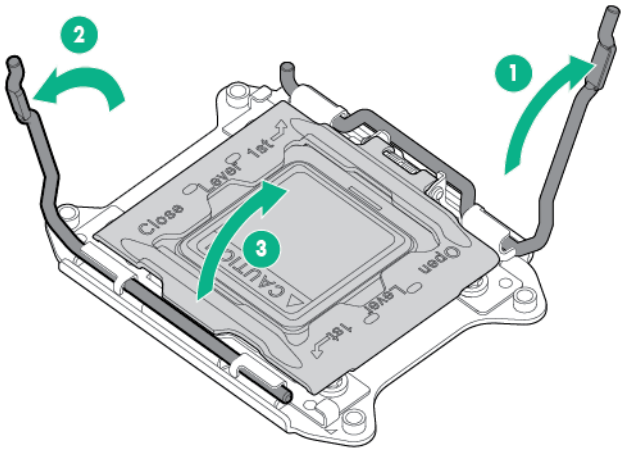

4. Remove the clear processor socket cover. Retain the processor socket cover for future use.

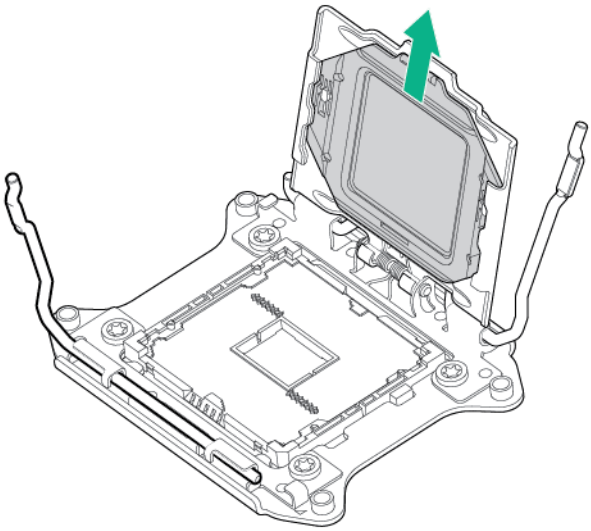

5. Install the processor. Verify that the processor is fully seated in the processor retaining bracket by visually inspecting the processor installation guides on either side of the processor. **THE PINS ON THE SYSTEM BOARD ARE VERY FRAGILE AND EASILY DAMAGED.**

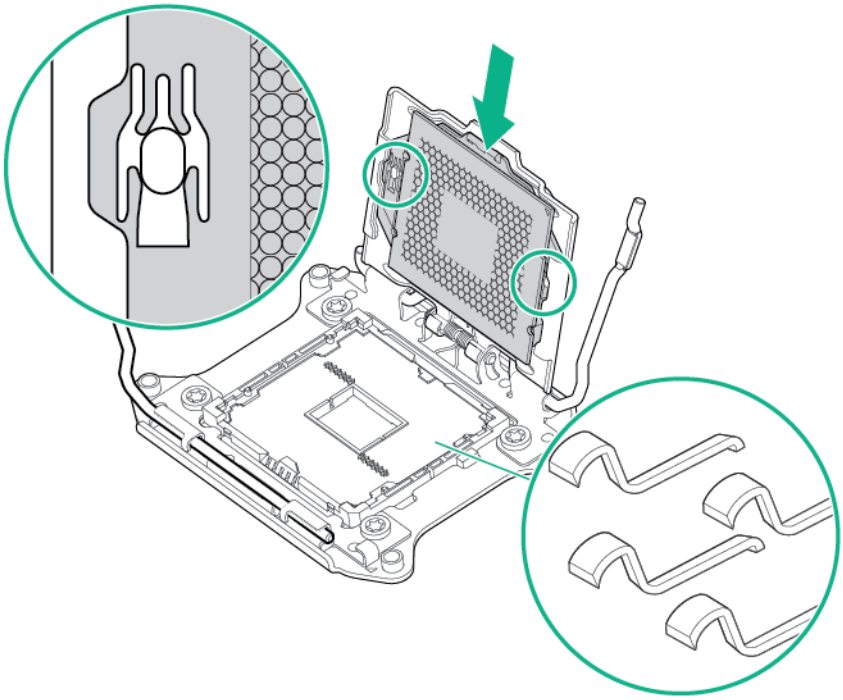

△ **CAUTION:** Do not press down on the processor. Pressing down on the processor might damage the processor socket and the system board. Press only in the area indicated on the processor retaining bracket.

△ **CAUTION:** Close and hold down the processor cover socket while closing the processor locking levers. The levers should close without resistance. Forcing the levers closed can damage the processor and socket, requiring system board replacement.

6. Close the processor retaining bracket. When the processor is installed properly inside the processor retaining bracket, the processor retaining bracket clears the flange on the front of the socket.

7. Press and hold the processor retaining bracket in place, and then close each processor locking lever. Press only in the area indicated on the processor retaining bracket.

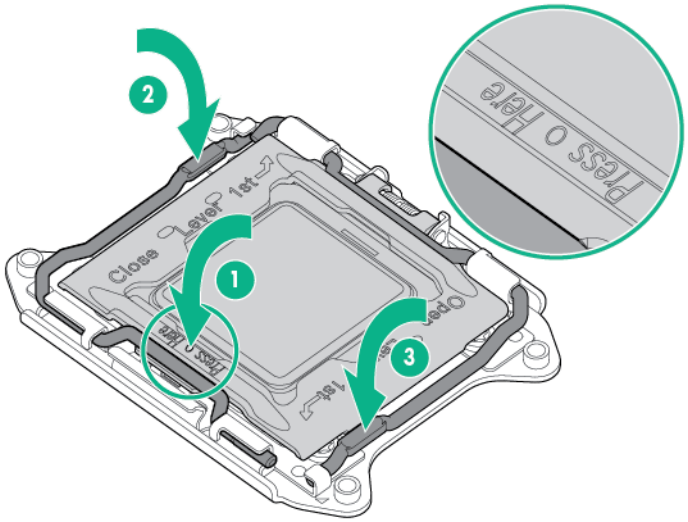

8. Install the heatsink.
9. Install the front panel/drive cage assembly.
10. Install all DIMMs.
11. Install all DIMM baffles.
12. Install the internal USB drive.
13. Do one of the following:
    - Install the storage controller/NVMe pass-through board.
    - Install the direct connect SATA cable.
14. Install the FlexibleLOM.
15. Install the mezzanine assembly.
16. Install the drives.
17. Install the drive blanks.
18. Install the access panel.
19. Install the server blade (on page 25).

Server blade release lever kit

1. Power down the server blade (on page 23).
2. Remove the server blade (on page 24).
3. Remove the access panel ("Access panel" on page 26).
4. Remove all drives ("SAS/SATA drive" on page 27, "NVMe SSD" on page 28).
5. Remove all drive blanks ("Drive blank" on page 27).
6. Remove the mezzanine assembly ("Mezzanine assembly" on page 30).
7. Do one of the following:
    - Remove the storage controller/NVMe pass-through board ("Storage controller/NVMe pass-through board" on page 34).
    - Remove the direct connect SATA cable ("Direct connect SATA cable" on page 29).

8. Remove the internal USB drive, if installed. To locate the internal USB connector, see "System board components (on page 69)."
9. Remove all DIMM baffles ("DIMM baffles" on page 35).
10. Remove the heatsink blank, if installed ("Heatsink blank" on page 34).
11. Remove the front panel/hard drive cage assembly.
12. While holding the system board in place, turn the base pan on its side and remove the two system board screws from the bottom of the base pan.

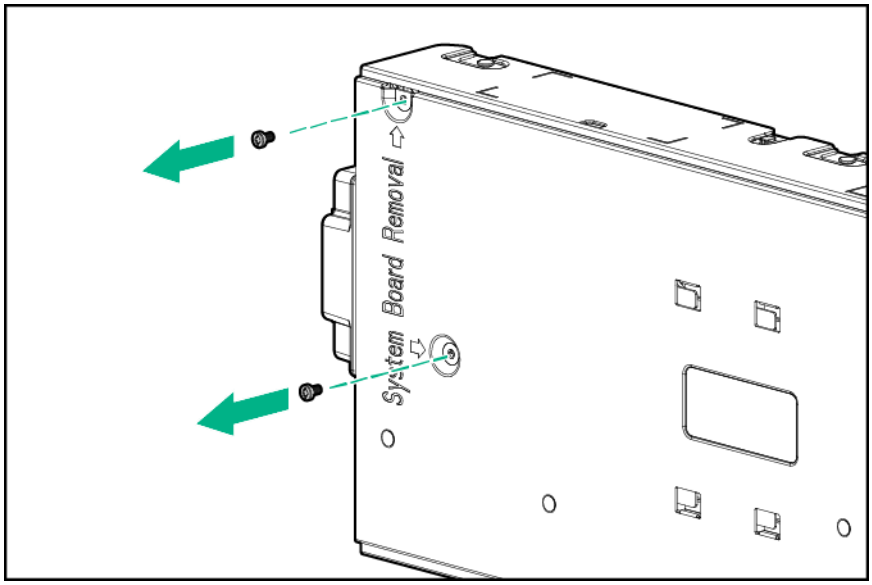

13. Place the server blade on a flat, level surface.
14. Slide the system board approximately 1.27 cm (0.50 inches) towards the rear of the server and lift the system board from the base pan.

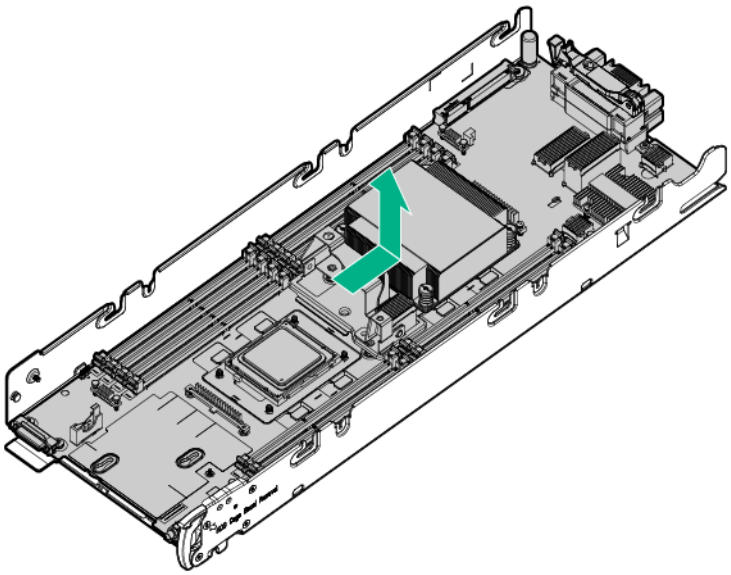

15. Remove the three T-10 screws from the outside of the base pan, and then remove the server blade release lever assembly.

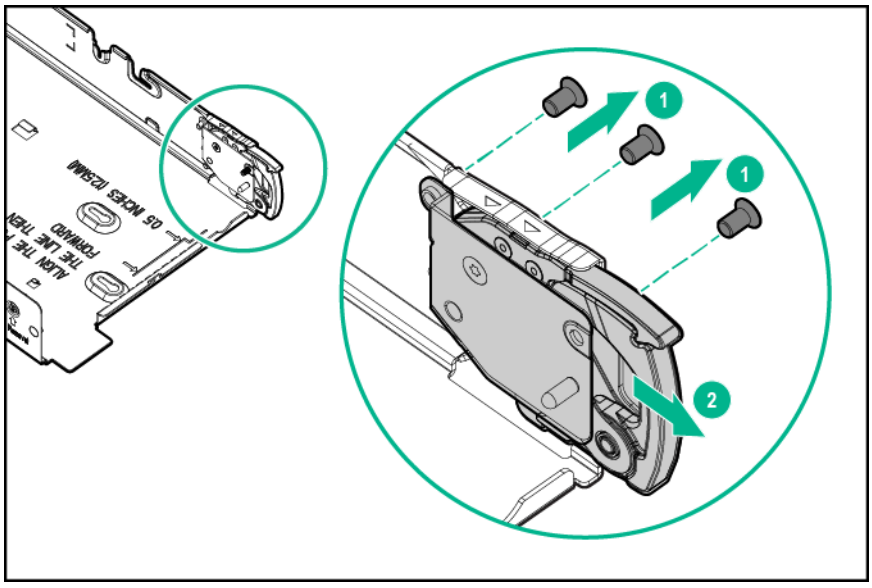

To replace the server blade release lever kit:

1. Install the server blade release lever bracket.

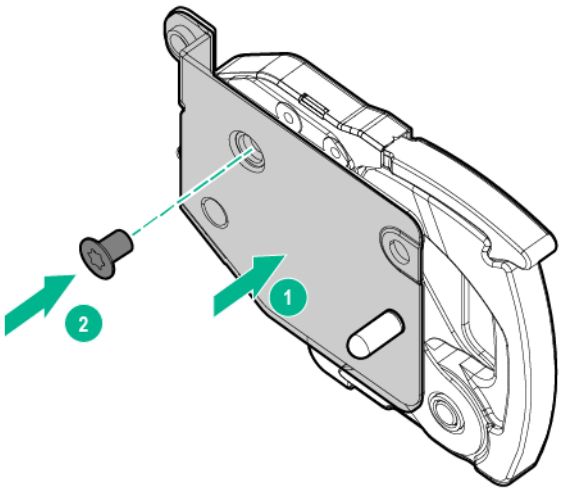

2. Install the server blade release lever assembly, and then install the T-10 screws from the outside of the base pan.

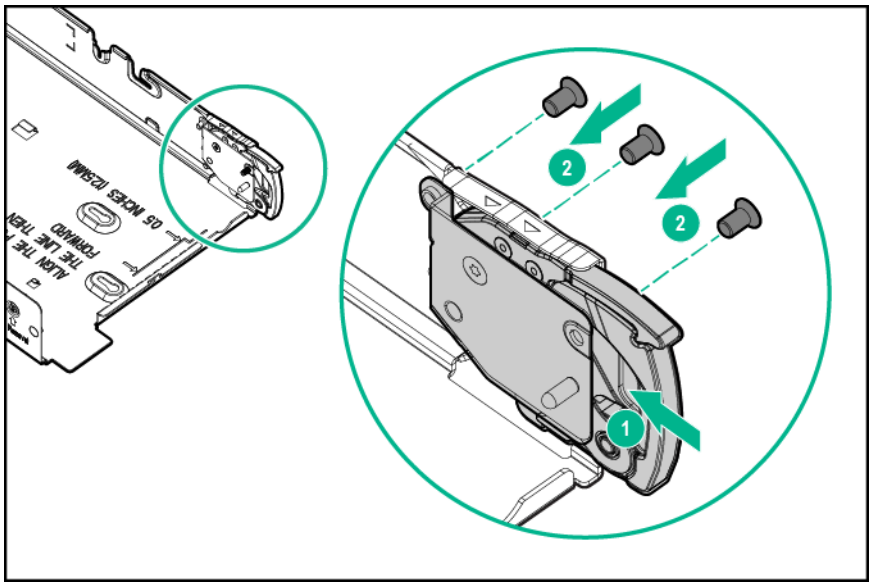

3. Align the system board, and then slide it into place inside the base pan.

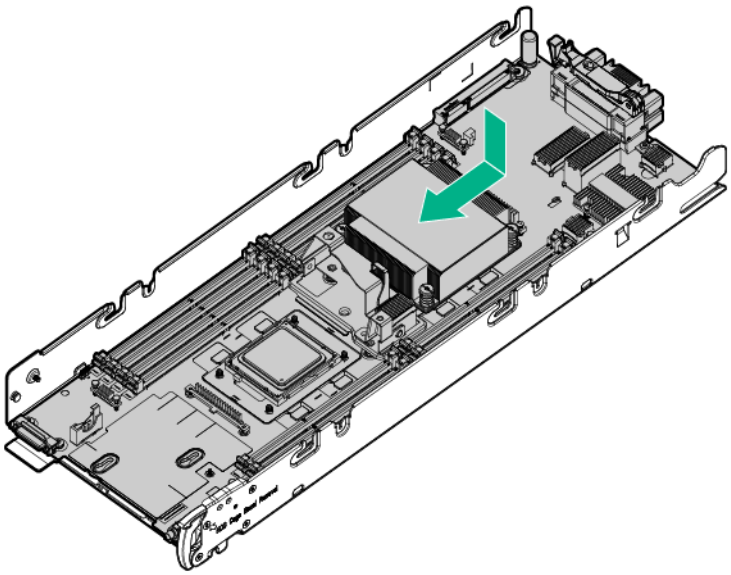

4. While holding the system board in place, turn the base pan on the side and install the two screws on the bottom of the base pan.

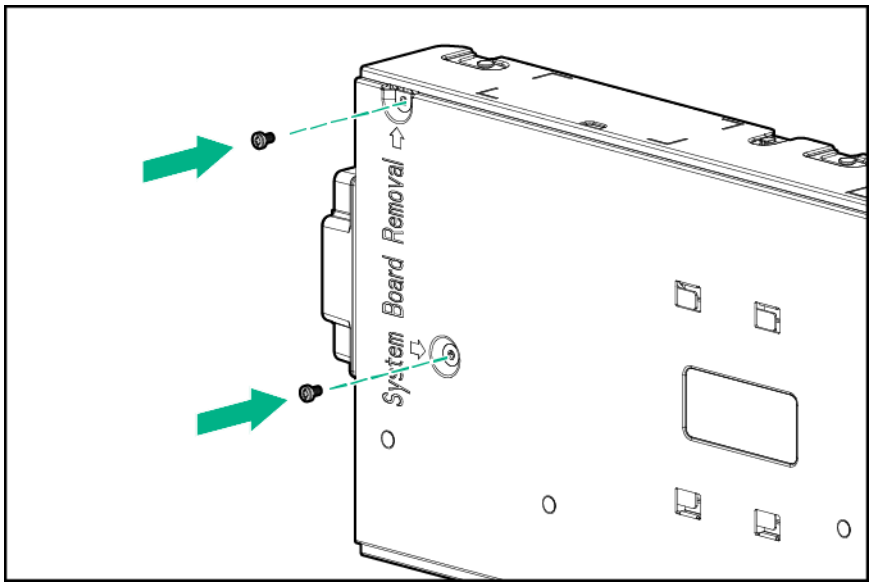

5. Place the server blade on a flat level surface.

IMPORTANT: Install all components in the same configuration prior to removing the system board.

6. Install the front panel/drive cage assembly.
7. Install the heatsink blank.
8. Install the storage controller or connect the direct connect SATA cable.
9. Install all DIMM baffles.
10. Install the internal USB drive.
11. Install the drives.
12. Install the drive blanks,
13. Install the access panel.

HPE Trusted Platform Module

The TPM is not a customer-removable part.

CAUTION: Any attempt to remove an installed TPM from the system board breaks or disfigures the TPM security rivet. Upon locating a broken or disfigured rivet on an installed TPM, administrators should consider the system compromised and take appropriate measures to ensure the integrity of the system data.

If you suspect a TPM board failure, leave the TPM installed and remove the system board. Contact a Hewlett Packard Enterprise authorized service provider for a replacement system board and TPM board.

Troubleshooting

Troubleshooting resources

The *HPE ProLiant Gen9 Troubleshooting Guide, Volume I: Troubleshooting* provides procedures for resolving common problems and comprehensive courses of action for fault isolation and identification, issue resolution, and software maintenance on ProLiant servers and server blades. To view the guide, select a language:

- English (**http://www.hpe.com/support/Gen9_TSG_en**)
- French (**http://www.hpe.com/support/Gen9_TSG_fr**)
- Spanish (**http://www.hpe.com/support/Gen9_TSG_es**)
- German (**http://www.hpe.com/support/Gen9_TSG_de**)
- Japanese (**http://www.hpe.com/support/Gen9_TSG_ja**)
- Simplified Chinese (**http://www.hpe.com/support/Gen9_TSG_zh_cn**)

The *HPE ProLiant Gen9 Troubleshooting Guide, Volume II: Error Messages* provides a list of error messages and information to assist with interpreting and resolving error messages on ProLiant servers and server blades. To view the guide, select a language:

- English (**http://www.hpe.com/support/Gen9_EMG_en**)
- French (**http://www.hpe.com/support/Gen9_EMG_fr**)
- Spanish (**http://www.hpe.com/support/Gen9_EMG_es**)
- German (**http://www.hpe.com/support/Gen9_EMG_de**)
- Japanese (**http://www.hpe.com/support/Gen9_EMG_ja**)
- Simplified Chinese (**http://www.hpe.com/support/Gen9_EMG_zh_cn**)

Diagnostic tools

Product QuickSpecs

For more information about product features, specifications, options, configurations, and compatibility, see the product QuickSpecs on the Hewlett Packard Enterprise website (**http://www.hpe.com/info/qs**).

HPE iLO

iLO is a remote server management processor embedded on the system boards of HPE ProLiant and Synergy servers. iLO enables the monitoring and controlling of servers from remote locations. HPE iLO management is a powerful tool that provides multiple ways to configure, update, monitor, and repair servers remotely. iLO (Standard) comes preconfigured on HPE servers **without an additional cost or license**.

Features that enhance server administrator productivity are licensed. For more information, see the iLO documentation on the Hewlett Packard Enterprise website (**http://www.hpe.com/info/ilo-docs**).

Active Health System

The Active Health System monitors and records changes in the server hardware and system configuration.

The Active Health System provides:

- Continuous health monitoring of over 1600 system parameters
- Logging of all configuration changes
- Consolidated health and service alerts with precise time stamps
- Agentless monitoring that does not affect application performance

The Agentless Management Service is available in the SPP, which can be downloaded from the Hewlett Packard Enterprise website (**http://www.hpe.com/servers/spp/download**). The Active Health System log can be downloaded manually from iLO 4 or Intelligent Provisioning and sent to Hewlett Packard Enterprise.

For more information, see the following documents:

- *iLO User Guide* on the Hewlett Packard Enterprise website (**http://www.hpe.com/info/ilo/docs**)
- *Intelligent Provisioning User Guide* on the Hewlett Packard Enterprise website (**http://www.hpe.com/info/intelligentprovisioning/docs**)

iLO RESTful API support

HPE iLO 4 firmware version 2.00 and later includes the iLO RESTful API. The iLO RESTful API is a management interface that server management tools can use to perform configuration, inventory, and monitoring of the ProLiant server via iLO. The iLO RESTful API uses basic HTTPS operations (GET, PUT, POST, DELETE, and PATCH) to submit or return JSON-formatted data with iLO web server.

HPE iLO 4 2.30 and later is Redfish 1.0-conformant while remaining backward compatible with the existing iLO RESTful API.

HPE iLO 4 supports the iLO RESTful API with ProLiant Gen8 and later servers. For more information about the iLO RESTful API, see the Hewlett Packard Enterprise website (**http://www.hpe.com/info/restfulinterface/docs**).

Integrated Management Log

The IML records hundreds of events and stores them in an easy-to-view form. The IML timestamps each event with 1-minute granularity.

You can view recorded events in the IML in several ways, including the following:

- From within HPE SIM
- From within the UEFI System Utilities (on page 59)
- From within the Embedded UEFI shell
- From within operating system-specific IML viewers:
  - For Windows: IML Viewer
  - For Linux: IML Viewer Application
- From within the iLO web interface
- From within Insight Diagnostics (on page 60)

UEFI System Utilities

The UEFI System Utilities is embedded in the system ROM. The UEFI System Utilities enable you to perform a wide range of configuration activities, including:

- Configuring system devices and installed options
- Enabling and disabling system features
- Displaying system information
- Selecting the primary boot controller
- Configuring memory options
- Selecting a language
- Launching other preboot environments such as the Embedded UEFI Shell and Intelligent Provisioning

For more information, see the UEFI System Utilities user guide for your product on the Hewlett Packard Enterprise website (**http://www.hpe.com/info/UEFI/docs**).

To access mobile-ready online help for the UEFI System Utilities and UEFI Shell, scan the QR code at the bottom of the screen. For on-screen help, press the **F1** key.

Using UEFI System Utilities

To use the System Utilities, use the following keys.

Action	Key
Access System Utilities	F9 during server POST
Navigate menus	Up and Down arrows
Select items	Enter
Save selections	F10

Action	Key
Access Help for a highlighted configuration option*	F1

*Scan the QR code on the screen to access online help for the UEFI System Utilities and UEFI Shell.

Default configuration settings are applied to the server at one of the following times:

- Upon the first system power-up
- After defaults have been restored

Default configuration settings are sufficient for typical server operations; however, you can modify configuration settings as needed. The system prompts you for access to the UEFI System Utilities each time the system is powered up.

Embedded Diagnostics option

The system BIOS in all ProLiant Gen9 servers includes an Embedded Diagnostics option in the ROM. The Embedded Diagnostics option can run comprehensive diagnostics of the server hardware, including processors, memory, drives, and other server components.

For more information on the Embedded Diagnostics option, see the UEFI System Utilities user guide for your server blade on the Hewlett Packard Enterprise website (**http://www.hpe.com/info/UEFI/docs**).

Re-entering the server serial number and product ID

After you replace the system board, you must re-enter the server blade serial number and the product ID:

1. During the server blade startup sequence, press the **F9** key to access UEFI System Utilities.
2. Select **System Configuration** > **BIOS/Platform Configuration (RBSU)** > **Advanced Options** > **Advanced System ROM Options** > **Serial Number**, and then press the **Enter** key.
3. Enter the serial number and press the **Enter** key.

   The following message appears:

   ```
   The serial number should only be modified by qualified service personnel.
   This value should always match the serial number located on the chassis.
   ```
4. To clear the warning, press the **Enter** key.
5. Enter the serial number and press the **Enter** key.
6. Select **Product ID**.

   The following warning appears:

   ```
   Warning: The Product ID should ONLY be modified by qualified service
   personnel. This value should always match the Product ID located on the
   chassis.
   ```
7. Enter the product ID and press the **Enter** key.
8. To confirm exiting System Utilities, press the **F10** key.

   The server blade automatically reboots.

Insight Diagnostics

The Insight Diagnostics is a proactive server blade management tool, available in both offline and online versions. The tool provides diagnostics and troubleshooting capabilities to assist IT administrators who verify server blade installations, troubleshoot problems, and perform repair validation.

The Insight Diagnostics Offline Edition performs various in-depth system and component testing while the OS is not running. To run this utility, boot the server blade using Intelligent Provisioning.

The Insight Diagnostics Online Edition is a web-based application that captures system configuration and other related data needed for effective server blade management. Available in Microsoft Windows and Linux versions, the utility helps to ensure proper system operation.

For more information or to download the utility, see the Hewlett Packard Enterprise website (**http://www.hpe.com/info/InsightDiagnostics**). The Insight Diagnostics Online Edition is also available in the SPP.

Insight Diagnostics survey functionality

Insight Diagnostics (on page 60) provides survey functionality that gathers critical hardware and software information on ProLiant server blades.

This functionality supports operating systems that the server blade supports. For operating systems supported by the server blade, see the Hewlett Packard Enterprise website (**http://www.hpe.com/info/supportos**).

If a significant change occurs between data-gathering intervals, the survey function marks the previous information and overwrites the survey data files to reflect the latest changes.

Survey functionality is installed with every Intelligent Provisioning-assisted Insight Diagnostics installation, or it can be installed through the SPP.

HPE Insight Remote Support

Hewlett Packard Enterprise strongly recommends that you register your device for remote support to enable enhanced delivery of your Hewlett Packard Enterprise warranty, HPE support services, or Hewlett Packard Enterprise contractual support agreement. Insight Remote Support supplements your monitoring continuously to ensure maximum system availability by providing intelligent event diagnosis, and automatic, secure submission of hardware event notifications to Hewlett Packard Enterprise, which will initiate a fast and accurate resolution, based on your product's service level. Notifications can be sent to your authorized Hewlett Packard Enterprise Channel Partner for onsite service, if configured and available in your country.

For more information, see *Insight Remote Support and Insight Online Setup Guide for ProLiant Servers and BladeSystem c-Class Enclosures* on the Hewlett Packard Enterprise website (**http://www.hpe.com/info/insightremotesupport/docs**). Insight Remote Support is available as part of Hewlett Packard Enterprise Warranty, HPE support services, or Hewlett Packard Enterprise contractual support agreement.

USB support

Hewlett Packard Enterprise server blades support both USB 2.0 ports and USB 3.0 ports. Both port types support installing all types of USB devices (USB 1.0, USB 2.0, and USB 3.0), but might run at lower speeds in specific situations:

- USB 3.0 capable devices operate at USB 2.0 speeds when installed in a USB 2.0 port.
- In UEFI Boot Mode, Hewlett Packard Enterprise provides legacy USB support in the preboot environment before the operating system loading for USB 1.0, USB 2.0, and USB 3.0 speeds.
- In Legacy BIOS Boot Mode, Hewlett Packard Enterprise provides legacy USB support in the preboot environment before the operating system loading for USB 1.0 and USB 2.0 speeds. USB 3.0 ports can be used with all devices in Legacy BIOS Boot Mode but are not available at USB 3.0 speeds in the preboot environment. Standard USB support (USB support from within the operating system) is provided by the OS through the appropriate USB device drivers. Support for USB 3.0 varies by operating system.

For maximum compatibility of USB 3.0 devices with all operating systems, Hewlett Packard Enterprise provides a configuration setting for USB 3.0 Mode. Auto is the default setting. This setting impacts USB 3.0 devices when connected to USB 3.0 ports in the following manner:

- **Auto (default)**—If configured in Auto Mode, USB 3.0 capable devices operate at USB 2.0 speeds in the preboot environment and during boot. When a USB 3.0 capable OS USB driver loads, USB 3.0 devices transition to USB 3.0 speeds. This mode is compatible with operating systems that do not support USB 3.0 while allowing USB 3.0 devices to operate at USB 3.0 speeds with state-of-the-art operating systems.
- **Enabled**—If Enabled, USB 3.0 capable devices operate at USB 3.0 speeds at all times (including the preboot environment) when in UEFI Boot Mode. Do not use this mode with operating systems that do not support USB 3.0. If operating in Legacy Boot BIOS Mode, the USB 3.0 ports cannot function in the preboot environment and are not bootable.
- **Disabled**—If configured for Disabled, USB 3.0 capable devices function at USB 2.0 speeds at all times.

The pre-OS behavior and default operation of the USB ports is configurable in the UEFI System Utilities. For more information, see the UEFI System Utilities user guide for your product on the Hewlett Packard Enterprise website (**http://www.hpe.com/info/UEFI/docs**).

External USB functionality

Hewlett Packard Enterprise provides external USB support to enable local connection of USB devices for server blade administration, configuration, and diagnostic procedures.

For additional security, external USB functionality can be disabled through USB options in UEFI System Utilities.

HPE Smart Storage Administrator

The HPE SSA is a configuration and management tool for HPE Smart Array controllers. Starting with HPE ProLiant Gen8 servers, HPE SSA replaces ACU with an enhanced GUI and additional configuration features.

The HPE SSA exists in three interface formats: the HPE SSA GUI, the HPE SSA CLI, and HPE SSA Scripting. Although all formats provide support for configuration tasks, some of the advanced tasks are available in only one format.

Some HPE SSA features include the following:

- Supports online array capacity expansion, logical drive extension, assignment of online spares, and RAID or stripe size migration
- Provides diagnostic and SmartSSD Wear Gauge functionality on the Diagnostics tab
- For supported controllers, provides access to additional features.

For more information about HPE SSA, see the Hewlett Packard Enterprise website (**http://www.hpe.com/servers/ssa**).

Automatic Server Recovery

ASR is a feature that causes the system to restart when a catastrophic operating system error occurs, such as a blue screen, ABEND (does not apply to HPE ProLiant DL980 Servers), or panic. A system fail-safe timer, the ASR timer, starts when the System Management driver, also known as the Health Driver, is loaded. When the operating system is functioning properly, the system periodically resets the timer. However, when the operating system fails, the timer expires and restarts the server.

ASR increases server availability by restarting the server within a specified time after a system hang. At the same time, the SIM console notifies you by sending a message to a designated pager number that ASR has restarted the system. You can disable ASR from the System Management Homepage or through RBSU.

Component identification

Front panel components

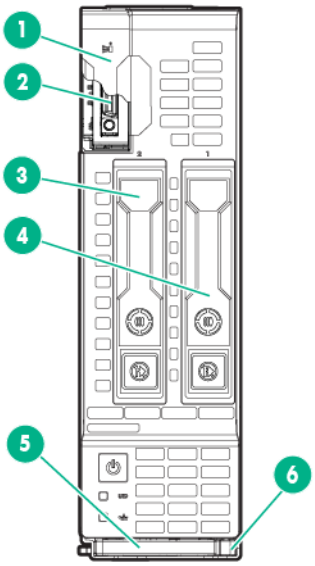

Item	Description
1	Serial label pull tab
2	HPE c-Class Blade SUV connector* (behind the serial label pull tab)
3	Drive bay 2
4	Drive bay 1
5	Server blade release lever
6	Server blade release button

*The SUV connector and the c-Class Blade SUV Cable are used for some server blade configuration and diagnostic procedures.

Front panel LEDs and buttons

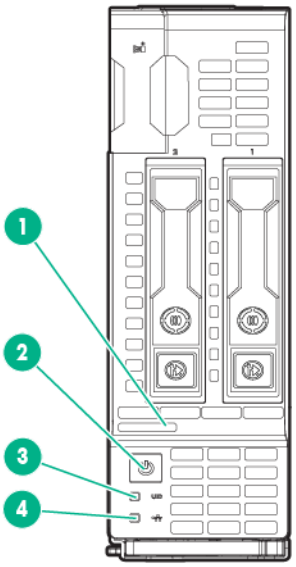

Item	Description	Status
1	Health LED	Solid green = Normal Flashing green (1 flash per second) = iLO is rebooting Flashing amber = System degraded Flashing red (1 flash per second) = System critical If the health LED indicates a degraded or critical state, review the system IML ("Integrated Management Log" on page 59) or use iLO ("HPE iLO" on page 58) to review the system health status.
2	Power On/Standby button and system power LED	Solid green = System on Flashing green (1 flash per second) = Performing power on sequence Solid amber = System in standby Off = No power present Facility power is not present, power cord is not attached, no power supplies are installed, power supply failure has occurred, or the front I/O cable is disconnected.
3	UID LED	Solid blue = Activated Flashing blue: • 1 flash per second = Remote management or firmware upgrade in progress • 4 flashes per second = iLO manual reboot sequence initiated • 8 flashes per second = iLO manual reboot sequence in progress Off = Deactivated
4	NIC status LED	Solid green = Link to network Flashing green (1 flash per second) = Network active Off = No network activity

When all four LEDs described in this table flash simultaneously, a power fault has occurred. For more information, see "Front panel LED power fault codes (on page 65)."

Front panel LED power fault codes

The following table provides a list of power fault codes, and the subsystems that are affected. Not all power faults are used by all server blades.

Subsystem	Front panel LED behavior
System board	1 flash
Processor	2 flashes
Memory	3 flashes
Riser board PCIe slots	4 flashes
FlexibleLOM	5 flashes
Removable HPE Flexible Smart Array controller/Smart SAS HBA controller	6 flashes
System board PCIe slots	7 flashes
Power backplane or storage backplane	8 flashes
Power supply	9 flashes

For more information, see "Front panel LEDs and buttons (on page 65)."

Serial label pull tab information

The serial label pull tab is located on the front panel of the server blade. To locate the serial label pull tab, see "Front panel components (on page 64)." The serial label pull tab provides the following information:

- Product serial number
- HPE iLO information
- QR code that points to mobile-friendly documentation

Drive numbering

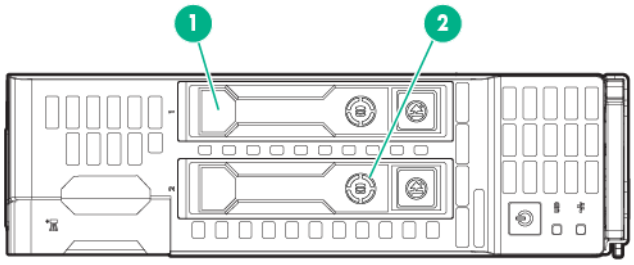

Item	Description
1	Drive bay 1
2	Drive bay 2

Hot-plug drive LED definitions

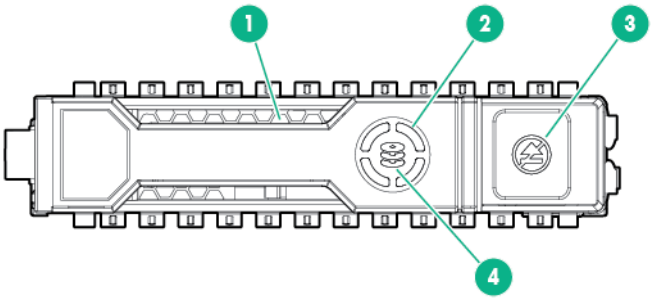

Item	LED	Status	Definition
1	Locate	Solid blue	The drive is being identified by a host application.
		Flashing blue	The drive carrier firmware is being updated or requires an update.
2	Activity ring	Rotating green	Drive activity
		Off	No drive activity
3	Do not remove	Solid white	Do not remove the drive. Removing the drive causes one or more of the logical drives to fail.
		Off	Removing the drive does not cause a logical drive to fail.
4	Drive status	Solid green	The drive is a member of one or more logical drives.
		Flashing green	The drive is rebuilding or performing a RAID migration, strip size migration, capacity expansion, or logical drive extension, or is erasing.
		Flashing amber/green	The drive is a member of one or more logical drives and predicts the drive will fail.
		Flashing amber	The drive is not configured and predicts the drive will fail.
		Solid amber	The drive has failed.
		Off	The drive is not configured by a RAID controller.

IMPORTANT: The Dynamic Smart Array B140i Controller is only available in UEFI Boot Mode. It cannot be enabled in Legacy BIOS Boot Mode. If the B140i controller is disabled, drives connected to the system board Mini-SAS connectors operate in AHCI or Legacy mode. Under this condition:

- The drives cannot be a part of a hardware RAID or a logical drive.
- The Locate, Drive status, and Do not remove LEDs of the affected drives are not controlled and will retain their last configured state. HPE SmartDrives preserve the last configured state across power cycles.

NVMe SSD components

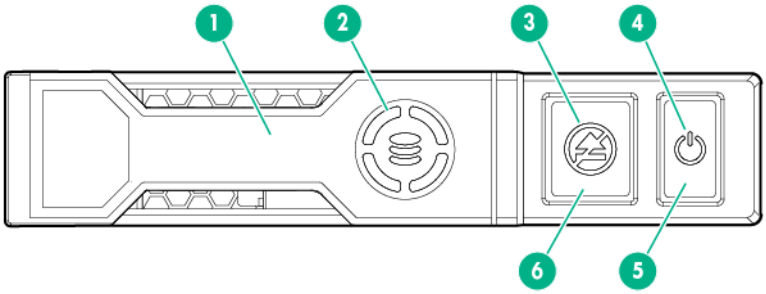

Item	Component	Status	Definition
1	Release lever	—	Ejects the NVMe drive carrier from the cage.
2	Activity ring LED	Rotating green Off	Drive activity No drive activity
3	Do Not Remove LED	Solid white Flashing white Off	Drive is powered on, and configured in system. Do not remove the drive. Ejection request pending. Do not remove the drive. Drive removed from the PCIe bus, and can be ejected.
4	Power LED	Solid green Flashing green Off	Drive is powered on, and configured in system. Do not remove the drive. Ejection request pending. Do not remove the drive. Drive removed from the PCIe bus, and can be ejected.
5	Power button	—	Momentary press to request drive removal from PCIe bus and ejection. Drive removal request can be denied by operating system.
6	Do Not Remove button	—	Releases the release lever for removal and insertion.

Upon NVMe SSD insertion, an LED initiation sequence will be visible - lighting each LED in the carrier in sequence from left to right. The sequence will cycle until the drive is recognized by the system. When the SSD is recognized by the system - the Do Not Remove LED will be solid white and the Power LED will be solid green.

System board components

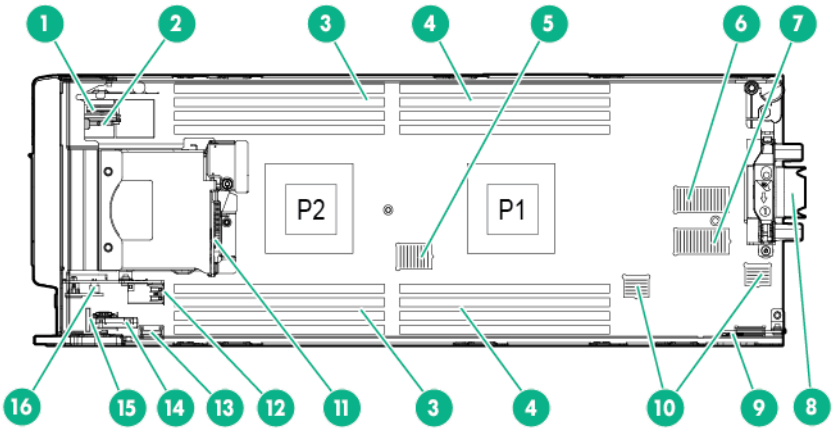

Item	Description
1	System battery
2	Solid state device connector (M.2)
3	Processor 2 DIMM slots (8)
4	Processor 1 DIMM slots (8)
5	SAS/SATA controller or NVMe pass-through board connector
6	Mezzanine connector 1 (Type A mezzanine only)
7	Mezzanine connector 2 (Type A or Type B mezzanine)
8	Enclosure connector
9	MicroSD card slot
10	FlexibleLOM connectors (2)
11	SAS/SATA or NVMe backplane
12	Internal USB 3.0 connector
13	Smart Storage Battery connector
14	Direct-connect SATA connector
15	System maintenance switch
16	TPM connector

System maintenance switch

Position	Default	Function
S1	Off	Off = iLO security is enabled. On = iLO security is disabled.
S2	Off	Off = System configuration can be changed. On = System configuration is locked.
S3	Off	Reserved
S4	Off	Reserved

Position	Default	Function
S5	Off	Off = Power-on password is enabled. On = Power-on password is disabled.
S6	Off	Off = No function. On = ROM reads system configuration as invalid.
S7	Off	Off = Set default boot mode to UEFI. On = Set default boot mode to legacy.
S8	—	Reserved
S9	Off	Off = BL460 On = WS460
S10	—	Reserved
S11	—	Reserved
S12	—	Reserved

You can access the redundant ROM by setting S1, S5, and S6 to On.

When the system maintenance switch position 6 is set to the On position, the system is prepared to erase all system configuration settings from both CMOS and NVRAM.

△ **CAUTION:** Clearing CMOS, NVRAM, or both deletes configuration information. Be sure to configure the server blade properly to prevent data loss.

Mezzanine connector definitions

Item	PCIe
Mezzanine connector 1	x16, Type A mezzanine card only
Mezzanine connector 2*	x16, Type A or B mezzanine card

*When installing a mezzanine option on mezzanine connector 2, processor 2 must be installed.

DIMM slot locations

DIMM slots are numbered sequentially (1 through 8) for each processor. The supported AMP modes use the alpha assignments for population order, and the slot numbers designate the DIMM slot ID for spare replacement.

The arrow points to the front of the server blade.

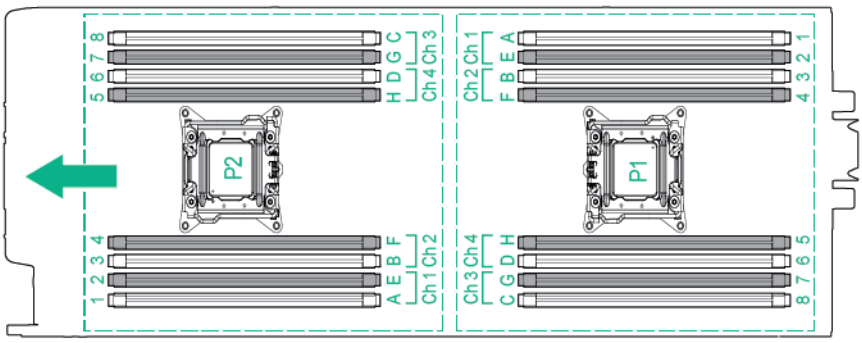

DIMM identification

To determine DIMM characteristics, see the label attached to the DIMM and refer to the following illustration and table.

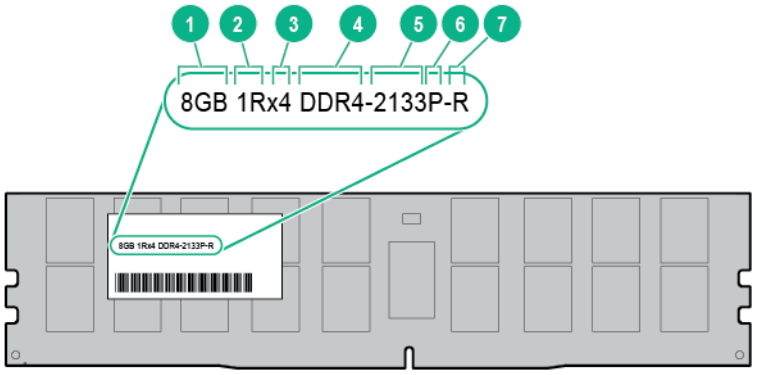

Item	Description	Definition
1	Capacity	8 GB 16 GB 32 GB 64 GB
2	Rank	1R = Single-rank 2R = Dual-rank 4R = Quad-rank
3	Data width on DRAM	x4 = 4-bit x8 = 8-bit
4	Memory generation	DDR4
5	Maximum memory speed	2133 MT/s 2400 MT/s
6	CAS latency	P=15 T=17

Item	Description	Definition
7	DIMM type	R = RDIMM (registered) L = LRDIMM (load reduced)

For more information about product features, specifications, options, configurations, and compatibility, see the product QuickSpecs on the Hewlett Packard Enterprise website (**http://www.hpe.com/info/qs**).

SUV cable connectors

CAUTION: Before disconnecting the SUV cable from the connector, always squeeze the release buttons on the sides of the connector. Failure to do so can result in damage to the equipment.

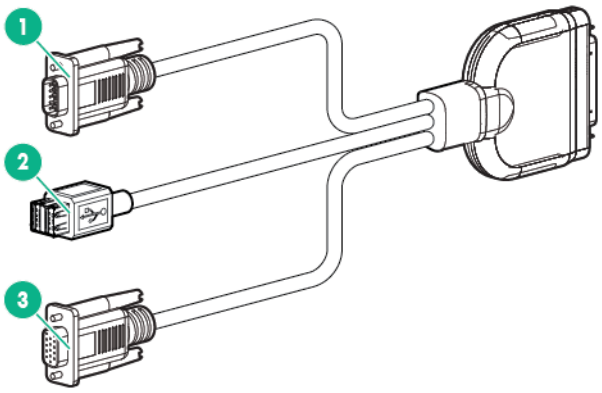

Item	Connector	Description
1	Serial	For trained personnel to connect a null modem serial cable and perform advanced diagnostic procedures
2	USB*	For connecting up to two USB devices
3	Video	For connecting a video monitor

*The USB connectors on the SUV cable do not support devices that require greater than a 500mA power source.

Cabling

Cabling resources

Cabling configurations and requirements vary depending on the product and installed options. For more information about product features, specifications, options, configurations, and compatibility, see the product QuickSpecs on the Hewlett Packard Enterprise website (**http://www.hpe.com/info/qs**).

HPE Smart Storage Battery cabling

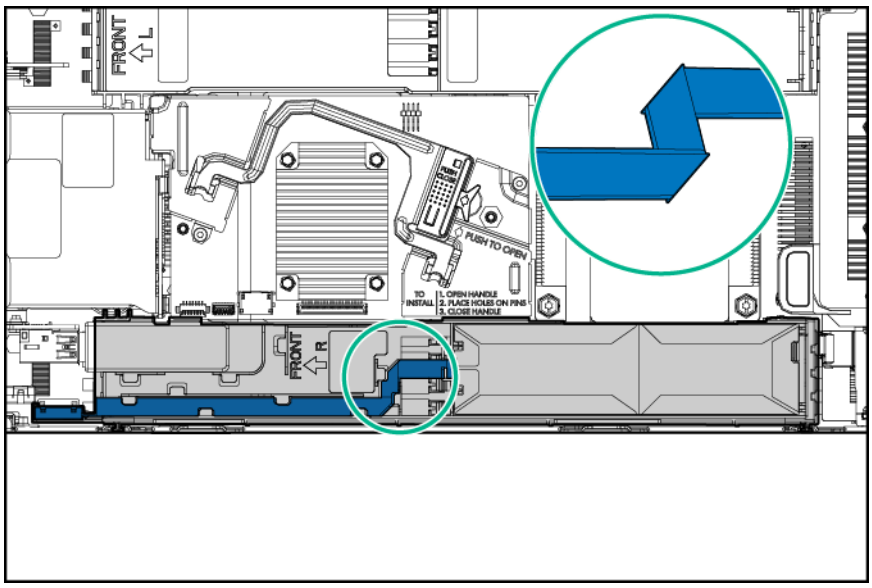

Direct connect SATA cabling

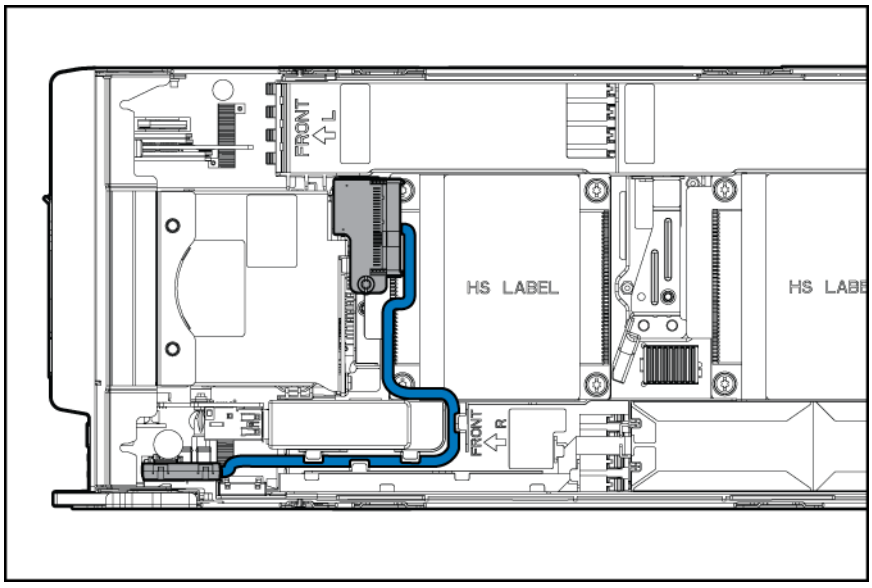

Using the HPE c-Class Blade SUV Cable

The c-Class Blade SUV Cable enables the user to perform server blade administration, configuration, and diagnostic procedures by connecting video and USB devices directly to the server blade. For SUV cable connectors, see "SUV cable connectors (on page 72)."

Connecting locally to a server blade with video and USB devices

Use the SUV cable to connect a monitor and any of the following USB devices:

- USB hub
- USB keyboard
- USB mouse
- USB CD/DVD-ROM drive

Numerous configurations are possible. This section offers two possible configurations. For more information, see "USB support (on page 61)."

The USB connectors on the SUV cable do not support devices that require greater than a 500mA power source.

Accessing a server blade with local KVM

For this configuration, a USB hub is not necessary. To connect additional devices, use a USB hub.

> △ **CAUTION:** Before disconnecting the SUV cable from the connector, always squeeze the release buttons on the sides of the connector. Failure to do so can result in damage to the equipment.

1. Open the serial label pull tab and connect the c-Class Blade SUV Cable to the server blade.
2. Connect the video connector to a monitor.
3. Connect a USB mouse to one USB connector.
4. Connect a USB keyboard to the second USB connector.

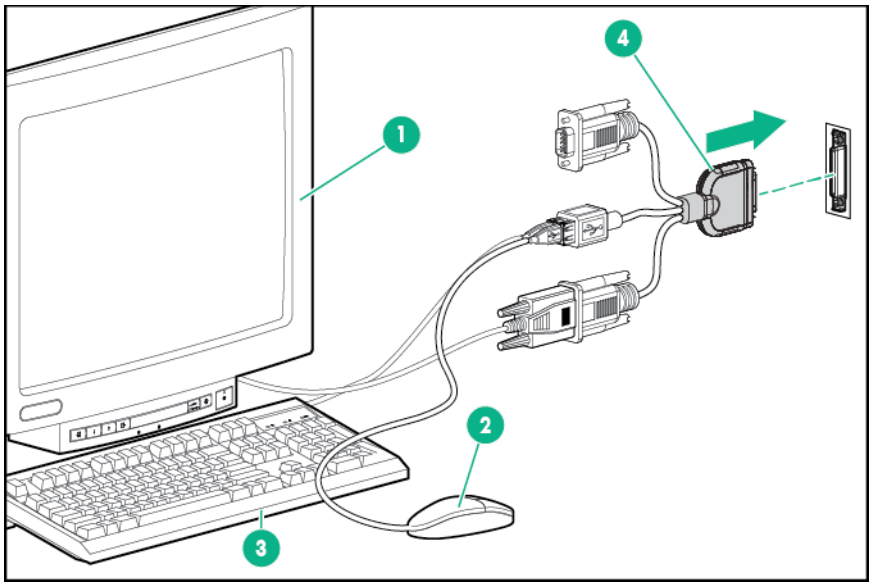

Item	Description
1	Monitor
2	USB mouse
3	USB keyboard
4	c-Class Blade SUV Cable

Accessing local media devices

Use the following configuration when configuring a server blade or loading software updates and patches from a USB CD/DVD-ROM.

Use a USB hub when connecting a USB CD-ROM drive to the server blade. The USB connectors on the SUV cable do not support devices that require greater than a 500mA power source. The USB hub provides additional connections and the power required to support USB keys or external drives that require more than 500mA at 5V.

1. Open the serial label pull tab and connect the c-Class Blade SUV cable to the server blade.
2. Connect the video connector to a monitor.
3. Connect a USB hub to one USB connector.
4. Connect the following to the USB hub:
   - USB CD/DVD-ROM drive
   - USB keyboard
   - USB mouse

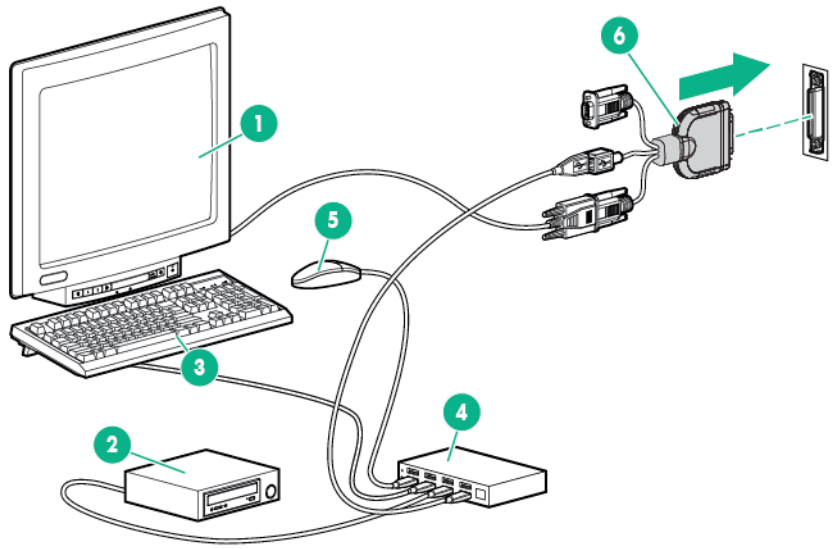

Item	Description
1	Monitor
2	USB CD/DVD-ROM drive
3	USB keyboard
4	USB hub
5	USB mouse
6	c-Class Blade SUV Cable

Specifications

Environmental specifications

Specification	Value
Temperature range*	—
Operating	10°C to 35°C (50°F to 95°F)
Non-operating	-30°C to 60°C (-22°F to 140°F)
Relative humidity (noncondensing)**	—
Operating	10% to 90% @ 28°C (82.4°F)
Non-operating	5% to 95% @ 38.7°C (101.7°F)
Altitude†	—
Operating	3050 m (10,000 ft)
Non-operating	9144 m (30,000 ft)

* The following temperature conditions and limitations apply:
  - All temperature ratings shown are for sea level.
  - An altitude derating of 1°C per 304.8 m (1.8°F per 1,000 ft) up to 3048 m (10,000 ft) applies.
  - No direct sunlight is allowed.
  - The maximum permissible rate of change is 10°C/hr (18°F/hr).
  - The type and number of options installed might reduce the upper temperature and humidity limits.
  - Operating with a fan fault or above 30°C (86°F) might reduce system performance.

** Storage maximum humidity of 95% is based on a maximum temperature of 45°C (113°F).

† Maximum storage altitude corresponds to a minimum pressure of 70 kPa (10.1 psia).

Server blade specifications

Specification	Value
Height	180.70 mm (7.11 in)
Depth	517.51mm (20.37 in)
Width	55.37 mm (2.18 in)
Weight (maximum)	6.33 kg (13.96 lb)
Weight (minimum)	4.50 kg (9.90 lb)

Acronyms and abbreviations

ACU
Array Configuration Utility

AMP
Advanced Memory Protection

API
application program interface

ASR
Automatic Server Recovery

CSR
certificate signing request

SUM
Smart Update Manager

HPE SSA
HPE Smart Storage Administrator

iLO
Integrated Lights-Out

IML
Integrated Management Log

JSON
JavaScript Object Notation

KVM
keyboard, video, and mouse

NVMe
non-volatile memory express

PCIe
Peripheral Component Interconnect Express

POST

Power-On Self-Test

RBSU

ROM-Based Setup Utility

REST

representational state transfer

SAS

serial attached SCSI

SPP

Service Pack for ProLiant

SUV

serial, USB, video

TPM

Trusted Platform Module

UEFI

Unified Extensible Firmware Interface

USB

universal serial bus

VCA

Version Control Agent

VCRM

Version Control Repository Manager

Documentation feedback

Hewlett Packard Enterprise is committed to providing documentation that meets your needs. To help us improve the documentation, send any errors, suggestions, or comments to Documentation Feedback (**mailto:docsfeedback@hpe.com**). When submitting your feedback, include the document title, part number, edition, and publication date located on the front cover of the document. For online help content, include the product name, product version, help edition, and publication date located on the legal notices page.

Index

A

access panel 27
Active Health System 59

B

battery 38, 69, 73
buttons 65

C

cables 73, 74, 75
cabling 72, 73, 74
cabling resources 73
cabling, server 73
cautions 23
components 15, 23, 65
components, identification 15, 65
components, mechanical 15
connectors 65
controller 35
CSR (customer self repair) 5
customer self repair (CSR) 5

D

diagnostic tools 59, 60, 61, 63
diagnostics utility 61
DIMM baffles 36
DIMM slot locations 69, 71
DIMMs 37, 69, 71
direct connect SATA cable 30, 73
documentation 79
documentation feedback 79
drive bays 65
drives 68
drives, determining status of 68

E

electrostatic discharge 23
enclosure connector 69
enclosure connector cover 29, 69
environmental specifications 76
error messages 58
external USB functionality 63

F

features 65
FlexibleLOM 34
FlexibleLOM connectors 69
front panel components 65, 66
front panel LEDs 66

H

hard drive backplane connector 69
hard drive bays 65
hard drive LEDs 68
hard drives, determining status of 68
hardware kit 29, 31
heatsink 42
HPE c-Class Blade SUV Cable 65
HPE Insight Remote Support software 62

I

identifying components 65
illustrated parts catalog 15
IML (Integrated Management Log) 60
Insight Diagnostics 61, 62
Insight Diagnostics survey functionality 62
Integrated Management Log (IML) 60
internal cables 73

L

LEDs 68
LEDs, front panel 68
LEDs, hard drive 68
LEDs, SAS hard drive 68
local KVM, accessing a server blade with 74
local media devices, accessing 75

M

management tools 59
mechanical components 15
memory 71
mezzanine assembly 31
mezzanine board connectors 69
mezzanine connector definitions 70
mezzanine connectors 69, 70

N

NIC (network interface card) 69

P

part numbers 15
powering down 24
preparation procedures 24

processor socket 69
processors 69

Q

QuickSpecs 59, 71, 73

R

release button 65
removal and replacement procedures 23
removing the server blade 25
replacement procedures 23
required tools 23
ROM legacy USB support 62
ROM-Based Setup Utility (RBSU) 60

S

safety considerations 23
safety information 23, 24
SAS controller 35
SAS drives 15, 68
serial connector 72
serial label pull tab 65, 67
server blade components 65
server blade release lever 53, 65
server blade specifications 76
server specifications 76
Smart Storage Battery 38, 73
specifications 76
specifications, environmental 76
specifications, server blade 76
static electricity 23
SUV cable 72
SUV connector 65, 72, 74, 75
symbols on equipment 24
system board battery 41, 69
system board components 69
system components 65
system maintenance switch 69

T

TPM (Trusted Platform Module) 57
troubleshooting 58
troubleshooting resources 58, 59
Trusted Platform Module (TPM) 57

U

USB connector 72
USB support 62
utilities 59, 60

V

video connector 72
video connector cabling 74

W

warnings 23
warranty 5