Hewlett Packard Enterprise

HPE ProLiant DL380e Gen8 Server

Maintenance and Service Guide

Abstract

This guide describes identification and maintenance procedures, diagnostic tools, specifications and requirements for hardware components and software. This guide is for an experienced service technician. Hewlett Packard Enterprise assumes that you are qualified in the servicing of computer equipment, trained in recognizing hazards in products, and are familiar with weight and stability precautions.

Part Number: 676140-007
October 2019
Edition: 8

© Copyright 2012, 2015, 2019 Hewlett Packard Enterprise Development LP

The information contained herein is subject to change without notice. The only warranties for Hewlett Packard Enterprise products and services are set forth in the express warranty statements accompanying such products and services. Nothing herein should be construed as constituting an additional warranty. Hewlett Packard Enterprise shall not be liable for technical or editorial errors or omissions contained herein.

Links to third-party websites take you outside the Hewlett Packard Enterprise website. Hewlett Packard Enterprise has no control over and is not responsible for information outside the Hewlett Packard Enterprise website.

Microsoft® and Windows® are either registered trademarks or trademarks of Microsoft Corporation in the United States and/or other countries. Intel® and Xeon® are trademarks of Intel Corporation in the U.S. and other countries.

Contents

Customer self repair 6
Parts only warranty service 6
Illustrated parts catalog 16
Mechanical components 16
System components 19
Removal and replacement procedures 27
Required tools 27
Safety considerations 27
Preventing electrostatic discharge 27
Symbols on equipment 27
Server warnings and cautions 28
Rack warnings 28
Preparation procedures 29
Remove the security bezel (optional) 30
Power down the server 30
Extend the server from the rack 30
Access the product rear panel 32
Remove the server from the rack 33
Hot-plug drive blanks 33
Hot-plug drive 34
Power supply blank 35
Power supply 35
Access panel 36
Optical drive blank 37
Optical drive 37
Optical drive bracket 38
Optical drive cage 39
Air baffle 41
Front drive cage assembly 42
Hot-plug fan blank and module 43
Fan population guidelines 43
Removing a hot-plug fan blank or module if the server is installed in a ball-bearing rail system with the cable management arm 44
Removing a hot-plug fan blank or module if the server is installed in a friction rail system 45
Fan cage 46
Fan board 47
DIMMs 48
Heatsink blank 49
Heatsink 50
Processor 52
PCI riser cage 56
GPU retaining bracket 57
Expansion board 58
PCIe riser board 60
PSU air baffle 61
Rear drive cage 62
Flash-backed write cache procedures 63
FBWC module 64
Capacitor pack 65
Capacitor pack holder 66
Recovering data from the flash-backed write cache 67
System battery 68
System board assembly procedures 69

Install the spare system board....69
Re-entering the server serial number and product ID....75
Reactivate the HPE Smart Array SAS license key....76
Secondary PCI riser cage blank....77
LFF rear drive cage blank....78
HP Trusted Platform Module....79
Troubleshooting....80
Troubleshooting resources....80
Diagnostic tools....81
Hewlett Packard Enterprise product QuickSpecs....81
HPE Insight Diagnostics....81
HPE Insight Diagnostics survey functionality....81
HPE Insight Remote Support....81
HPE ROM-Based Setup Utility....82
Integrated Management Log....82
USB support and functionality....82
USB support....82
Internal USB functionality....83
External USB functionality....83
Automatic Server Recovery....83
Component identification....84
Front panel components....84
Front panel LEDs and buttons....87
Rear panel components....88
Rear panel LEDs and buttons....90
PCIe riser board slot definitions....90
System board components....91
DIMM slot locations....92
System maintenance switch....92
NMI functionality....93
Drive numbering....93
Drive LED definitions....95
FBWC module LED definitions....96
Fan locations....98
Cabling....99
Cabling overview....99
Front panel cabling....99
Storage cabling....99
4 LFF SATA cabling....100
4 SFF SATA cabling_Sausalito/Victora_rev1....100
6 LFF SATA cabling....101
6 SFF SATA cabling....101
8 LFF cabling....102
8 SFF cabling....104
8+8 SFF cabling....106
12 LFF cabling....109
25 SFF cabling....110
2 LFF rear drive cabling....112
2 SFF rear drive cabling....113
Capacitor pack cabling....114
Optical drive cabling....115
GPU power cabling....115
Specifications....118
Environmental specifications....118
Mechanical specifications....118
Power supply specifications....118
HPE 460 W CS Gold Hot-plug Power Supply (92% efficiency)....119

HPE 460 W CS Platinum Hot-plug Power Supply (94% efficiency) 119
HPE 460 W CS Platinum Plus Hot-plug Power Supply (94% efficiency) 120
HPE 750 W CS Gold Hot-plug Power Supply (92% efficiency)....120
HPE 750 W CS Platinum Hot-plug Power Supply (94% efficiency) 120
HPE 750 W CS Platinum Plus Hot-plug Power Supply (94% efficiency) 121
HPE 750 W CS Titanium Hot-plug Power Supply (96% efficiency)....121
HPE 750 W CS -48 V DC Hot-plug Power Supply (94% efficiency)....122
HPE 1200 W CS Platinum Plus Hot-plug Power Supply (94% efficiency) 123
Hot-plug power supply calculations....123
Acronyms and abbreviations.... 124
Documentation feedback 127
Index.... 128

Customer self repair

Hewlett Packard Enterprise products are designed with many Customer Self Repair (CSR) parts to minimize repair time and allow for greater flexibility in performing defective parts replacement. If during the diagnosis period Hewlett Packard Enterprise (or Hewlett Packard Enterprise service providers or service partners) identifies that the repair can be accomplished by the use of a CSR part, Hewlett Packard Enterprise will ship that part directly to you for replacement. There are two categories of CSR parts:

- **Mandatory**—Parts for which customer self repair is mandatory. If you request Hewlett Packard Enterprise to replace these parts, you will be charged for the travel and labor costs of this service.
- **Optional**—Parts for which customer self repair is optional. These parts are also designed for customer self repair. If, however, you require that Hewlett Packard Enterprise replace them for you, there may or may not be additional charges, depending on the type of warranty service designated for your product.

NOTE: Some Hewlett Packard Enterprise parts are not designed for customer self repair. In order to satisfy the customer warranty, Hewlett Packard Enterprise requires that an authorized service provider replace the part. These parts are identified as "No" in the Illustrated Parts Catalog.

Based on availability and where geography permits, CSR parts will be shipped for next business day delivery. Same day or four-hour delivery may be offered at an additional charge where geography permits. If assistance is required, you can call the Hewlett Packard Enterprise Support Center and a technician will help you over the telephone. Hewlett Packard Enterprise specifies in the materials shipped with a replacement CSR part whether a defective part must be returned to Hewlett Packard Enterprise. In cases where it is required to return the defective part to Hewlett Packard Enterprise, you must ship the defective part back to Hewlett Packard Enterprise within a defined period of time, normally five (5) business days. The defective part must be returned with the associated documentation in the provided shipping material. Failure to return the defective part may result in Hewlett Packard Enterprise billing you for the replacement. With a customer self repair, Hewlett Packard Enterprise will pay all shipping and part return costs and determine the courier/carrier to be used.

For more information about the Hewlett Packard Enterprise CSR program, contact your local service provider. For the North American program, go to the Hewlett Packard Enterprise CSR website (http://www.hpe.com/support/selfrepair).

Parts only warranty service

Your Hewlett Packard Enterprise Limited Warranty may include a parts only warranty service. Under the terms of parts only warranty service, Hewlett Packard Enterprise will provide replacement parts free of charge.

For parts only warranty service, CSR part replacement is mandatory. If you request Hewlett Packard Enterprise to replace these parts, you will be charged for the travel and labor costs of this service.

Réparation par le client (CSR)

Les produits Hewlett Packard Enterprise comportent de nombreuses pièces CSR (Customer Self Repair = réparation par le client) afin de minimiser les délais de réparation et faciliter le remplacement des pièces défectueuses. Si pendant la période de diagnostic, Hewlett Packard Enterprise (ou ses partenaires ou mainteneurs agréés) détermine que la réparation peut être effectuée à l'aide d'une pièce CSR, Hewlett Packard Enterprise vous l'envoie directement. Il existe deux catégories de pièces CSR :

- **Obligatoire—**Pièces pour lesquelles la réparation par le client est obligatoire. Si vous demandez à Hewlett Packard Enterprise de remplacer ces pièces, les coûts de déplacement et main d'œuvre du service vous seront facturés.
- **Facultatif—**Pièces pour lesquelles la réparation par le client est facultative. Ces pièces sont également conçues pour permettre au client d'effectuer lui-même la réparation. Toutefois, si vous demandez à Hewlett Packard Enterprise de remplacer ces pièces, l'intervention peut ou non vous être facturée, selon le type de garantie applicable à votre produit.

REMARQUE: Certaines pièces Hewlett Packard Enterprise ne sont pas conçues pour permettre au client d'effectuer lui-même la réparation. Pour que la garantie puisse s'appliquer, Hewlett Packard Enterprise exige que le remplacement de la pièce soit effectué par un Mainteneur Agréé. Ces pièces sont identifiées par la mention "Non" dans le Catalogue illustré.

Les pièces CSR sont livrées le jour ouvré suivant, dans la limite des stocks disponibles et selon votre situation géographique. Si votre situation géographique le permet et que vous demandez une livraison le jour même ou dans les 4 heures, celle-ci vous sera facturée. Pour toute assistance, appelez le Centre d’assistance Hewlett Packard Enterprise pour qu’un technicien vous aide au téléphone Dans les documents envoyés avec la pièce de rechange CSR, Hewlett Packard Enterprise précise s'il est nécessaire de lui retourner la pièce défectueuse. Si c'est le cas, vous devez le faire dans le délai indiqué, généralement cinq (5) jours ouvrés. La pièce et sa documentation doivent être retournées dans l'emballage fourni. Si vous ne retournez pas la pièce défectueuse, Hewlett Packard Enterprise se réserve le droit de vous facturer les coûts de remplacement. Dans le cas d'une pièce CSR, Hewlett Packard Enterprise supporte l'ensemble des frais d'expédition et de retour, et détermine la société de courses ou le transporteur à utiliser.

Pour plus d'informations sur le programme CSR de Hewlett Packard Enterprise, contactez votre Mainteneur Agrée local. Pour plus d'informations sur ce programme en Amérique du Nord, consultez le site Web Hewlett Packard Enterprise (http://www.hpe.com/support/selfrepair).

Service de garantie "pièces seules"

Votre garantie limitée Hewlett Packard Enterprise peut inclure un service de garantie "pièces seules". Dans ce cas, les pièces de rechange fournies par Hewlett Packard Enterprise ne sont pas facturées.

Dans le cadre de ce service, la réparation des pièces CSR par le client est obligatoire. Si vous demandez à Hewlett Packard Enterprise de remplacer ces pièces, les coûts de déplacement et main d'œuvre du service vous seront facturés.

Riparazione da parte del cliente

Per abbreviare i tempi di riparazione e garantire una maggiore flessibilità nella sostituzione di parti difettose, i prodotti Hewlett Packard Enterprise sono realizzati con numerosi componenti che possono essere riparati direttamente dal cliente (CSR, Customer Self Repair). Se in fase di diagnostica Hewlett Packard Enterprise (o un centro di servizi o di assistenza Hewlett Packard Enterprise) identifica il guasto come riparabile mediante un ricambio CSR, Hewlett Packard Enterprise lo spedirà direttamente al cliente per la sostituzione. Vi sono due categorie di parti CSR:

- **Obbligatorie—**Parti che devono essere necessariamente riparate dal cliente. Se il cliente ne affida la riparazione ad Hewlett Packard Enterprise, deve sostenere le spese di spedizione e di manodopera per il servizio.
- **Opzionali—**Parti la cui riparazione da parte del cliente è facoltativa. Si tratta comunque di componenti progettati per questo scopo. Se tuttavia il cliente ne richiede la sostituzione ad Hewlett Packard Enterprise, potrebbe dover sostenere spese addizionali a seconda del tipo di garanzia previsto per il prodotto.

NOTA: alcuni componenti Hewlett Packard Enterprise non sono progettati per la riparazione da parte del cliente. Per rispettare la garanzia, Hewlett Packard Enterprise richiede che queste parti siano sostituite da un centro di assistenza autorizzato. Tali parti sono identificate da un "No" nel Catalogo illustrato dei componenti.

In base alla disponibilità e alla località geografica, le parti CSR vengono spedite con consegna entro il giorno lavorativo seguente. La consegna nel giorno stesso o entro quattro ore è offerta con un supplemento di costo solo in alcune zone. In caso di necessità si può richiedere l'assistenza telefonica di un addetto del centro di supporto tecnico Hewlett Packard Enterprise. Nel materiale fornito con una parte di ricambio CSR, Hewlett Packard Enterprise specifica se il cliente deve restituire dei component. Qualora sia richiesta la resa ad Hewlett Packard Enterprise del componente difettoso, lo si deve spedire ad Hewlett Packard Enterprise entro un determinato periodo di tempo, generalmente cinque (5) giorni lavorativi. Il componente difettoso deve essere restituito con la documentazione associata nell'imballo di spedizione fornito. La mancata restituzione del componente può comportare la fatturazione del ricambio da parte di Hewlett Packard Enterprise. Nel caso di riparazione da parte del cliente, Hewlett Packard Enterprise sostiene tutte le spese di spedizione e resa e sceglie il corriere/vettore da utilizzare.

Per ulteriori informazioni sul programma CSR di Hewlett Packard Enterprise, contattare il centro di assistenza di zona. Per il programma in Nord America fare riferimento al sito Web (http://www.hpe.com/support/selfrepair).

Servizio di garanzia per i soli componenti

La garanzia limitata Hewlett Packard Enterprise può includere un servizio di garanzia per i soli componenti. Nei termini di garanzia del servizio per i soli componenti, Hewlett Packard Enterprise fornirà gratuitamente le parti di ricambio.

Per il servizio di garanzia per i soli componenti è obbligatoria la formula CSR che prevede la riparazione da parte del cliente. Se il cliente invece richiede la sostituzione ad Hewlett Packard Enterprise dovrà sostenere le spese di spedizione e di manodopera per il servizio.

Customer Self Repair

Hewlett Packard Enterprise Produkte enthalten viele CSR-Teile (Customer Self Repair), um Reparaturzeiten zu minimieren und höhere Flexibilität beim Austausch defekter Bauteile zu ermöglichen. Wenn Hewlett Packard Enterprise (oder ein Hewlett Packard Enterprise Servicepartner) bei der Diagnose feststellt, dass das Produkt mithilfe eines CSR-Teils repariert werden kann, sendet Ihnen Hewlett Packard Enterprise dieses Bauteil zum Austausch direkt zu. CSR-Teile werden in zwei Kategorien unterteilt:

- **Zwingend**—Teile, für die das Customer Self Repair-Verfahren zwingend vorgegeben ist. Wenn Sie den Austausch dieser Teile von Hewlett Packard Enterprise vornehmen lassen, werden Ihnen die Anfahrt- und Arbeitskosten für diesen Service berechnet.
- **Optional**—Teile, für die das Customer Self Repair-Verfahren optional ist. Diese Teile sind auch für Customer Self Repair ausgelegt. Wenn Sie jedoch den Austausch dieser Teile von Hewlett Packard Enterprise vornehmen lassen möchten, können bei diesem Service je nach den für Ihr Produkt vorgesehenen Garantiebedingungen zusätzliche Kosten anfallen.

HINWEIS: Einige Hewlett Packard Enterprise Teile sind nicht für Customer Self Repair ausgelegt. Um den Garantieanspruch des Kunden zu erfüllen, muss das Teil von einem Hewlett Packard Enterprise Servicepartner ersetzt werden. Im illustrierten Teilekatalog sind diese Teile mit „No“ bzw. „Nein“ gekennzeichnet.

CSR-Teile werden abhängig von der Verfügbarkeit und vom Lieferziel am folgenden Geschäftstag geliefert. Für bestimmte Standorte ist eine Lieferung am selben Tag oder innerhalb von vier Stunden gegen einen Aufpreis verfügbar. Wenn Sie Hilfe benötigen, können Sie das Hewlett Packard Enterprise

Support Center anrufen und sich von einem Mitarbeiter per Telefon helfen lassen. Den Materialien von Hewlett Packard Enterprise, die mit einem CSR-Ersatzteil geliefert werden, können Sie entnehmen, ob das defekte Teil an Hewlett Packard Enterprise zurückgeschickt werden muss. Wenn es erforderlich ist, das defekte Teil an Hewlett Packard Enterprise zurückzuschicken, müssen Sie dies innerhalb eines vorgegebenen Zeitraums tun, in der Regel innerhalb von fünf (5) Geschäftstagen. Das defekte Teil muss mit der zugehörigen Dokumentation in der Verpackung zurückgeschickt werden, die im Lieferumfang enthalten ist. Wenn Sie das defekte Teil nicht zurückschicken, kann Hewlett Packard Enterprise Ihnen das Ersatzteil in Rechnung stellen. Im Falle von Customer Self Repair kommt Hewlett Packard Enterprise für alle Kosten für die Lieferung und Rücksendung auf und bestimmt den Kurier-/Frachtdienst.

Weitere Informationen über das Hewlett Packard Enterprise Customer Self Repair Programm erhalten Sie von Ihrem Servicepartner vor Ort. Informationen über das CSR-Programm in Nordamerika finden Sie auf der Hewlett Packard Enterprise Website unter (http://www.hpe.com/support/selfrepair).

Parts-only Warranty Service (Garantieservice ausschließlich für Teile)

Ihre Hewlett Packard Enterprise Garantie umfasst möglicherweise einen Parts-only Warranty Service (Garantieservice ausschließlich für Teile). Gemäß den Bestimmungen des Parts-only Warranty Service stellt Hewlett Packard Enterprise Ersatzteile kostenlos zur Verfügung.

Für den Parts-only Warranty Service ist das CSR-Verfahren zwingend vorgegeben. Wenn Sie den Austausch dieser Teile von Hewlett Packard Enterprise vornehmen lassen, werden Ihnen die Anfahrt- und Arbeitskosten für diesen Service berechnet.

Reparaciones del propio cliente

Los productos de Hewlett Packard Enterprise incluyen muchos componentes que el propio usuario puede reemplazar (Customer Self Repair, CSR) para minimizar el tiempo de reparación y ofrecer una mayor flexibilidad a la hora de realizar sustituciones de componentes defectuosos. Si, durante la fase de diagnóstico, Hewlett Packard Enterprise (o los proveedores o socios de servicio de Hewlett Packard Enterprise) identifica que una reparación puede llevarse a cabo mediante el uso de un componente CSR, Hewlett Packard Enterprise le enviará dicho componente directamente para que realice su sustitución. Los componentes CSR se clasifican en dos categorías:

- **Obligatorio**—Componentes cuya reparación por parte del usuario es obligatoria. Si solicita a Hewlett Packard Enterprise que realice la sustitución de estos componentes, tendrá que hacerse cargo de los gastos de desplazamiento y de mano de obra de dicho servicio.
- **Opcional**—Componentes cuya reparación por parte del usuario es opcional. Estos componentes también están diseñados para que puedan ser reparados por el usuario. Sin embargo, si precisa que Hewlett Packard Enterprise realice su sustitución, puede o no conllevar costes adicionales, dependiendo del tipo de servicio de garantía correspondiente al producto.

NOTA: Algunos componentes de Hewlett Packard Enterprise no están diseñados para que puedan ser reparados por el usuario. Para que el usuario haga valer su garantía, Hewlett Packard Enterprise pone como condición que un proveedor de servicios autorizado realice la sustitución de estos componentes. Dichos componentes se identifican con la palabra "No" en el catálogo ilustrado de componentes.

Según la disponibilidad y la situación geográfica, los componentes CSR se enviarán para que lleguen a su destino al siguiente día laborable. Si la situación geográfica lo permite, se puede solicitar la entrega en el mismo día o en cuatro horas con un coste adicional. Si precisa asistencia técnica, puede llamar al Centro de asistencia técnica de Hewlett Packard Enterprise y recibirá ayuda telefónica por parte de un técnico. Con el envío de materiales para la sustitución de componentes CSR, Hewlett Packard Enterprise especificará si los componentes defectuosos deberán devolverse a Hewlett Packard Enterprise. En aquellos casos en los que sea necesario devolver algún componente a Hewlett Packard Enterprise,

deberá hacerlo en el periodo de tiempo especificado, normalmente cinco días laborables. Los componentes defectuosos deberán devolverse con toda la documentación relacionada y con el embalaje de envío. Si no enviara el componente defectuoso requerido, Hewlett Packard Enterprise podrá cobrarle por el de sustitución. En el caso de todas sustituciones que lleve a cabo el cliente, Hewlett Packard Enterprise se hará cargo de todos los gastos de envío y devolución de componentes y escogerá la empresa de transporte que se utilice para dicho servicio.

Para obtener más información acerca del programa de Reparaciones del propio cliente de Hewlett Packard Enterprise, póngase en contacto con su proveedor de servicios local. Si está interesado en el programa para Norteamérica, visite la página web de Hewlett Packard Enterprise CSR (http://www.hpe.com/support/selfrepair).

Servicio de garantía exclusivo de componentes

La garantía limitada de Hewlett Packard Enterprise puede que incluya un servicio de garantía exclusivo de componentes. Según las condiciones de este servicio exclusivo de componentes, Hewlett Packard Enterprise le facilitará los componentes de repuesto sin cargo adicional alguno.

Para este servicio de garantía exclusivo de componentes, es obligatoria la sustitución de componentes por parte del usuario (CSR). Si solicita a Hewlett Packard Enterprise que realice la sustitución de estos componentes, tendrá que hacerse cargo de los gastos de desplazamiento y de mano de obra de dicho servicio.

Customer Self Repair

Veel onderdelen in Hewlett Packard Enterprise producten zijn door de klant zelf te repareren, waardoor de reparatieduur tot een minimum beperkt kan blijven en de flexibiliteit in het vervangen van defecte onderdelen groter is. Deze onderdelen worden CSR-onderdelen (Customer Self Repair) genoemd. Als Hewlett Packard Enterprise (of een Hewlett Packard Enterprise Service Partner) bij de diagnose vaststelt dat de reparatie kan worden uitgevoerd met een CSR-onderdeel, verzendt Hewlett Packard Enterprise dat onderdeel rechtstreeks naar u, zodat u het defecte onderdeel daarmee kunt vervangen. Er zijn twee categorieën CSR-onderdelen:

- **Verplicht**—Onderdelen waarvoor reparatie door de klant verplicht is. Als u Hewlett Packard Enterprise verzoekt deze onderdelen voor u te vervangen, worden u voor deze service reiskosten en arbeidsloon in rekening gebracht.
- **Optioneel**—Onderdelen waarvoor reparatie door de klant optioneel is. Ook deze onderdelen zijn ontworpen voor reparatie door de klant. Als u echter Hewlett Packard Enterprise verzoekt deze onderdelen voor u te vervangen, kunnen daarvoor extra kosten in rekening worden gebracht, afhankelijk van het type garantieservice voor het product.

OPMERKING: Sommige Hewlett Packard Enterprise onderdelen zijn niet ontwikkeld voor reparatie door de klant. In verband met de garantievoorwaarden moet het onderdeel door een geautoriseerde Service Partner worden vervangen. Deze onderdelen worden in de geïllustreerde onderdelencatalogus aangemerkt met "Nee".

Afhankelijk van de leverbaarheid en de locatie worden CSR-onderdelen verzonden voor levering op de eerstvolgende werkdag. Levering op dezelfde dag of binnen vier uur kan tegen meerkosten worden aangeboden, indien dit mogelijk is gezien de locatie. Indien assistentie is gewenst, belt u het Hewlett Packard Enterprise Support Center om via de telefoon ondersteuning van een technicus te ontvangen. Hewlett Packard Enterprise vermeldt in de documentatie bij het vervangende CSR-onderdeel of het defecte onderdeel aan Hewlett Packard Enterprise moet worden geretourneerd. Als het defecte onderdeel aan Hewlett Packard Enterprise moet worden teruggezonden, moet u het defecte onderdeel binnen een bepaalde periode, gewoonlijk vijf (5) werkdagen, retourneren aan Hewlett Packard Enterprise. Het defecte onderdeel moet met de bijbehorende documentatie worden geretourneerd in het meegeleverde verpakkingsmateriaal. Als u het defecte onderdeel niet terugzendt, kan Hewlett Packard

Enterprise u voor het vervangende onderdeel kosten in rekening brengen. Bij reparatie door de klant betaalt Hewlett Packard Enterprise alle verzendkosten voor het vervangende en geretourneerde onderdeel en kiest Hewlett Packard Enterprise zelf welke koerier/transportonderneming hiervoor wordt gebruikt.

Neem contact op met een Service Partner voor meer informatie over het Customer Self Repair programma van Hewlett Packard Enterprise. Informatie over Service Partners vindt u op de Hewlett Packard Enterprise website (http://www.hpe.com/support/selfrepair).

Garantieservice "Parts Only"

Het is mogelijk dat de Hewlett Packard Enterprise garantie alleen de garantieservice "Parts Only" omvat. Volgens de bepalingen van de Parts Only garantieservice zal Hewlett Packard Enterprise kosteloos vervangende onderdelen ter beschikking stellen.

Voor de Parts Only garantieservice is vervanging door CSR-onderdelen verplicht. Als u Hewlett Packard Enterprise verzoekt deze onderdelen voor u te vervangen, worden u voor deze service reiskosten en arbeidsloon in rekening gebracht

Reparo feito pelo cliente

Os produtos da Hewlett Packard Enterprise são projetados com muitas peças para reparo feito pelo cliente (CSR) de modo a minimizar o tempo de reparo e permitir maior flexibilidade na substituição de peças com defeito. Se, durante o período de diagnóstico, a Hewlett Packard Enterprise (ou fornecedores/parceiros da Hewlett Packard Enterprise) concluir que o reparo pode ser efetuado pelo uso de uma peça CSR, a Hewlett Packard Enterprise enviará a peça diretamente ao cliente. Há duas categorias de peças CSR:

- **Obrigatória**—Peças cujo reparo feito pelo cliente é obrigatório. Se desejar que a Hewlett Packard Enterprise substitua essas peças, serão cobradas as despesas de transporte e mão-de-obra do serviço.
- **Opcional**—Peças cujo reparo feito pelo cliente é opcional. Essas peças também são projetadas para o reparo feito pelo cliente. No entanto, se desejar que a Hewlett Packard Enterprise as substitua, pode haver ou não a cobrança de taxa adicional, dependendo do tipo de serviço de garantia destinado ao produto.

OBSERVAÇÃO: Algumas peças da Hewlett Packard Enterprise não são projetadas para o reparo feito pelo cliente. A fim de cumprir a garantia do cliente, a Hewlett Packard Enterprise exige que um técnico autorizado substitua a peça. Essas peças estão identificadas com a marca "No" (Não), no catálogo de peças ilustrado.

Conforme a disponibilidade e o local geográfico, as peças CSR serão enviadas no primeiro dia útil após o pedido. Onde as condições geográficas permitirem, a entrega no mesmo dia ou em quatro horas pode ser feita mediante uma taxa adicional. Se precisar de auxílio, entre em contato com o Centro de suporte técnico da Hewlett Packard Enterprise para que um técnico o ajude por telefone. A Hewlett Packard Enterprise especifica nos materiais fornecidos com a peça CSR de reposição se a peça com defeito deve ser devolvida à Hewlett Packard Enterprise. Nos casos em que isso for necessário, é preciso enviar a peça com defeito à Hewlett Packard Enterprise, você deverá enviar a peça com defeito de volta para a Hewlett Packard Enterprise dentro do período de tempo definido, normalmente em 5 (cinco) dias úteis. A peça com defeito deve ser enviada com a documentação correspondente no material de transporte fornecido. Caso não o faça, a Hewlett Packard Enterprise poderá cobrar a reposição. Para as peças de reparo feito pelo cliente, a Hewlett Packard Enterprise paga todas as despesas de transporte e de devolução da peça e determina a transportadora/serviço postal a ser utilizado.

Para obter mais informações sobre o programa de reparo feito pelo cliente da Hewlett Packard Enterprise, entre em contato com o fornecedor de serviços local. Para o programa norte-americano, visite o site da Hewlett Packard Enterprise (http://www.hpe.com/support/selfrepair).

Serviço de garantia apenas para peças

A garantia limitada da Hewlett Packard Enterprise pode incluir um serviço de garantia apenas para peças. Segundo os termos do serviço de garantia apenas para peças, a Hewlett Packard Enterprise fornece as peças de reposição sem cobrar nenhuma taxa.

No caso desse serviço, a substituição de peças CSR é obrigatória. Se desejar que a Hewlett Packard Enterprise substitua essas peças, serão cobradas as despesas de transporte e mão-de-obra do serviço.

カスタマーセルフリペア

修理時間を短縮し、故障部品の交換における高い柔軟性を確保するために、Hewlett Packard Enterprise製品には多数のカスタマーセルフリペア（CSR）部品があります。診断の際に、CSR部品を使用すれば修理ができるとHewlett Packard Enterprise（Hewlett Packard EnterpriseまたはHewlett Packard Enterprise正規保守代理店）が判断した場合、Hewlett Packard Enterpriseはその部品を直接、お客様に発送し、お客様に交換していただきます。CSR部品には以下の2種類があります。

- **必須** - カスタマーセルフリペアが必須の部品。当該部品について、もしもお客様がHewlett Packard Enterpriseに交換作業を依頼される場合には、その修理サービスに関する交通費および人件費がお客様に請求されます。
- **任意** - カスタマーセルフリペアが任意である部品。この部品もカスタマーセルフリペア用です。当該部品について、もしもお客様がHewlett Packard Enterpriseに交換作業を依頼される場合には、お買い上げの製品に適用される保証サービス内容の範囲内においては、別途費用を負担していただくことなく保証サービスを受けることができます。

注：Hewlett Packard Enterprise製品の一部の部品は、カスタマーセルフリペアの対象外です。製品の保証を継続するためには、Hewlett Packard EnterpriseまたはHewlett Packard Enterprise正規保守代理店による交換作業が必須となります。部品カタログには、当該部品がカスタマーセルフリペア除外品である旨が記載されています。

部品供給が可能な場合、地域によっては、CSR部品を翌営業日に届くように発送します。また、地域によっては、追加費用を負担いただくことにより同日または4時間以内に届くように発送することも可能な場合があります。サポートが必要なときは、Hewlett Packard Enterpriseサポートセンターに電話していただければ、技術者が電話でアドバイスします。交換用のCSR部品または同梱物には、故障部品をHewlett Packard Enterpriseに返送する必要があるかどうかが表示されています。故障部品をHewlett Packard Enterpriseに返送する必要がある場合は、指定期限内（通常は5営業日以内）に故障部品をHewlett Packard Enterpriseに返送してください。故障部品を返送する場合は、届いた時の梱包箱に関連書類とともに入れてください。故障部品を返送しない場合、Hewlett Packard Enterpriseから部品費用が請求されます。カスタマーセルフリペアの際には、Hewlett Packard Enterpriseは送料および部品返送費を全額負担し、使用する宅配便会社や運送会社を指定します。

部品のみ保証サービス

Hewlett Packard Enterprise保証サービスには、部品のみ保証サービスが適用される場合があります。このサービスでは、交換部品は無償で提供されます。

部品のみ保証サービスにおいては、CSR部品をお客様により交換作業していただくことが必須になります。当該部品について、もしもお客様がHewlett Packard Enterpriseに交換作業を依頼される場合には、その修理サービスに関する交通費および人件費がお客様のご負担となります。

客户自行维修

Hewlett Packard Enterprise 产品提供许多客户自行维修 (CSR) 部件，以尽可能缩短维修时间和在更换缺陷部件方面提供更大的灵活性。如果在诊断期间 Hewlett Packard Enterprise（或Hewlett Packard Enterprise 服务提供商或服务合作伙伴）确定可以通过使用 CSR 部件完成维修，Hewlett Packard Enterprise 将直接把该部件发送给您进行更换。有两类 CSR 部件：

- **强制性的** — 要求客户必须自行维修的部件。如果您请求 Hewlett Packard Enterprise 更换这些部件，则必须为该服务支付差旅费和人工费用。
- **可选的** — 客户可以选择是否自行维修的部件。这些部件也是为客户自行维修设计的。不过，如果您要求 Hewlett Packard Enterprise 为您更换这些部件，则根据为您的产品指定的保修服务类型，Hewlett Packard Enterprise 可能收取或不再收取任何附加费用。

注：某些 Hewlett Packard Enterprise 部件的设计并未考虑客户自行维修。为了满足客户保修的需要，Hewlett Packard Enterprise 要求授权服务提供商更换相关部件。这些部件在部件图解目录中标记为“否”。

CSR 部件将在下一个工作日发运（取决于备货情况和允许的地理范围）。在允许的地理范围内，可在当天或四小时内发运，但要收取额外费用。如果需要帮助，您可以致电 Hewlett Packard Enterprise 技术支持中心，将会有技术人员通过电话为您提供帮助。Hewlett Packard Enterprise 会在随更换的 CSR 部件发运的材料中指明是否必须将有缺陷的部件返还给 Hewlett Packard Enterprise。如果要求您将有缺陷的部件返还给 Hewlett Packard Enterprise，那么您必须在规定的期限内（通常是五 (5) 个工作日）将缺陷部件发给 Hewlett Packard Enterprise。有缺陷的部件必须随所提供的发运材料中的相关文件一起返还。如果未能送还有缺陷的部件，Hewlett Packard Enterprise 可能会要求您支付更换费用。客户自行维修时，Hewlett Packard Enterprise 将承担所有相关运输和部件返回费用，并指定快递商/承运商。

有关 Hewlett Packard Enterprise 客户自行维修计划的详细信息，请与您当地的服务提供商联系。有关北美地区的计划，请访问 Hewlett Packard Enterprise 网站 (http://www.hpe.com/support/selfrepair)。

仅部件保修服务

您的 Hewlett Packard Enterprise 有限保修服务可能涉及仅部件保修服务。根据仅部件保修服务条款的规定，Hewlett Packard Enterprise 将免费提供更换的部件。

仅部件保修服务要求进行 CSR 部件更换。如果您请求 Hewlett Packard Enterprise 更换这些部件，则必须为该服务支付差旅费和人工费用。

客戶自行維修

Hewlett Packard Enterprise 產品設計了許多「客戶自行維修」(CSR) 的零件以減少維修時間，並且使得更換瑕疵零件時能有更大的彈性。如果在診斷期間，Hewlett Packard Enterprise (或 Hewlett Packard Enterprise 服務供應商或維修夥伴) 辨認出此項維修工作可以藉由使用 CSR 零件來完成，則 Hewlett Packard Enterprise 將直接寄送該零件給您作更換。CSR 零件分為兩種類別：

- **強制的** — 客戶自行維修所使用的零件是強制性的。如果您要求 Hewlett Packard Enterprise 更換這些零件，Hewlett Packard Enterprise 將會向您收取此服務所需的外出費用與勞動成本。
- **選購的** — 客戶自行維修所使用的零件是選購的。這些零件也設計用於客戶自行維修之用。不過，如果您要求 Hewlett Packard Enterprise 為您更換，則可能需要也可能不需要負擔額外的費用，端視針對此產品指定的保固服務類型而定。

備註：某些 Hewlett Packard Enterprise 零件沒有消費者可自行維修的設計。為符合客戶保固，Hewlett Packard Enterprise 需要授權的服務供應商更換零件。這些零件在圖示的零件目錄中，被標示為「否」。

基於材料取得及環境允許的情況下，CSR 零件將於下一個工作日以快遞寄送。在環境的允許下當天或四小時內送達，則可能需要額外的費用。若您需要協助，可致電 Hewlett Packard Enterprise 支援中心，會有一位技術人員透過電話來協助您。不論損壞的零件是否必須退回，Hewlett Packard Enterprise 皆會在與 CSR 替換零件一起運送的材料中註明。若要將損壞的零件退回 Hewlett Packard Enterprise，您必須在指定的一段時間內 (通常為五 (5) 個工作天)，將損壞的零件寄回 Hewlett Packard Enterprise。損壞的零件必須與寄送資料中隨附的相關技術文件一併退還。如果無法退還損壞的零件，Hewlett Packard Enterprise 可能要向您收取替換費用。針對客戶自行維修情形，Hewlett Packard Enterprise 將負責所有運費及零件退還費用，並指定使用何家快遞/貨運公司。

如需 Hewlett Packard Enterprise 的 CSR 方案詳細資訊，請連絡您當地的服務供應商。至於北美方案，請參閱 Hewlett Packard Enterprise 的 CSR 網站frepair (http://www.hpe.com/support/selfrepair)。

僅限零件的保固服務

您的「Hewlett Packard Enterprise 有限保固」可能包含僅限零件的保固服務。在僅限零件的保固服務情況下，Hewlett Packard Enterprise 將免費提供替換零件。

針對僅限零件的保固服務，CSR 零件替換是強制性的。如果您要求 Hewlett Packard Enterprise 更換這些零件，Hewlett Packard Enterprise 將會向您收取此服務所需的外出費用與勞動成本。

고객 셀프 수리

Hewlett Packard Enterprise 제품은 수리 시간을 최소화하고 결함이 있는 부품 교체 시 더욱 융통성을 발휘할 수 있도록 하기 위해 고객 셀프 수리(CSR) 부품을 다량 사용하여 설계되었습니다. 진단 기간 동안 Hewlett Packard Enterprise(또는 Hewlett Packard Enterprise 서비스 공급업체 또는 서비스 협력업체)에서 CSR 부품을 사용하여 수리가 가능하다고 판단되면 Hewlett Packard Enterprise는 해당 부품을 바로 사용자에게 보내어 사용자가 교체할 수 있도록 합니다. CSR 부품에는 두 가지 종류가 있습니다.

- **필수 -** 고객 셀프 수리가 의무 사항인 필수 부품. 사용자가 Hewlett Packard Enterprise에 이 부품의 교체를 요청할 경우 이 서비스에 대한 출장비 및 작업비가 청구됩니다.
- **선택 사항 -** 고객 셀프 수리가 선택 사항인 부품. 이 부품들도 고객 셀프 수리가 가능하도록 설계되었습니다. 하지만 사용자가 Hewlett Packard Enterprise에 이 부품의 교체를 요청할 경우 사용자가 구입한 제품에 해당하는 보증 서비스 유형에 따라 추가 비용 없이 교체가 가능할 수 있습니다.

참고: 일부 Hewlett Packard Enterprise 부품은 고객 셀프 수리가 불가능하도록 설계되었습니다. Hewlett Packard Enterprise는 만족스러운 고객 보증을 위해 공인 서비스 제공업체를 통해 부품을 교체하도록 하고 있습니다. 이러한 부품들은 Illustrated Parts Catalog에 "No"라고 표시되어 있습니다.

CSR 부품은 재고 상태와 지리적 조건이 허용하는 경우 다음 영업일 납품이 가능하도록 배송이 이루어집니다. 지리적 조건이 허용하는 경우 추가 비용이 청구되는 조건으로 당일 또는 4시간 배송이 가능할 수도 있습니다. 도움이 필요하시면 Hewlett Packard Enterprise Support Center로 전화하십시오. 전문 기술자가 전화로 도움을 줄 것입니다. Hewlett Packard Enterprise는 결함이 발생한 부품을 Hewlett Packard Enterprise로 반환해야 하는지 여부를 CSR 교체 부품과 함께 배송된 자료에 지정합니다. 결함이 발생한 부품을 Hewlett Packard Enterprise로 반환해야 하는 경우에는 지정된 기간 내(통상 영업일 기준 5일)에 Hewlett Packard Enterprise로 반환해야 합니다. 이때 결함이 발생한 부품은 제공된 포장 재료에 넣어 관련 설명서와 함께 반환해야 합니다. 결함이 발생한 부품을 반환하지 않는 경우 Hewlett Packard Enterprise가 교체 부품에 대해 비용을 청구할 수 있습니다. 고객 셀프 수리의 경우, Hewlett Packard Enterprise는 모든 운송 및 부품 반환 비용을 부담하며 이용할 운송업체 및 택배 서비스를 결정합니다.

Hewlett Packard Enterprise CSR 프로그램에 대한 자세한 내용은 가까운 서비스 제공업체에 문의하십시오. 북미 지역의 프로그램에 대해서는 Hewlett Packard Enterprise CSR 웹 사이트(http://www.hpe.com/support/selfrepair)를 참조하십시오.

부품 제공 보증 서비스

Hewlett Packard Enterprise 제한 보증에는 부품 제공 보증 서비스가 포함될 수 있습니다. 이러한 경우 Hewlett Packard Enterprise는 부품 제공 보증 서비스의 조건에 따라 교체 부품만을 무료로 제공합니다.

부품 제공 보증 서비스 제공 시 CSR 부품 교체는 의무 사항입니다. 사용자가 Hewlett Packard Enterprise에 이 부품의 교체를 요청할 경우 이 서비스에 대한 출장비 및 작업비가 청구됩니다.

Illustrated parts catalog

Mechanical components

Hewlett Packard Enterprise continually improves and changes product parts. For complete and current supported parts information, see the Hewlett Packard Enterprise PartSurfer website (http://www.hpe.com/info/partssurfer).

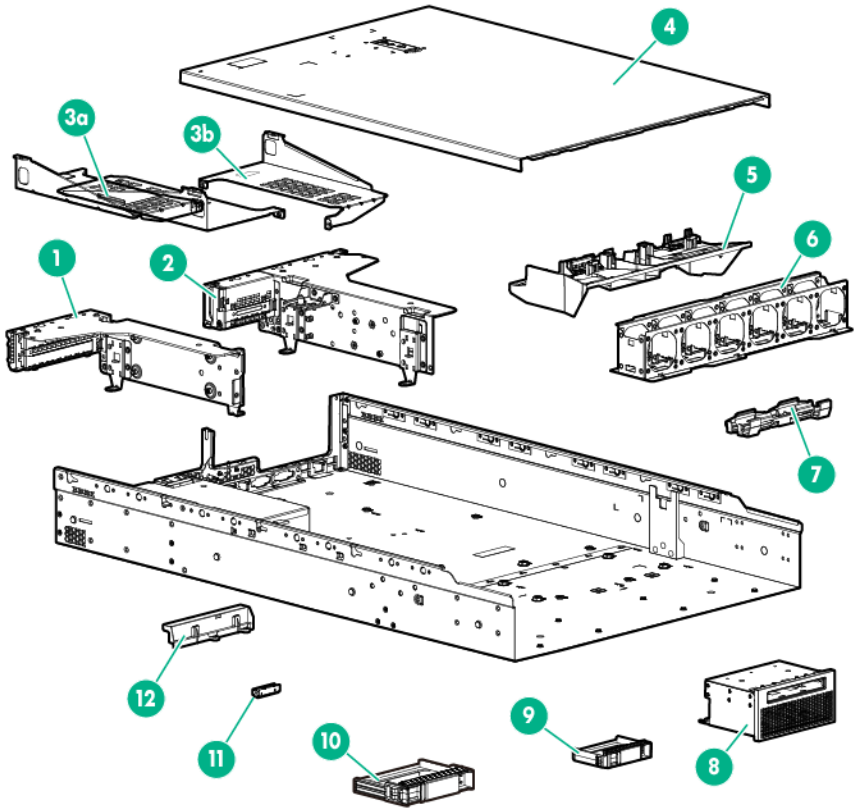

Item	Description	Spare part number	Customer self repair (on page 6)
1	Secondary PCI riser cage	688037-001	Optional[2]
2	Primary PCI riser cage	684895-001	Optional[2]
3	GPU retaining brackets	684901-001	Mandatory[1]
	a) Secondary GPU bracket	—	—
	b) Primary GPU bracket	—	—
4	Access panel	—	—
	a) Access panel for the 8 LFF, 8 SFF, and 8+8 SFF drive models	687951-001	Mandatory[1]
	b) Access panel for the 12 LFF and 25 SFF drive models*	687952-001	Mandatory[1]
5	Air baffle	684891-001	Mandatory[1]

Item	Description	Spare part number	Customer self repair (on page 6)
6	Fan cage	684890-001	Optional[2]
7	Capacitor pack holder	687957-001	Mandatory[1]
8	Optical drive cage	675601-001	Optional[2]
9	SFF drive blank	670033-001	Mandatory[1]
10	LFF drive blank	675039-001	Mandatory[1]
11	Optical drive bracket	507260-001	Mandatory[1]
12	PSU air baffle	684894-001	Mandatory[1]
13	Hardware blank kit	687953-001	Mandatory[1]
	a) Optical drive blank*	—	—
	b) Fan blank*	—	—
	c) Heatsink blank*	—	—
	d) Power supply blank*	—	—

* Not shown

[1]Mandatory—Parts for which customer self repair is mandatory. If you request Hewlett Packard Enterprise to replace these parts, you will be charged for the travel and labor costs of this service.
[2]Optional—Parts for which customer self repair is optional. These parts are also designed for customer self repair. If, however, you require that Hewlett Packard Enterprise replace them for you, there may or may not be additional charges, depending on the type of warranty service designated for your product.
[3]No—Some Hewlett Packard Enterprise parts are not designed for customer self repair. In order to satisfy the customer warranty, Hewlett Packard Enterprise requires that an authorized service provider replace the part. These parts are identified as "No" in the Illustrated Parts Catalog.

[1]Obligatoire—Pièces pour lesquelles le client doit procéder lui-même aux réparations. Si vous demandez à Hewlett Packard Enterprise de procéder au remplacement de ces pièces, les frais de transport et de main d’œuvre pour ce service vous seront facturés.
[2]Facultatif—Pièces pour lesquelles une réparation par le client est facultative. Ces pièces sont également conçues pour que le client puisse procéder lui-même aux réparations. Cependant, les frais supplémentaires engendrés par le remplacement de ces pièces par Hewlett Packard Enterprise dépendent du type de service de garantie désigné pour votre produit.
[3]Non—Certaines pièces Hewlett Packard Enterprise ne sont pas conçues pour être remplacées par le client. Afin de se conformer aux exigences de la garantie la garantie du client, Hewlett Packard Enterprise demande à un fournisseur de services agréé de procéder au remplacement de la pièce. Ces pièces sont signaléespar le mot « Non » dans le Catalogue de pièces illustré.

[1]Obbligatorio—Parti per le quali il cliente è tenuto a effettuare autonomamente la riparazione. Se si richiede l'intervento di Hewlett Packard Enterprise per la sostituzione di queste parti, al cliente verranno addebitate le spese di viaggio e manodopera dell'operazione.
[2]Facoltativo—Parti per le quali la riparazione in autonomia da parte del cliente è facoltativa. Queste parti sono progettate per consentire anche la riparazione da parte del cliente. Tuttavia, se il cliente richiedel'intervento di Hewlett Packard Enterprise per la sostituzione, potrebbero essere addebitate spese aggiuntive a seconda del tipo di garanzia in assistenza previsto per il prodotto.
[3]No—Alcune parti Hewlett Packard Enterprise non sono progettate la riparazione in autonomia da parte del cliente. In base a quanto previsto dalla garanzia per il cliente, Hewlett Packard Enterprise richiede l'intervento di un tecnico autorizzato per la sostituzione della parte. Queste parti sono contrassegnate con"No"nel catalogo parti illustrato.

[1]Zwingend—Teile, für die das Customer Self Repair-Verfahren zwingend vorgegeben ist. Wenn Sie den Austausch dieser Teile von Hewlett Packard Enterprisevornehmen lassen, werden Ihnen die Anfahrt- und Arbeitskosten für diesen Service berechnet.
[2]Optional—Teile, für die das Customer Self Repair-Verfahren optional ist. Diese Teile sind auch für Customer Self Repair ausgelegt. Wenn Sie jedoch den Austausch dieser Teile von Hewlett Packard Enterprisevornehmen lassen möchten, können bei diesem Service je nach den für Ihr Produkt vorgesehenen Garantiebedingungen zusätzliche Kosten anfallen.

[3]Nein—Einige Hewlett Packard Enterprise Teile sind nicht für Customer Self Repair ausgelegt. Um den Garantieanspruch des Kunden zu erfüllen, muss das Teil von einem Hewlett Packard Enterprise Servicepartner ersetzt werden. Im illustrierten Teilekatalog sind diese Teile mit „No“ bzw. „Nein“ gekennzeichnet.

[1]Obligatorio—Componentes cuya reparación por parte del usuario es obligatoria. Si solicita a Hewlett Packard Enterprise que realice la sustitución de estos componentes, tendrá que hacerse cargo de los gastos de desplazamiento y de mano de obra de dicho servicio.
[2]Opcional—Componentes cuya reparación por parte del usuario es opcional. Estos componentes también están diseñados para que puedan ser reparados por el usuario. Sin embargo, si precisa que Hewlett Packard Enterprise realice su sustitución, puede o no conllevar costes adicionales, dependiendo del tipo de servicio de garantía correspondiente al producto.
[3]No—Algunos componentes de Hewlett Packard Enterprise no están diseñados para que puedan ser reparados por el usuario. Para que el usuario haga valer su garantía, Hewlett Packard Enterprise pone como condición que un proveedor de servicios autorizado realice la sustitución de estos componentes. Dichos componentes se identifican con la palabra "No" en el catálogo ilustrado de componentes.

[1]Verplicht—Onderdelen die de klant zelf moet vervangen. Als u Hewlett Packard Enterprise vraagt deze onderdelen te vervangen, worden er reis- en arbeidskosten voor deze service in rekening gebracht.
[2]Optioneel—Onderdelen die de klant zelf kan vervangen. Deze onderdelen zijn ook ontworpen om door de klant zelf te worden vervangen. Als u Hewlett Packard Enterprise verzoekt om deze te vervangen, kan het zijn dat hiervoor extra kosten in rekening worden gebracht, afhankelijk van het soort garantie dat op uw product van toepassing is.
[3]Geen—Sommige onderdelen van Hewlett Packard Enterprise zijn niet ontworpen om door de klant zelf te worden vervangen. Om te voldoen aan de garantievoorwaarden eist Hewlett Packard Enterprise dat een geautoriseerde serviceverlener het onderdeel vervangt. Deze onderdelen worden aangeduid met 'Geen' in de geïllustreerde onderdelencatalogus.

[1]Obrigatório—Peças cujo reparo feito pelo cliente é obrigatório. Se desejar que a Hewlett Packard Enterprise substitua essas peças, serão cobradas as despesas de transporte e mão-de-obra do serviço.
[2]Opcional—Peças cujo reparo feito pelo cliente é opcional. Essas peças também são projetadas para o reparo feito pelo cliente. No entanto, se desejar que a Hewlett Packard Enterprise as substitua, pode haver ou não a cobrança de taxa adicional, dependendo do tipo de serviço de garantia destinado ao produto.
[3]Não—Algumas peças da Hewlett Packard Enterprise não são projetadas para o reparo feito pelo cliente. A fim de cumprir a garantia do cliente, a Hewlett Packard Enterprise exige que um técnico autorizado substitua a peça. Essas peças estão identificadas com a marca "No" (Não), no catálogo de peças ilustrado.

[1]Mandatory：必須 — カスタマーセルフリペアが必須の部品。当該部品について、もしもお客様がHewlett Packard Enterpriseに交換作業を依頼される場合には、その修理サービスに関する交通費および人件費がお客様に請求されます。
[2]Optional：任意 — カスタマーセルフリペアが任意である部品。この部品もカスタマーセルフリペア用です。当該部品について、もしもお客様がHewlett Packard Enterpriseに交換作業を依頼される場合には、お買い上げの製品に適用される保証サービス内容の範囲内においては、別途費用を負担していただくことなく保証サービスを受けることができます。
[3]No：除外 — Hewlett Packard Enterprise製品の一部の部品は、カスタマーセルフリペアの対象外です。製品の保証を継続するためには、Hewlett Packard EnterpriseまたはHewlett Packard Enterprise正規保守代理店による交換作業が必須となります。部品カタログには、当該部品がカスタマーセルフリペア除外品である旨が記載されています。

[1]Mandatory — 客户必须自行维修的部件。如果您请求 Hewlett Packard Enterprise 更换这些部件，则必须为该服务支付差旅费和人工费用。
[2]Optional — 客户可以选择是否自行维修的部件。这些部件也是为客户自行维修设计的。不过，如果您要求 Hewlett Packard Enterprise 为您更换这些部件，则根据为您的产品指定的保修服务类型，Hewlett Packard Enterprise 可能收取或不再收取任何附加费用。
[3]No — 某些 Hewlett Packard Enterprise 部件的设计并未考虑客户自行维修。为了满足客户保修的需要，Hewlett Packard Enterprise 要求授权服务提供商更换相关部件。这些部件在部件图解目录中标记为“否”。

[1]Mandatory — 客戶自行維修所使用的零件是強制性的。如果您要求 Hewlett Packard Enterprise 更換這些零件，Hewlett Packard Enterprise 將會向您收取此服務所需的外出費用與勞動成本。
[2]Optional — 客戶自行維修所使用的零件是選購的。這些零件也設計用於客戶自行維修之用。不過，如果您要求 Hewlett Packard Enterprise 為您更換，則可能需要也可能不需要負擔額外的費用，端視針對此產品指定的保固服務類型而定。
[3]No — 某些 Hewlett Packard Enterprise 零件沒有消費者可自行維修的設計。為符合客戶保固，Hewlett Packard Enterprise 需要授權的服務供應商更換零件。這些零件在圖示的零件目錄中，被標示為「否」。

[1]Mandatory — 고객 셀프 수리가 의무 사항인 필수 부품. 사용자가 Hewlett Packard Enterprise에 이 부품의 교체를 요청할 경우 해당 서비스에 대한 출장비 및 작업비가 청구됩니다.
[2]Optional — 고객 셀프 수리가 선택 사항인 부품. 이러한 부품들도 고객 셀프 수리가 가능하도록 설계되었습니다. 하지만 사용자가 Hewlett Packard Enterprise에 이러한 부품의 교체를 요청할 경우 사용자가 구입한 제품에 해당하는 보증 서비스 유형에 따라 추가 비용 없이 교체가 가능할 수 있습니다.
[3]No — 일부 Hewlett Packard Enterprise 부품은 고객 셀프 수리가 불가능하도록 설계되었습니다. Hewlett Packard Enterprise는 만족스러운 고객 보증을 위해 공인 서비스 제공업체를 통해 부품을 교체하도록 요구하고 있습니다. 이러한 부품들은 Illustrated Parts Catalog에 “No”라고 표시되어 있습니다.

System components

Hewlett Packard Enterprise continually improves and changes product parts. For complete and current supported parts information, see the Hewlett Packard Enterprise PartSurfer website (http://www.hpe.com/info/partssurfer).

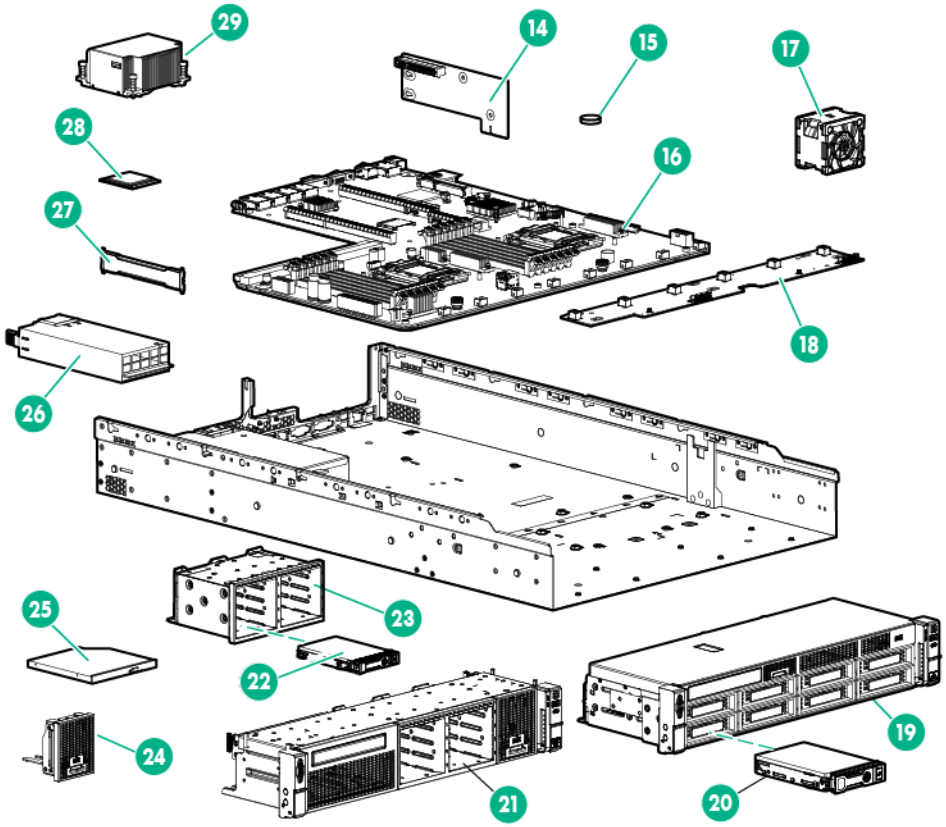

Item Ha	Description	Spare part number	Customer self repair (on page 6)
14	PCIe riser board options	—	—
	a) PCIe low-profile riser board	684898-001	Mandatory[1]
	b) PCIe riser board without SAS support*	684897-001	Mandatory[1]
	c) PCIe riser board with SAS support*, †	684896-001	Mandatory[1]
	d) PCIe riser board for the secondary PCI riser cage*	687962-001	Mandatory[1]
15	System battery	234556-001	Optional[2]
16	System board assemblies (include alcohol pad and thermal compound)	—	—
	System board assembly for Intel Xeon E5-2400 processors	684893-001	Optional[2]
	a) System board with subpan	—	—
	b) System board tray*	—	—
	c) PSU air baffle*	—	—

Item Ha	Description	Spare part number	Customer self repair (on page 6)
	d) Accessory kit*	—	—
	System board assembly for Intel Xeon E5-2400 and E5-2400 v2 processors	732145-001	Optional[2]
	a) System board with subpan*	—	—
	b) System board tray*	—	—
	c) PSU air baffle*	—	—
	d) Accessory kit*	—	—
17	Hot-plug fan module	662520-001	Mandatory[1]
18	Fan board	684889-001	Mandatory[1]
19	LFF drive cage assemblies	—	—
	a) 8-bay LFF drive cage assembly	684888-001	Optional[2]
	b) 12-bay LFF drive cage (with expander backplane)*	684886-001	Optional[2]
	c) 2-bay LFF rear drive cage assembly*	684899-001	Mandatory[1]
20	LFF drives (8.89 cm, 3.5 in)	—	—
	SAS drives	—	—
	a) 450-GB ENT hard drive	653951-001	Mandatory[1]
	b) 600-GB ENT hard drive*	653952-001	Mandatory[1]
	c) 1-TB MDL hard drive*	653947-001	Mandatory[1]
	d) 2-TB MDL hard drive*	653948-001	Mandatory[1]
	e) 3-TB MDL hard drive*	653959-001	Mandatory[1]
	SATA drives	—	—
	a) 80-GB EV solid state drive*	734563-001	Mandatory[1]
	b) 100-GB MLC EM solid state drive*	653968-001	Mandatory[1]
	c) 120-GB EV solid state drive*	718300-001	Mandatory[1]
	d) 200-GB MLC EM solid state drive*	653969-001	Mandatory[1]
	e) 240-GB EV solid state drive*	741239-001	Mandatory[1]
	f) 240-GB EV solid state drive*	718294-001	Mandatory[1]
	g) 400-GB MLC EM solid state drive*	653970-001	Mandatory[1]
	h) 480-GB EV solid state drive*	718296-001	Mandatory[1]
	i) 500-GB MDL hard drive*	658103-001	Mandatory[1]
	j) 600-GB EV solid state drive*	739960-001	Mandatory[1]
	k) 800-GB EV solid state drive*	718298-001	Mandatory[1]
	l) 1-TB MDL hard drive*	657739-001	Mandatory[1]
	m) 2-TB MDL hard drive*	658102-001	Mandatory[1]
	n) 2-TB MDL hard drive*	739711-001	Mandatory[1]

Item Ha	Description	Spare part number	Customer self repair (on page 6)
	o) 3-TB MDL hard drive*	628182-001	Mandatory[1]
	p) 3-TB MDL hard drive*	738041-001	Mandatory[1]
	q) 3-TB MDL hard drive*	739710-001	Mandatory[1]
	r) 4-TB MDL hard drive*	738352-001	Mandatory[1]
21	SFF drive cage assemblies	—	—
	a) 8-bay SFF drive cage assembly	684887-001	Mandatory[1]
	b) 25-bay SFF drive cage with backplane*	687961-001	Mandatory[1]
	c) 2-bay SFF rear drive cage*	684900-001	Mandatory[1]
22	SFF drives (6.35 cm, 2.5 in)	—	—
	SAS drives	—	—
	a) 72-GB ENT hard drive	653949-001	Mandatory[1]
	b) 146-GB ENT hard drive*	653950-001	Mandatory[1]
	c) 200-GB SLC solid state drive*	653961-001	Mandatory[1]
	d) 200-GB MLC EM solid state drive*	658580-001	Mandatory[1]
	e) 300-GB 10,000 rpm hard drive*	696739-001	Mandatory[1]
	f) 300-GB 10,000 rpm ENT hard drive*	653955-001	Mandatory[1]
	g) 300-GB 10, 000 rpm ENT hard drive*	728759-001	Mandatory[1]
	h) 300-GB 15,000 rpm ENT hard drive*	653960-001	Mandatory[1]
	i) 400-GB SLC solid state drive*	653962-001	Mandatory[1]
	j) 400-GB MLC solid state drive*	653963-001	Mandatory[1]
	k) 450-GB ENT hard drive*	653956-001	Mandatory[1]
	l) 500-GB MDL hard drive*	653953-001	Mandatory[1]
	m) 600-GB ENT hard drive*	653957-001	Mandatory[1]
	n) 800-GB MLC solid state drive*	653964-001	Mandatory[1]
	o) 900-GB ENT hard drive*	653971-001	Mandatory[1]
	p) 1-TB MDL hard drive*	653954-001	Mandatory[1]
	q) 1.2-TB ENT hard drive*	718292-001	Mandatory[1]
	SATA drives	—	—
	a) 80-GB EV solid state drive*	734562-001	Mandatory[1]
	b) 100-GB MLC solid state drive*	653965-001	Mandatory[1]
	c) 120-GB EV solid state drive*	718136-001	Mandatory[1]
	d) 128-GB solid state drive*	747960-001	Mandatory[1]
	e) 200-GB MLC solid state drive*	653966-001	Mandatory[1]

Item Ha	Description	Spare part number	Customer self repair (on page 6)
	f) 240-GB EV solid state drive*	718137-001	Mandatory[1]
	g) 256-GB EV solid state drive*	713480-001	Mandatory[1]
	h) 300-GB EV solid state drive*	739954-001	Mandatory[1]
	i) 400-GB MLC solid state drive*	653967-001	Mandatory[1]
	j) 480-GB EV solid state drive*	742518-001	Mandatory[1]
	k) 480-GB EV solid state drive*	741569-001	Mandatory[1]
	l) 480-GB EV solid state drive*	735501-001	Mandatory[1]
	m) 480-GB EV solid state drive*	718138-001	Mandatory[1]
	n) 500-GB MDL hard drive*	656107-001	Mandatory[1]
	o) 600-GB EV solid state drive*	739959-001	Mandatory[1]
	p) 800-GB EV solid state drive*	718139-001	Mandatory[1]
	q) 1-TB MDL hard drive*	656108-001	Mandatory[1]
23	8-bay SFF drive cage assembly	688038-001	Optional[2]
24	Front panel assembly	687958-001	Optional[2]
25	Optical drives (9.5 mm, 0.37 in)	—	—
	a) Optical drive module	675601-001	Mandatory[1]
	b) Slimline 8x/24x DVD-ROM drive*	652294-001	Mandatory[1]
	c) Slimline 8x DVD+R/RW drive*	652295-001	Mandatory[1]
26	Power supplies	—	—
	a) HPE 460 W CS Gold Hot-plug Power Supply (92% efficiency)	511777-001	Mandatory[1]
	b) HPE 460 W CS Platinum Hot plug Power Supply (94% efficiency)*	742515-001	Mandatory[1]
	c) HPE 460 W CS Platinum Plus Hot Plug Power Supply (94% efficiency)*	660184-001	Mandatory[1]
	d) HPE 750 W CS Gold Hot-plug Power Supply (92% efficiency)*	511778-001	Mandatory[1]
	e) HPE 750 W CS Platinum Hot plug Power Supply (94% efficiency)*	742516-001	Mandatory[1]
	f) HPE 750 W CS Platinum Plus Hot Plug Power Supply (94% efficiency)*	660183-001	Mandatory[1]
	g) HPE 750 W CS Titanium Hot-plug Power Supply (96% efficiency)*	700287-001	Mandatory[1]
	h) HPE 750 W CS -48 V DC Hot Plug Power Supply (94% efficiency)*	639173-001	Mandatory[1]
	i) HPE 1200 W CS Platinum Plus Hot-plug Power Supply (94% efficiency)*	660185-001	Mandatory[1]
27	DIMMs	—	—
	a) 2 GB, single-rank x8 PC3-12800E-11	684033-001	Mandatory[1]
	b) 2 GB, single-rank x8 PC3L-10600E-9*	664694-001	Mandatory[1]
	c) 2 GB, single-rank x8 PC3L-12800E-11*	715279-001	Mandatory[1]

Item Ha	Description	Spare part number	Customer self repair (on page 6)
	d) 4 GB, single-rank x4 PC3-12800R-11*	664689-001	Mandatory[1]
	e) 4 GB, single-rank x4 PC3L-10600R-9*	664688-001	Mandatory[1]
	f) 4 GB, single-rank, x4 PC3L-12800R-11*	715282-001	Mandatory[1]
	g) 4 GB, dual-rank x8 PC3-12800E-11*	684034-001	Mandatory[1]
	h) 4 GB, dual-rank x8 PC3L-10600E-9*	664695-001	Mandatory[1]
	i) 4 GB, dual-rank, x8 PC3L-12800E-11*	715280-001	Mandatory[1]
	j) 8 GB, single-rank x4 PC3-12800R-11*	664691-001	Mandatory[1]
	k) 8 GB, single-rank, x4 PC3L-12800R-11*	735302-001	Mandatory[1]
	l) 8 GB, dual-rank x4 PC3-12800R-11*	698807-001	Mandatory[1]
	m) 8 GB, dual-rank x4 PC3L-10600R-9*	664690-001	Mandatory[1]
	n) 8 GB, dual-rank, x4 PC3L-12800R-11*	715283-001	Mandatory[1]
	o) 8 GB, dual-rank x8 PC3-12800E-11*	684035-001	Mandatory[1]
	p) 8 GB, dual-rank x8 PC3L-10600E-9*	664696-001	Mandatory[1]
	q) 8 GB, dual-rank, x8, PC3L-12800E-11*	715281-001	Mandatory[1]
	r) 16 GB, dual-rank x4 PC3-12800R-11*	684031-001	Mandatory[1]
	s) 16 GB, dual-rank x4 PC3L-10600R-9*	664692-001	Mandatory[1]
	t) 16 GB, dual-rank, x4 PC3L-12800R-11*	715284-001	Mandatory[1]
	u) 32 GB, quad-rank x4 PC3L-10600L-9*	664693-001	Mandatory[1]
28	Processors (include alcohol pad and thermal compound)**	—	—
	Intel Xeon Processors E5-2400 processors	—	—
	a) 1.80-GHz Intel Xeon E5-2403 processor, 4C, 10 MB, 80 W	676949-001	Optional[2]
	b) 1.80-GHz Intel Xeon E5-2450L processor, 8C, 20 MB, 70 W*	676951-001	Optional[2]
	c) 1.90-GHz Intel Xeon E5-2420 processor, 6C, 15 MB, 95 W*	676947-001	Optional[2]
	d) 2.00-GHz Intel Xeon E5-2430L processor, 6C, 15 MB, 60 W*	676950-001	Optional[2]
	e) 2.10-GHz Intel Xeon E5-2450 processor, 8C, 20 MB, 95 W*	676944-001	Optional[2]
	f) 2.20-GHz Intel Xeon E5-2407 processor, 4C, 10 MB, 80 W*	676948-001	Optional[2]
	g) 2.20-GHz Intel Xeon E5-2430 processor, 6C, 15 MB, 95 W*	676946-001	Optional[2]
	h) 2.30-GHz Intel Xeon E5-2470 processor, 8C, 20 MB, 95 W*	676943-001	Optional[2]
	i) 2.40-GHz Intel Xeon E5-2440 processor, 6C, 15 MB, 95 W*	676945-001	Optional[2]
	Intel Xeon Processors E5-2400 v2 processors	—	—
	a) 1.70-GHz Intel Xeon E5-2450L v2 processor, 10C,25 MB, 60 W*	729108-001	Optional[2]

Item Ha	Description	Spare part number	Customer self repair (on page 6)
	b) 1.80-GHz Intel Xeon E5-2403 v2 processor, 4C, 10 MB, 80 W*	729109-001	Optional[2]
	c) 1.90-GHz Intel Xeon E5-2440 v2 processor, 8C, 20 MB, 95 W*	729113-001	Optional[2]
	d) 2.20-GHz Intel Xeon E5-2420 v2 processor, 6C, 15 MB, 80 W*	729111-001	Optional[2]
	e) 2.40-GHz Intel Xeon E5-2407 v2 processor, 4C, 10 MB, 80 W*	729110-001	Optional[2]
	f) 2.40-GHz Intel Xeon E5-2430L v2 processor, 6C, 15 MB, 60 W*	729107-001	Optional[2]
	g) 2.40-GHz Intel Xeon E5-2470 v2 processor, 10C, 25 MB, 95 W*	729115-001	Optional[2]
	h) 2.50-GHz Intel Xeon E5-2430 v2 processor, 6C, 15 MB, 80 W*	729112-001	Optional[2]
	i) 2.50-GHz Intel Xeon E5-2450 v2 processor, 8C, 20 MB, 95 W*	729114-001	Optional[2]
29	Heatsink	677090-001	Optional[2]
30	Mini-SAS Y-cable kit	754375-001	Mandatory[1]
	a) 540-mm Mini-SAS Y-cable*	—	—
	b) 690-mm Mini-SAS Y-cable*	—	—
	c) 780-mm Mini-SAS Y-cable*	—	—
	d) 850-mm Mini-SAS Y-cable (with cable clip)*, ‡	—	—
31	Miscellaneous drive cable kit	687954-001	Mandatory[1]
	a) 500.4 mm (19.7 in) Mini-SAS cable*	—	—
	b) 698.5 mm (27.5 in) Mini-SAS cable*	—	—
	c) Two-port SATA cable*	—	—
32	Power cable kit	687955-001	Mandatory[1]
	a) 8-bay SFF drive cage power cable*	—	—
	b) 8-bay LFF drive cage power cable*	—	—
	c) 12-bay LFF and 25-bay SFF drive cage power cables*	—	—
	d) Fan board power cable*	—	—
	e) GPU power cable*	—	—
33	Rear drive cage cable kit	687956-001	Mandatory[1]
	a) SATA cables*	—	—
	b) Sideband signal cable*	—	—
34	Trusted Platform Module*	505836-001	No[3]

* Not shown
** All processors in this HPE ProLiant server must have the same cache size, speed, number of cores, and rated maximum power consumption.
† The HPE Dynamic Smart Array B320i controller embedded in this riser board option requires an HPE Smart Array SAS License Key to support SAS drives. For information on obtaining a license key, see the Hewlett Packard Enterprise website. (http://www.hpe.com/info/saslicense) To activate the license key, use HPE SSA. For detailed instructions on how to activate the license key, see the *HPE Smart Storage Administrator User Guide* on the Hewlett Packard Enterprise website (http://www.hpe.com/info/enterprise/docs).
‡ This Mini-SAS Y-cable is not for use in this server.

[1]Mandatory—Parts for which customer self repair is mandatory. If you request Hewlett Packard Enterprise to replace these parts, you will be charged for the travel and labor costs of this service.
[2]Optional—Parts for which customer self repair is optional. These parts are also designed for customer self repair. If, however, you require that Hewlett Packard Enterprise replace them for you, there may or may not be additional charges, depending on the type of warranty service designated for your product.
[3]No—Some Hewlett Packard Enterprise parts are not designed for customer self repair. In order to satisfy the customer warranty, Hewlett Packard Enterprise requires that an authorized service provider replace the part. These parts are identified as "No" in the Illustrated Parts Catalog.

[1]Obligatoire—Pièces pour lesquelles le client doit procéder lui-même aux réparations. Si vous demandez à Hewlett Packard Enterprise de procéder au remplacement de ces pièces, les frais de transport et de main d'œuvre pour ce service vous seront facturés.
[2]Facultatif—Pièces pour lesquelles une réparation par le client est facultative. Ces pièces sont également conçues pour que le client puisse procéder lui-même aux réparations. Cependant, les frais supplémentaires engendrés par le remplacement de ces pièces par Hewlett Packard Enterprise dépendent du type de service de garantie désigné pour votre produit.
[3]Non—Certaines pièces Hewlett Packard Enterprise ne sont pas conçues pour être remplacées par le client. Afin de se conformer aux exigences de la garantie la garantie du client, Hewlett Packard Enterprise demande à un fournisseur de services agréé de procéder au remplacement de la pièce. Ces pièces sont signaléespar le mot « Non » dans le Catalogue de pièces illustré.

[1]Obbligatorio—Parti per le quali il cliente è tenuto a effettuare autonomamente la riparazione. Se si richiede l'intervento di Hewlett Packard Enterprise per la sostituzione di queste parti, al cliente verranno addebitate le spese di viaggio e manodopera dell'operazione.
[2]Facoltativo—Parti per le quali la riparazione in autonomia da parte del cliente è facoltativa. Queste parti sono progettate per consentire anche la riparazione da parte del cliente. Tuttavia, se il cliente richiedel'intervento di Hewlett Packard Enterprise per la sostituzione, potrebbero essere addebitate spese aggiuntive a seconda del tipo di garanzia in assistenza previsto per il prodotto.
[3]No—Alcune parti Hewlett Packard Enterprise non sono progettate la riparazione in autonomia da parte del cliente. In base a quanto previsto dalla garanzia per il cliente, Hewlett Packard Enterprise richiede l'intervento di un tecnico autorizzato per la sostituzione della parte. Queste parti sono contrassegnate con"No"nel catalogo parti illustrato.

[1]Zwingend—Teile, für die das Customer Self Repair-Verfahren zwingend vorgegeben ist. Wenn Sie den Austausch dieser Teile von Hewlett Packard Enterprisevornehmen lassen, werden Ihnen die Anfahrt- und Arbeitskosten für diesen Service berechnet.
[2]Optional—Teile, für die das Customer Self Repair-Verfahren optional ist. Diese Teile sind auch für Customer Self Repair ausgelegt. Wenn Sie jedoch den Austausch dieser Teile von Hewlett Packard Enterprisevornehmen lassen möchten, können bei diesem Service je nach den für Ihr Produkt vorgesehenen Garantiebedingungen zusätzliche Kosten anfallen.
[3]Nein—Einige Hewlett Packard Enterprise Teile sind nicht für Customer Self Repair ausgelegt. Um den Garantieanspruch des Kunden zu erfüllen, muss das Teil von einem Hewlett Packard Enterprise Servicepartner ersetzt werden. Im illustrierten Teilekatalog sind diese Teile mit „No“ bzw. „Nein“ gekennzeichnet.

[1]Obligatorio—Componentes cuya reparación por parte del usuario es obligatoria. Si solicita a Hewlett Packard Enterprise que realice la sustitución de estos componentes, tendrá que hacerse cargo de los gastos de desplazamiento y de mano de obra de dicho servicio.
[2]Opcional—Componentes cuya reparación por parte del usuario es opcional. Estos componentes también están diseñados para que puedan ser reparados por el usuario. Sin embargo, si precisa que Hewlett Packard Enterprise realice su sustitución, puede o no conllevar costes adicionales, dependiendo del tipo de servicio de garantía correspondiente al producto.
[3]No—Algunos componentes de Hewlett Packard Enterprise no están diseñados para que puedan ser reparados por el usuario. Para que el usuario haga valer su garantía, Hewlett Packard Enterprise pone como condición que un proveedor de servicios autorizado realice la sustitución de estos componentes. Dichos componentes se identifican con la palabra "No" en el catálogo ilustrado de componentes.

[1]Verplicht—Onderdelen die de klant zelf moet vervangen. Als u Hewlett Packard Enterprise vraagt deze onderdelen te vervangen, worden er reis- en arbeidskosten voor deze service in rekening gebracht.
[2]Optioneel—Onderdelen die de klant zelf kan vervangen. Deze onderdelen zijn ook ontworpen om door de klant zelf te worden vervangen. Als u Hewlett Packard Enterprise verzoekt om deze te vervangen, kan het zijn dat hiervoor extra kosten in rekening worden gebracht, afhankelijk van het soort garantie dat op uw product van toepassing is.
[3]Geen—Sommige onderdelen van Hewlett Packard Enterprise zijn niet ontworpen om door de klant zelf te worden vervangen. Om te voldoen aan de garantievoorwaarden eist Hewlett Packard Enterprise dat een geautoriseerde

serviceverlener het onderdeel vervangt. Deze onderdelen worden aangeduid met 'Geen' in de geïllustreerde onderdelencatalogus.

[1]Obrigatório—Peças cujo reparo feito pelo cliente é obrigatório. Se desejar que a Hewlett Packard Enterprise substitua essas peças, serão cobradas as despesas de transporte e mão-de-obra do serviço.
[2]Opcional—Peças cujo reparo feito pelo cliente é opcional. Essas peças também são projetadas para o reparo feito pelo cliente. No entanto, se desejar que a Hewlett Packard Enterprise as substitua, pode haver ou não a cobrança de taxa adicional, dependendo do tipo de serviço de garantia destinado ao produto.
[3]Não—Algumas peças da Hewlett Packard Enterprise não são projetadas para o reparo feito pelo cliente. A fim de cumprir a garantia do cliente, a Hewlett Packard Enterprise exige que um técnico autorizado substitua a peça. Essas peças estão identificadas com a marca "No" (Não), no catálogo de peças ilustrado.

[1]Mandatory：必須 — カスタマーセルフリペアが必須の部品。当該部品について、もしもお客様がHewlett Packard Enterpriseに交換作業を依頼される場合には、その修理サービスに関する交通費および人件費がお客様に請求されます。
[2]Optional：任意 — カスタマーセルフリペアが任意である部品。この部品もカスタマーセルフリペア用です。当該部品について、もしもお客様がHewlett Packard Enterpriseに交換作業を依頼される場合には、お買い上げの製品に適用される保証サービス内容の範囲内においては、別途費用を負担していただくことなく保証サービスを受けることができます。
[3]No：除外 — Hewlett Packard Enterprise製品の一部の部品は、カスタマーセルフリペアの対象外です。製品の保証を継続するためには、Hewlett Packard EnterpriseまたはHewlett Packard Enterprise正規保守代理店による交換作業が必須となります。部品カタログには、当該部品がカスタマーセルフリペア除外品である旨が記載されています。

[1]Mandatory — 客户必须自行维修的部件。如果您请求 Hewlett Packard Enterprise 更换这些部件，则必须为该服务支付差旅费和人工费用。
[2]Optional — 客户可以选择是否自行维修的部件。这些部件也是为客户自行维修设计的。不过，如果您要求 Hewlett Packard Enterprise 为您更换这些部件，则根据为您的产品指定的保修服务类型，Hewlett Packard Enterprise 可能收取或不再收取任何附加费用。
[3]No — 某些 Hewlett Packard Enterprise 部件的设计并未考虑客户自行维修。为了满足客户保修的需要，Hewlett Packard Enterprise 要求授权服务提供商更换相关部件。这些部件在部件图解目录中标记为“否”。

[1]Mandatory — 客戶自行維修所使用的零件是強制性的。如果您要求 Hewlett Packard Enterprise 更換這些零件，Hewlett Packard Enterprise 將會向您收取此服務所需的外出費用與勞動成本。
[2]Optional — 客戶自行維修所使用的零件是選購的。這些零件也設計用於客戶自行維修之用。不過，如果您要求 Hewlett Packard Enterprise 為您更換，則可能需要也可能不需要負擔額外的費用，端視針對此產品指定的保固服務類型而定。
[3]No — 某些 Hewlett Packard Enterprise 零件沒有消費者可自行維修的設計。為符合客戶保固，Hewlett Packard Enterprise 需要授權的服務供應商更換零件。這些零件在圖示的零件目錄中，被標示為「否」。

[1]Mandatory — 고객 셀프 수리가 의무 사항인 필수 부품. 사용자가 Hewlett Packard Enterprise에 이 부품의 교체를 요청할 경우 해당 서비스에 대한 출장비 및 작업비가 청구됩니다.
[2]Optional — 고객 셀프 수리가 선택 사항인 부품. 이러한 부품들도 고객 셀프 수리가 가능하도록 설계되었습니다. 하지만 사용자가 Hewlett Packard Enterprise에 이러한 부품의 교체를 요청할 경우 사용자가 구입한 제품에 해당하는 보증 서비스 유형에 따라 추가 비용 없이 교체가 가능할 수 있습니다.
[3]No — 일부 Hewlett Packard Enterprise 부품은 고객 셀프 수리가 불가능하도록 설계되었습니다. Hewlett Packard Enterprise는 만족스러운 고객 보증을 위해 공인 서비스 제공업체를 통해 부품을 교체하도록 요구하고 있습니다. 이러한 부품들은 Illustrated Parts Catalog에 “No”라고 표시되어 있습니다.

Removal and replacement procedures

Required tools

You need the following items for some procedures:

- T-25 Torx screwdriver (for screws located inside the front panel quick-release levers)
- T-10/T-15 Torx screwdriver
- HPE Insight Diagnostics (on page 81)

Safety considerations

Before performing service procedures, review all the safety information.

Preventing electrostatic discharge

To prevent damaging the system, be aware of the precautions you need to follow when setting up the system or handling parts. A discharge of static electricity from a finger or other conductor may damage system boards or other static-sensitive devices. This type of damage may reduce the life expectancy of the device.

To prevent electrostatic damage:

- Avoid hand contact by transporting and storing products in static-safe containers.
- Keep electrostatic-sensitive parts in their containers until they arrive at static-free workstations.
- Place parts on a grounded surface before removing them from their containers.
- Avoid touching pins, leads, or circuitry.
- Always be properly grounded when touching a static-sensitive component or assembly.

Symbols on equipment

The following symbols may be placed on equipment to indicate the presence of potentially hazardous conditions.



This symbol indicates the presence of hazardous energy circuits or electric shock hazards. Refer all servicing to qualified personnel.
WARNING: To reduce the risk of injury from electric shock hazards, do not open this enclosure. Refer all maintenance, upgrades, and servicing to qualified personnel.



This symbol indicates the presence of electric shock hazards. The area contains no user or field serviceable parts. Do not open for any reason.
WARNING: To reduce the risk of injury from electric shock hazards, do not open this enclosure.



This symbol on an RJ-45 receptacle indicates a network interface connection.
WARNING: To reduce the risk of electric shock, fire, or damage to the equipment, do not plug telephone or telecommunications connectors into this receptacle.

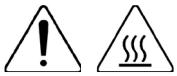

This symbol indicates the presence of a hot surface or hot component. If this surface is contacted, the potential for injury exists.
WARNING: To reduce the risk of injury from a hot component, allow the surface to cool before touching.

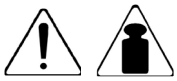

This symbol indicates that the component exceeds the recommended weight for one individual to handle safely.
WARNING: To reduce the risk of personal injury or damage to the equipment, observe local occupational health and safety requirements and guidelines for manual material handling.

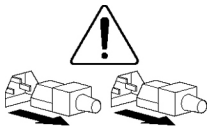

These symbols, on power supplies or systems, indicate that the equipment is supplied by multiple sources of power.
WARNING: To reduce the risk of injury from electric shock, remove all power cords to completely disconnect power from the system.

Server warnings and cautions

WARNING: This server is very heavy. To reduce the risk of personal injury or damage to the equipment:

- Observe local occupational health and safety requirements and guidelines for manual material handling.
- Get help to lift and stabilize the product during installation or removal, especially when the product is not fastened to the rails. Hewlett Packard Enterprise recommends that a minimum of two people are required for all rack server installations. A third person may be required to help align the server if the server is installed higher than chest level.
- Use caution when installing the server in or removing the server from the rack; it is unstable when not fastened to the rails.

WARNING: To reduce the risk of personal injury from hot surfaces, allow the drives and the internal system components to cool before touching them.

WARNING: To reduce the risk of personal injury, electric shock, or damage to the equipment, remove the power cord to remove power from the server. The front panel Power On/Standby button does not completely shut off system power. Portions of the power supply and some internal circuitry remain active until AC power is removed.

CAUTION: Protect the server from power fluctuations and temporary interruptions with a regulating uninterruptible power supply. This device protects the hardware from damage caused by power surges and voltage spikes and keeps the system in operation during a power failure.

CAUTION: Do not operate the server for long periods with the access panel open or removed. Operating the server in this manner results in improper airflow and improper cooling that can lead to thermal damage.

Rack warnings

⚠ **WARNING:** To reduce the risk of personal injury or damage to the equipment, be sure that:

- The leveling jacks are extended to the floor.
- The full weight of the rack rests on the leveling jacks.
- The stabilizing feet are attached to the rack if it is a single-rack installation.
- The racks are coupled together in multiple-rack installations.
- Only one component is extended at a time. A rack may become unstable if more than one component is extended for any reason.

⚠ **WARNING:** To reduce the risk of personal injury or equipment damage when unloading a rack:

- At least two people are needed to safely unload the rack from the pallet. An empty 42U rack can weigh as much as 115 kg (253 lb), can stand more than 2.1 m (7 ft) tall, and might become unstable when being moved on its casters.
- Never stand in front of the rack when it is rolling down the ramp from the pallet. Always handle the rack from both sides.

⚠ **WARNING:** To reduce the risk of personal injury or damage to the equipment, adequately stabilize the rack before extending a component outside the rack. Extend only one component at a time. A rack may become unstable if more than one component is extended.

⚠ **WARNING:** When installing a server in a telco rack, be sure that the rack frame is adequately secured at the top and bottom to the building structure.

Preparation procedures

To access some components and perform certain service procedures, you must perform one or more of the following procedures:

- Access the product front panel ("Remove the security bezel (optional)" on page 30).
- Power down the server (on page 30).

  If you must remove a server from a rack or a non-hot-plug component from a server, power down the server.
- Extend the server from the rack (on page 30).

  If you are performing service procedures in a Hewlett Packard Enterprise, Compaq branded, Telco, or third-party rack cabinet, you can use the locking feature of the rack rails to support the server and gain access to internal components.

  For more information about Telco rack solutions, see the RackSolutions website (http://www.racksolutions.com/hpe).
- Access the product rear panel (on page 32).
- Remove the server from the rack (on page 33).

  If the rack environment, cabling configuration, or the server location in the rack creates awkward conditions, remove the server from the rack.

Remove the security bezel (optional)

To access the front panel components, unlock and then remove the security bezel.

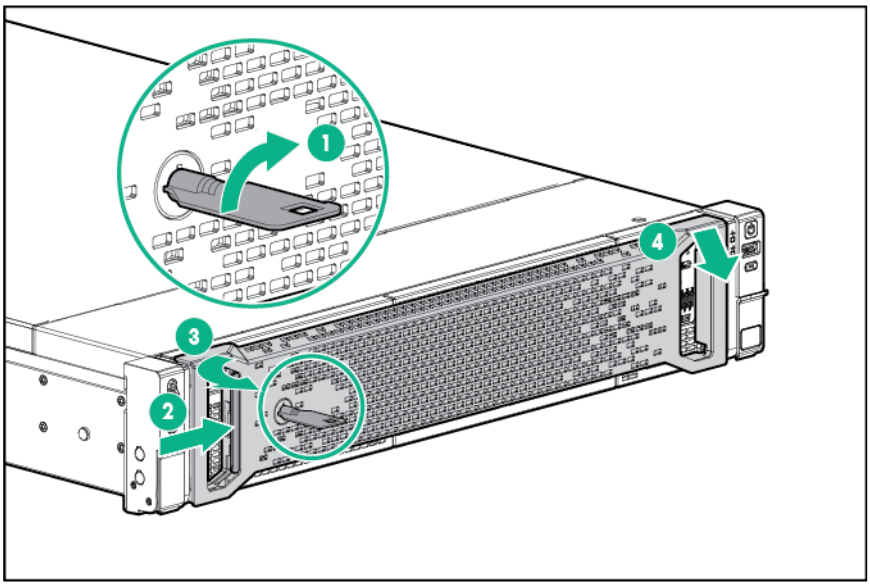

Power down the server

Before powering down the server for any upgrade or maintenance procedures, perform a backup of critical server data and programs.

WARNING: To reduce the risk of personal injury, electric shock, or damage to the equipment, remove the power cord to remove power from the server. The front panel Power On/Standby button does not completely shut off system power. Portions of the power supply and some internal circuitry remain active until AC/DC power is removed.

IMPORTANT: When the server is in standby mode, auxiliary power is still being provided to the system.

To power down the server, use one of the following methods:

- Press and release the Power On/Standby button.

  This method initiates a controlled shutdown of applications and the OS before the server enters standby mode.

- Press and hold the Power On/Standby button for more than 4 seconds to force the server to enter standby mode.

  This method forces the server to enter standby mode without properly exiting applications and the OS. If an application stops responding, you can use this method to force a shutdown.

- Use a virtual power button selection through iLO 4.

  This method initiates a controlled remote shutdown of applications and the OS before the server enters standby mode.

Before proceeding, verify the server is in standby mode by observing that the system power LED is amber.

Extend the server from the rack

IMPORTANT: The requirement of extending or removing the server from the rack when performing installation and maintenance procedures depends on the rail system used:

- If using a ball-bearing rail system, you can perform most installations and maintenance by simply extending the server from the rack.
- If using a friction rail system, to perform installations or maintenance that requires access panel removal, remove the server from the rack.

To extend the server from a Hewett Packard Enterprise, Compaq-branded, Telco, or third-party rack:

1. Power down the server (on page 30).
2. Remove all power:
   a. Disconnect each power cord from the power source.
   b. Disconnect each power cord from the server.
3. Disconnect all peripheral cables.

WARNING: To reduce the risk of personal injury or equipment damage, be sure that the rack is adequately stabilized before extending a component from the rack.

WARNING: To reduce the risk of personal injury, be careful when pressing the server rail-release latches and sliding the server into the rack. The sliding rails could pinch your fingers.

4. Pull down the quick release levers on each side of the server.
5. Extend the server on the rack rails until the server rail-release latches engage.

   If the server does not extend from the rack, use a T-25 Torx screwdriver to loosen the screws located within the lever housing.

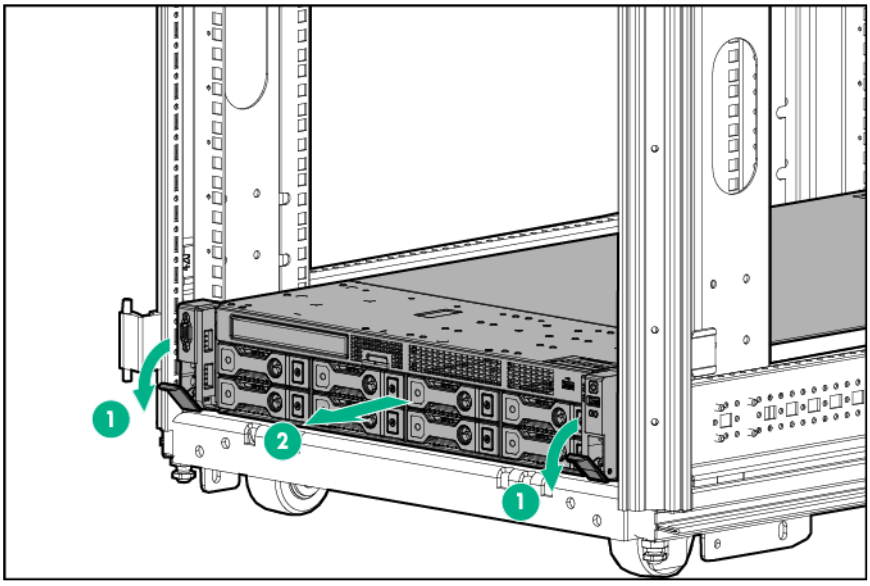

6. After performing the installation or maintenance procedure, slide the server into the rack.

For more information, see the documentation that ships with the rack mounting option.

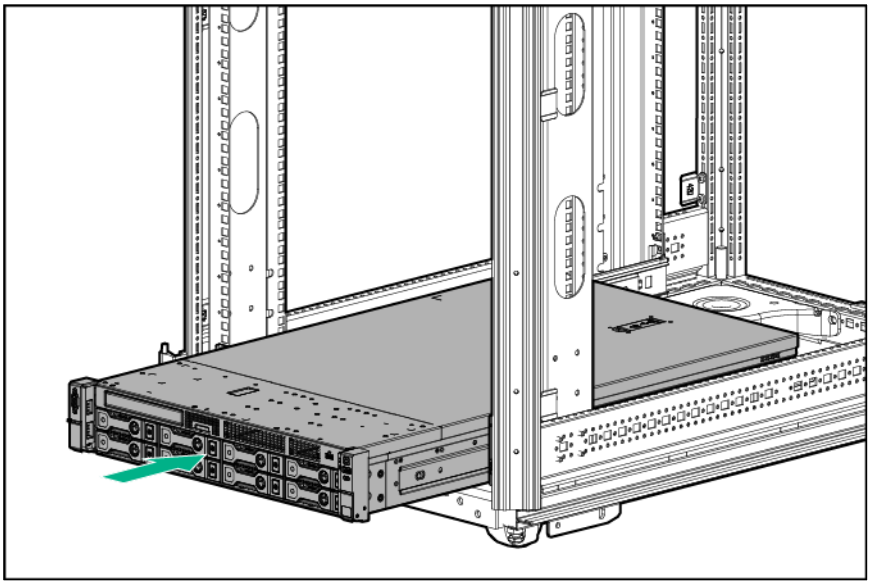

7. Connect the peripheral cables.
8. Connect each power cord to the server.
9. Connect each power cord to the power source.

Access the product rear panel

Opening the cable management arm

IMPORTANT: The cable management arm is not supported with the friction rail kit.

To access the server rear panel:

1. Release the cable management arm.

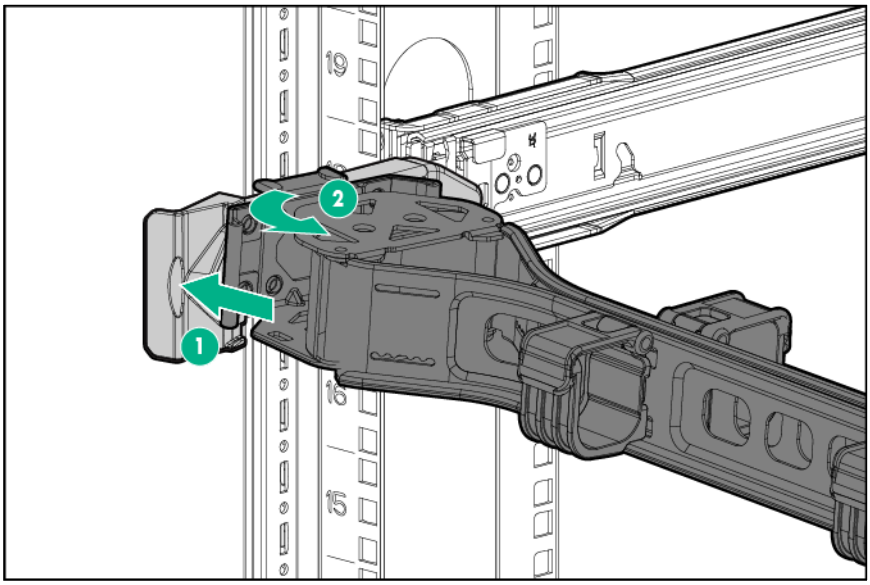

2. Open the cable management arm. The cable management arm can be right-mounted or left-mounted.

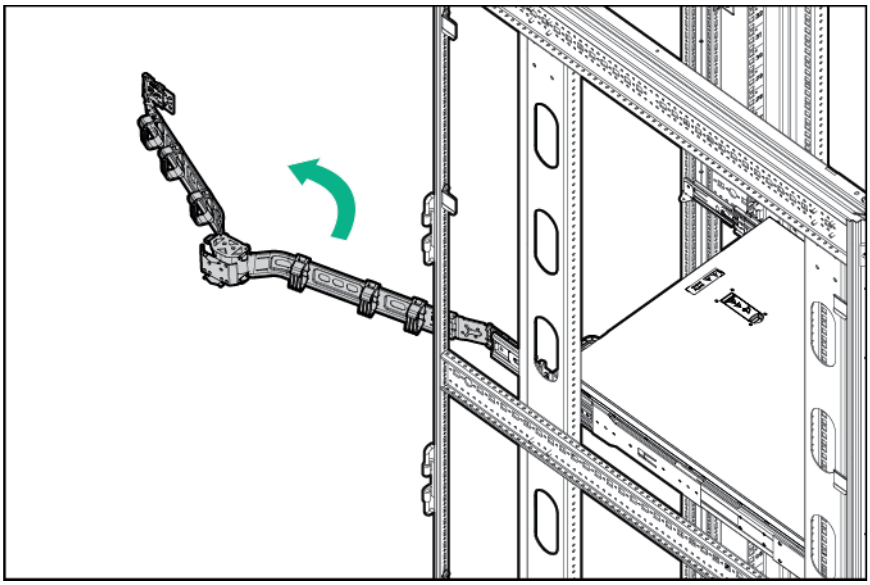

Remove the server from the rack

WARNING: This server is very heavy. To reduce the risk of personal injury or damage to the equipment:

- Observe local occupational health and safety requirements and guidelines for manual material handling.
- Get help to lift and stabilize the product during installation or removal, especially when the product is not fastened to the rails. Hewlett Packard Enterprise recommends that a minimum of two people are required for all rack server installations. A third person may be required to help align the server if the server is installed higher than chest level.
- Use caution when installing the server in or removing the server from the rack; it is unstable when not fastened to the rails.

IMPORTANT: The requirement of extending or removing the server from the rack when performing installation and maintenance procedures depends on the rail system used:

- If using a ball-bearing rail system, you can perform most installations and maintenance by simply extending the server from the rack.
- If using a friction rail system, to perform installations or maintenance that requires access panel removal, remove the server from the rack.

To remove the server from a Hewlett Packard Enterprise, Compaq-branded, Telco, or third-party rack:

1. Power down the server (on page 30).
2. Disconnect all peripheral cables and power cords from the server rear panel.
3. Extend the server from the rack (on page 30).
4. Remove the server from the rack. For more information, see the documentation that ships with the rack mounting option.
5. Place the server on a sturdy, level surface.

Hot-plug drive blanks

CAUTION: To prevent improper cooling and thermal damage, do not operate the server unless all bays are populated with either a component or a blank.

To remove the component:

1. If installed, remove the security bezel ("Remove the security bezel (optional)" on page 30).
2. Remove the drive blank:
   - Hot-plug LFF drive blank

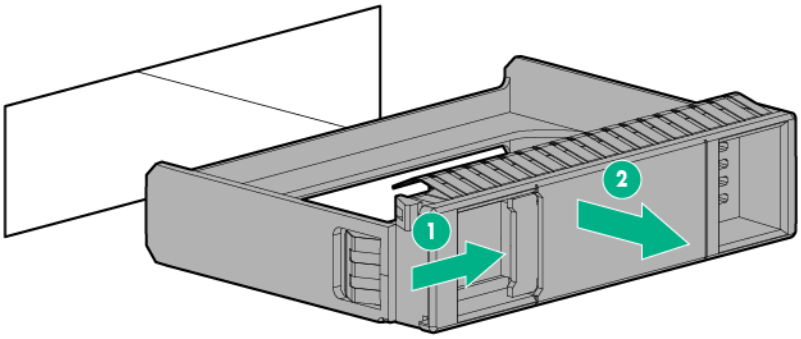

To replace the LFF drive blank, slide the component into the bay until it clicks.

   - Hot-plug SFF drive blank

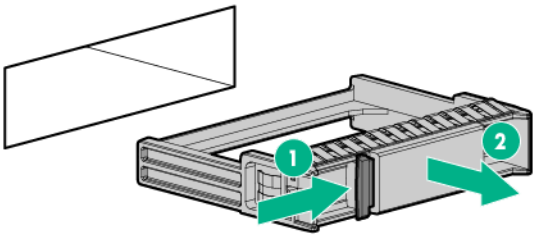

To replace the SFF drive blank, while pressing the release latch, slide the component into the bay until it is fully seated.

Hot-plug drive

CAUTION: To prevent improper cooling and thermal damage, do not operate the chassis unless all bays are populated with a component or a blank.

To remove the component:

1. Back up all server data on the drive.
2. If removing a drive from the rear drive cage, access the rear panel of the server ("Access the product rear panel" on page 32).
3. Determine the status of the drive from the drive LED definitions.

4. Remove the drive.

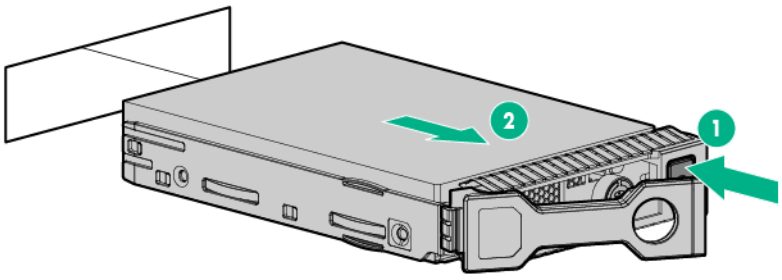

To replace the component, reverse the removal procedure.

Power supply blank

> **CAUTION:** To prevent improper cooling and thermal damage, do not operate the chassis unless all bays are populated with a component or a blank.

To remove the component:

1. Access the rear panel ("Access the product rear panel" on page 32).

> **WARNING:** To reduce the risk of personal injury from hot surfaces, allow the power supply or power supply blank to cool before touching it.

2. Remove the power supply blank.

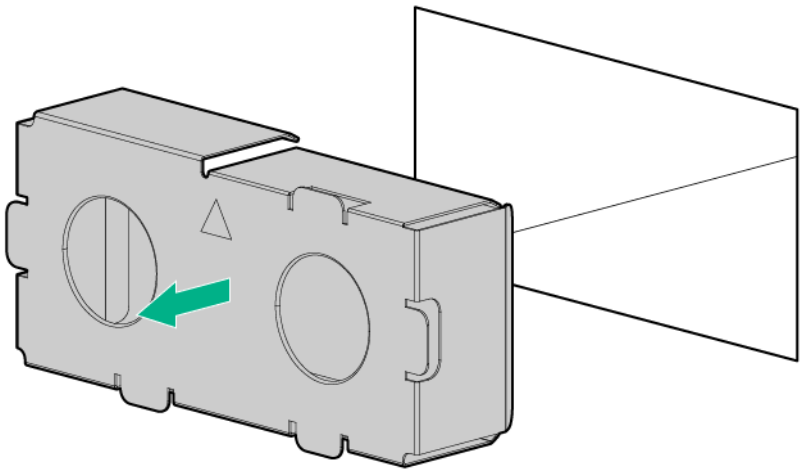

To replace the component, reverse the removal procedure.

Power supply

To remove the component:

1. Power down the server (on page 30).
2. Remove all power:
   a. Disconnect each power cord from the power source.
   b. Disconnect each power cord from the server.

3. If the server is using a DC power supply:
   a. Remove the safety cover.
   b. Remove the power ring tongues from the terminal block.
   c. Remove the ground (earthed) wire.

> ⚠ **WARNING:** To reduce the risk of personal injury from hot surfaces, allow the power supply or power supply blank to cool before touching it.

4. Remove the power supply.

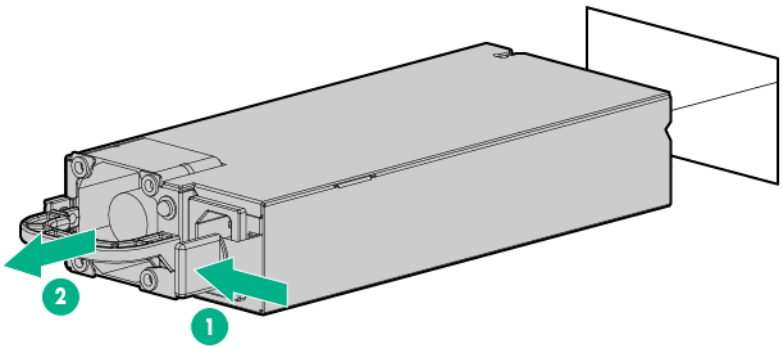

To replace the component, reverse the removal procedure.

Access panel

To remove the component:

> ⚠ **WARNING:** To reduce the risk of personal injury from hot surfaces, allow the drives and the internal system components to cool before touching them.

> △ **CAUTION:** Do not operate the server for long periods with the access panel open or removed. Operating the server in this manner results in improper airflow and improper cooling that can lead to thermal damage.

1. Power down the server (on page 30).
2. Remove all power:
   a. Disconnect each power cord from the power source.
   b. Disconnect each power cord from the server.
3. Do one of the following:
   - Extend the server from the rack (on page 30).
   - Remove the server from the rack (on page 33).
4. Open the access panel latch, slide the access panel to the rear of the chassis, and then remove the access panel.

   If the access panel latch is locked, use a T-15 Torx screwdriver to unlock the latch.

To replace the component, reverse the removal procedure.

Optical drive blank

> **CAUTION:** To prevent improper cooling and thermal damage, do not operate the chassis unless all bays are populated with a component or a blank.

Remove the optical drive blank

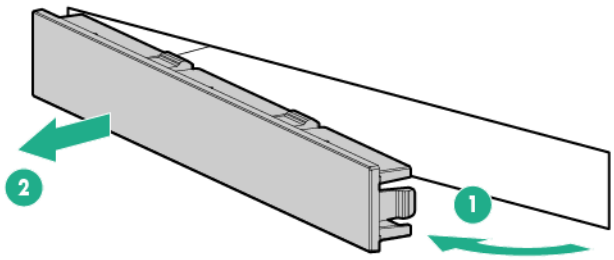

Retain the blank for future use.

To replace the component, reverse the removal procedure.

Optical drive

> **CAUTION:** To prevent improper cooling and thermal damage, do not operate the chassis unless all bays are populated with a component or a blank.

To remove the component:

1. Power down the server (on page 30).
2. Remove all power:
   a. Disconnect each power cord from the power source.
   b. Disconnect each power cord from the server.
3. Do one of the following:
   - Extend the server from the rack (on page 30).
   - Remove the server from the rack (on page 33).
4. Remove the access panel ("Access panel" on page 36).
5. Disconnect the optical drive cable from the drive.

6. Remove the optical drive.

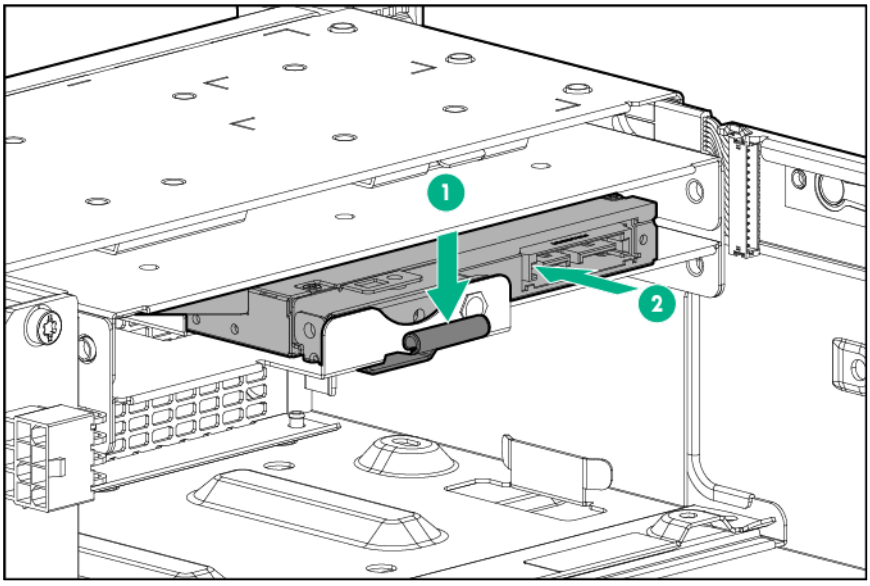

7. Remove the optical drive bracket ("Optical drive" on page 37).
   This bracket will be used to install the replacement optical drive.

To replace the component, reverse the removal procedure.

Optical drive bracket

To remove the component:

1. Power down the server (on page 30).
2. Remove all power:
   a. Disconnect each power cord from the power source.
   b. Disconnect each power cord from the server.
3. Do one of the following:
   - Extend the server from the rack (on page 30).
   - Remove the server from the rack (on page 33).
4. Remove the access panel ("Access panel" on page 36).
5. Remove the optical drive ("Optical drive" on page 37).

6. Remove the optical drive bracket.

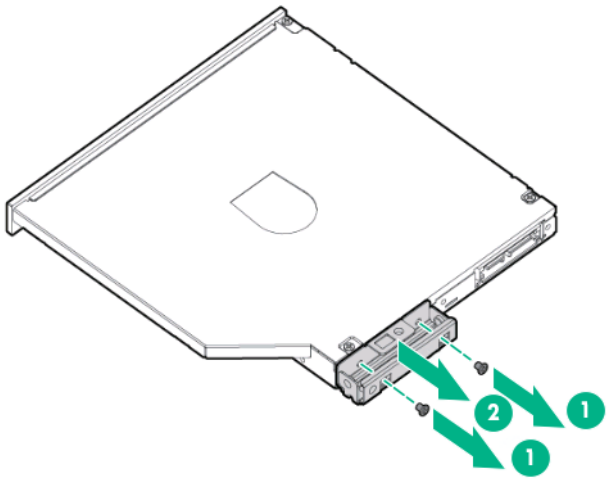

To replace the component, reverse the removal procedure.

Optical drive cage

To remove the component:

1. Power down the server (on page 30).
2. Remove all power:
   a. Disconnect each power cord from the power source.
   b. Disconnect each power cord from the server.
3. Do one of the following:
   - Extend the server from the rack (on page 30).
   - Remove the server from the rack (on page 33).
4. Remove the access panel ("Access panel" on page 36).
5. Remove the optical drive ("Optical drive" on page 37).
6. Remove the optical drive cage. Note that the number and location of the optical drive cage screws might differ based on the cage model installed in the server.

- Original release optical drive cage

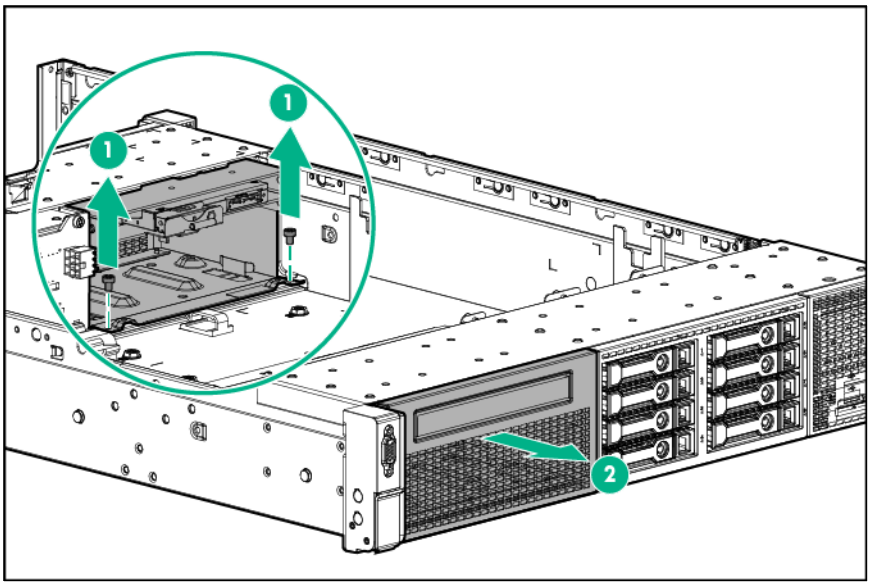

- Redesigned optical drive cage

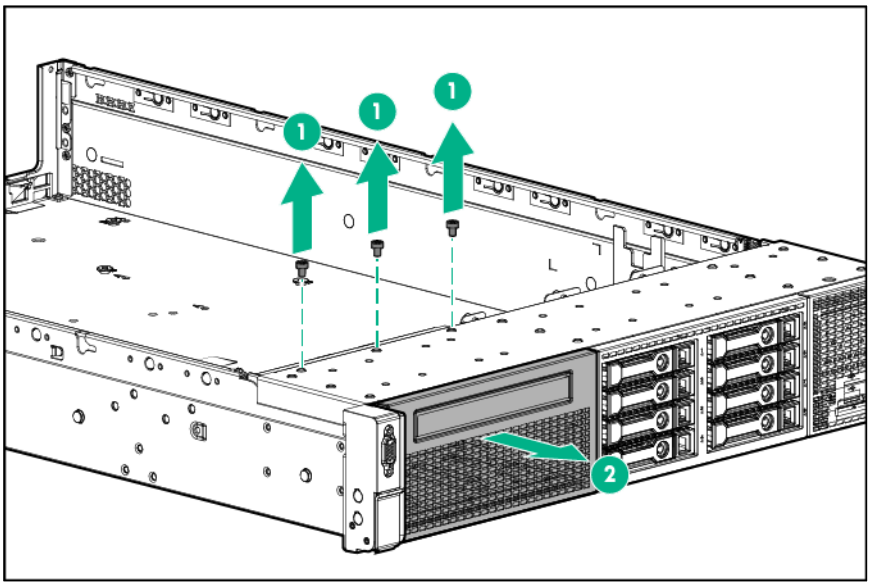

To install the component:

1. Install the new optical drive cage. Only the redesigned optical drive cage is available for spare installation.

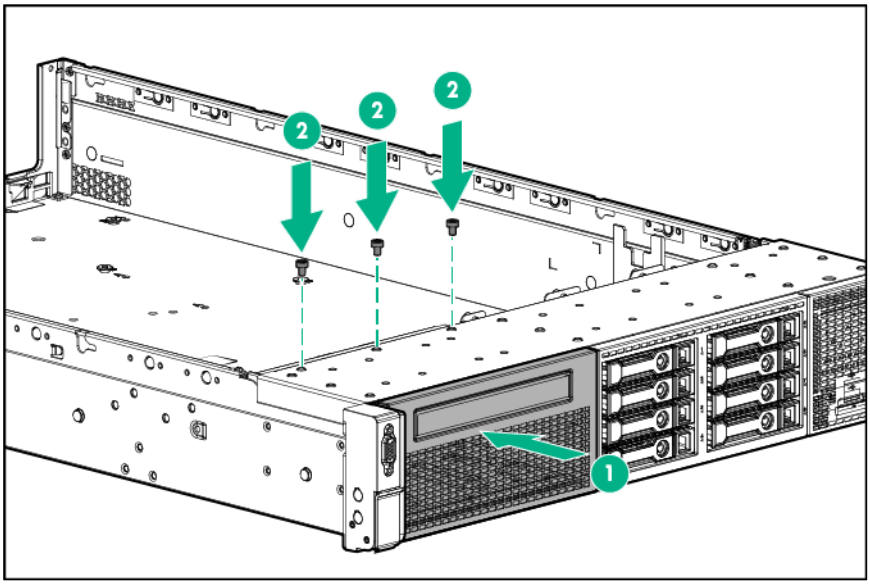

2. Perform steps 1-5 of the removal procedure in reverse sequence to complete the new optical drive cage installation.

Air baffle

To remove the component:

> △ **CAUTION:** For proper cooling, do not operate the server without the access panel, baffles, expansion slot covers, or blanks installed. If the server supports hot-plug components, minimize the amount of time the access panel is open.

1. Power down the server (on page 30).
2. Remove all power:
   a. Disconnect each power cord from the power source.
   b. Disconnect each power cord from the server.
3. Do one of the following:
   - Extend the server from the rack (on page 30).
   - Remove the server from the rack (on page 33).
4. Remove the access panel ("Access panel" on page 36).

5. Press and hold the release latches, and then remove the air baffle.

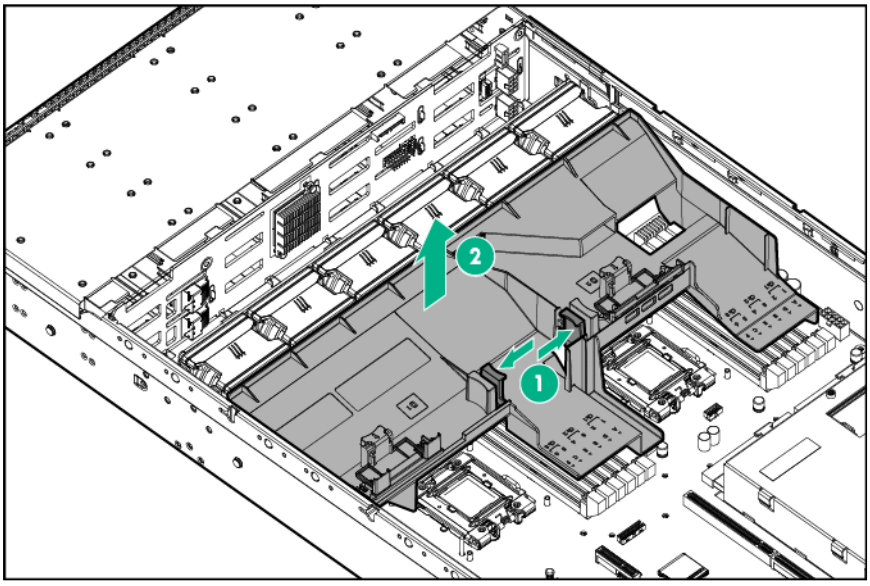

To replace the component, reverse the removal procedure.

Front drive cage assembly

The drive cage assembly includes the drive cage with backplane and the front panel assembly.

To remove the component:

1. Power down the server (on page 30).
2. Remove all power:
   a. Disconnect each power cord from the power source.
   b. Disconnect each power cord from the server.
3. Remove all installed drives ("Hot-plug drive" on page 34).
4. Remove the server from the rack (on page 33).
5. If the server is installed in a friction rail system, remove the friction rails from the chassis. For more information, see the documentation that ships with the rail system.
6. Remove the access panel ("Access panel" on page 36).
7. Disconnect the front panel assembly and the Discovery service cables from the system board ("Front panel cabling" on page 99).
8. Disconnect all cables connected to the drive cage backplane.
9. Remove the optical drive ("Optical drive" on page 37).

10. Remove the drive cage assembly.

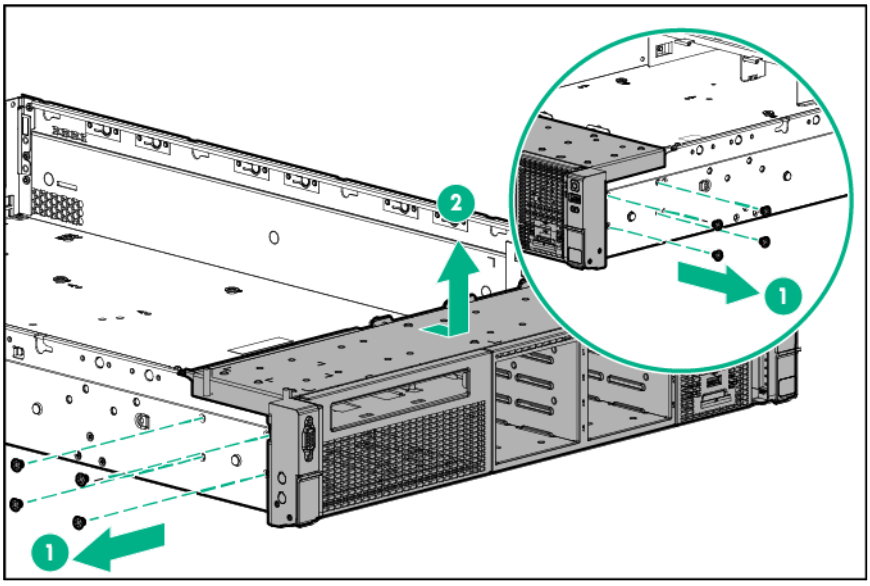

To replace the component, reverse the removal procedure.

Hot-plug fan blank and module

To provide sufficient airflow to the system if a fan fails, the server supports redundant fans.

Fan population guidelines

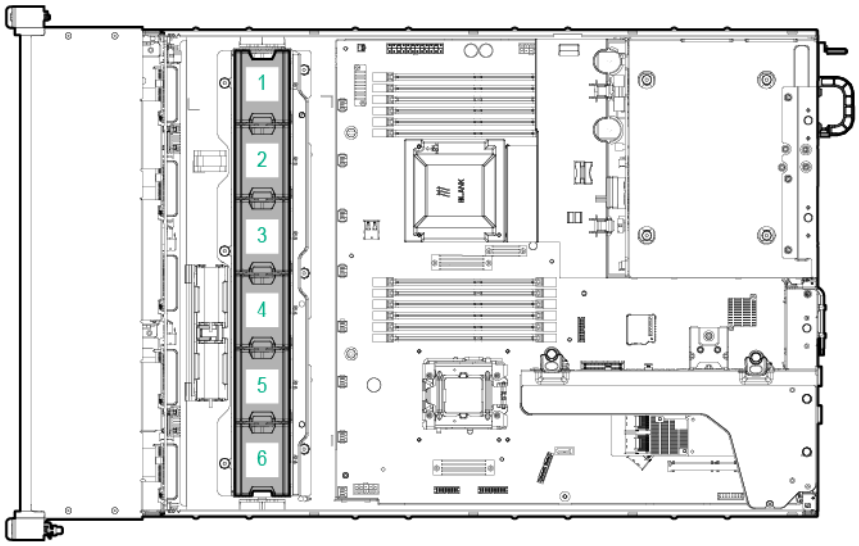

Configuration	Fan bay 1	Fan bay 2	Fan bay 3	Fan bay 4	Fan bay 5	Fan bay 6
One processor, nonredundant	Blank	Fan	Blank	Fan	Fan	Fan
One processor, redundant	Fan	Fan	Blank	Fan	Fan	Fan
Two processor, nonredundant	Fan	Fan	Fan	Fan	Fan	Blank

Two processor, redundant	Fan	Fan	Fan	Fan	Fan	Fan

- In a redundant fan mode:
  - If one fan fails, the system continues to operate without redundancy. This condition is indicated by a flashing amber Health LED.
  - If two fans fail, the system shuts down.
- The minimum fan requirement to make this server bootable is four fans in bays 2, 4, 5, and 6.

Removing a hot-plug fan blank or module if the server is installed in a ball-bearing rail system with the cable management arm

CAUTION: To prevent the potential for thermal damage and system shutdown, ensure that a functioning server has all feature bays populated with the required component or blank and the access panel is installed within 60 seconds of being serviced.

To remove the component:

1. Pull down the quick release levers on each side of the server.

   WARNING: To reduce the risk of personal injury or equipment damage, be sure that the rack is adequately stabilized before extending a component from the rack.

2. Extend the server on the rack rails until the server rail-release latches engage.

   If the server does not extend from the rack, use a T-25 Torx screwdriver to loosen the screws located within the lever housing.

3. Open the latch, slide the access panel to the rear of the chassis, and then remove the access panel.

   If the latch is locked, use a T-15 Torx screwdriver to unlock the latch.

4. Do one of the following:
   - Remove the fan blank.

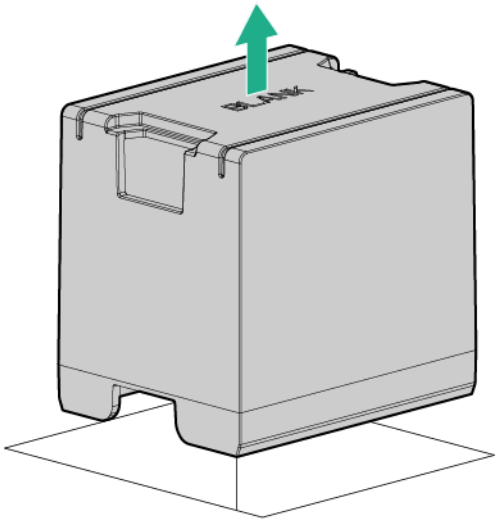

- Remove the fan module.

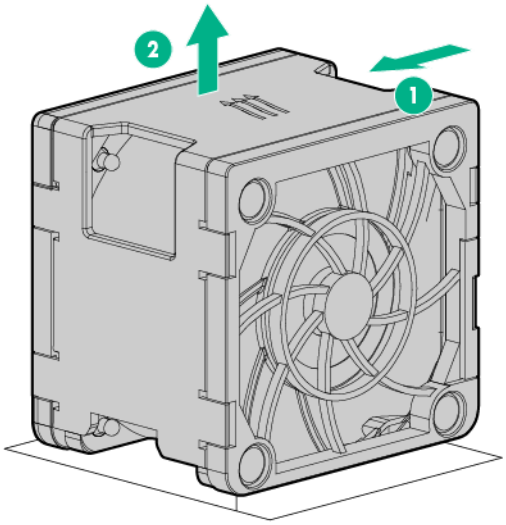

To replace the component, reverse the removal procedure.

If the fan replacement is intended to upgrade the server from a nonredundant to a redundant fan mode, reboot the server after fan installation.

Removing a hot-plug fan blank or module if the server is installed in a friction rail system

To remove the component:

1. Power down the server (on page 30).
2. Remove all power:
   a. Disconnect each power cord from the power source.
   b. Disconnect each power cord from the server.
3. Remove the server from the rack (on page 33).
4. Remove the access panel ("Access panel" on page 36).
5. Do one of the following:

- Remove the fan blank.

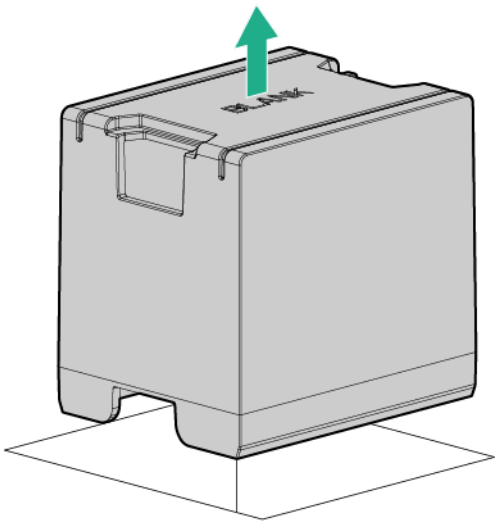

- Remove the fan module.

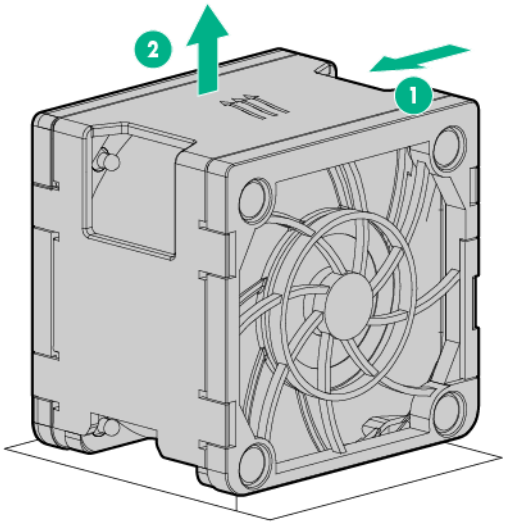

> **CAUTION:** To prevent improper cooling and thermal damage, do not operate the chassis unless all bays are populated with a component or a blank.

To replace the component, reverse the removal procedure.

Fan cage

To remove the component:

1. Power down the server (on page 30).
2. Remove all power:
   a. Disconnect each power cord from the power source.
   b. Disconnect each power cord from the server.
3. Do one of the following:

- Extend the server from the rack (on page 30).
- Remove the server from the rack (on page 33).

4. Remove the access panel ("Access panel" on page 36).
5. Remove the air baffle ("Air baffle" on page 41).
6. Disconnect all cables connected to the fan board.
7. Remove all fan blanks and modules ("Hot-plug fan blank and module" on page 43).
8. Remove the fan cage.

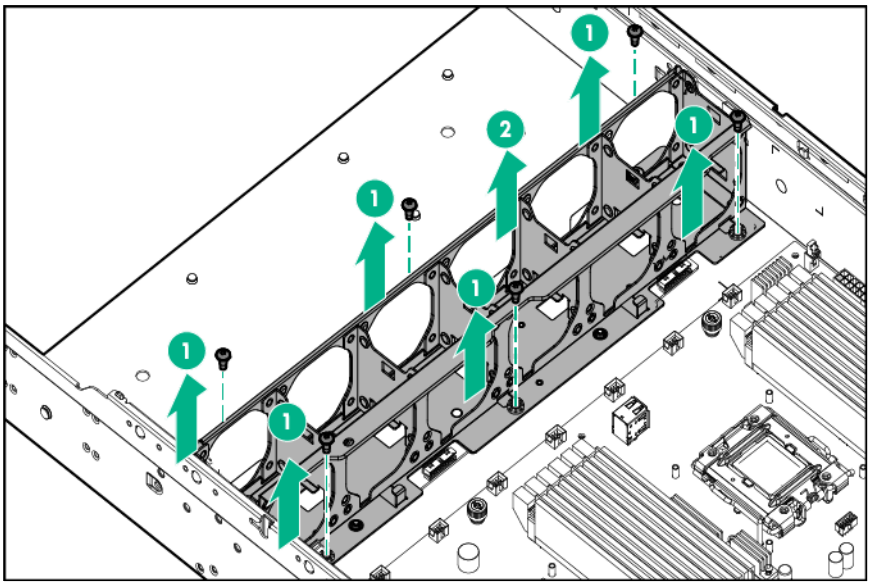

9. Remove the fan board ("Fan board" on page 47).

To replace the component, reverse the removal procedure.

Fan board

To remove the component:

1. Power down the server (on page 30).
2. Remove all power:
   a. Disconnect each power cord from the power source.
   b. Disconnect each power cord from the server.
3. Do one of the following:
   - Extend the server from the rack (on page 30).
   - Remove the server from the rack (on page 33).
4. Remove the access panel ("Access panel" on page 36).
5. Remove the air baffle ("Air baffle" on page 41).
6. Remove the fan cage ("Fan cage" on page 46).

7. Remove the fan board.

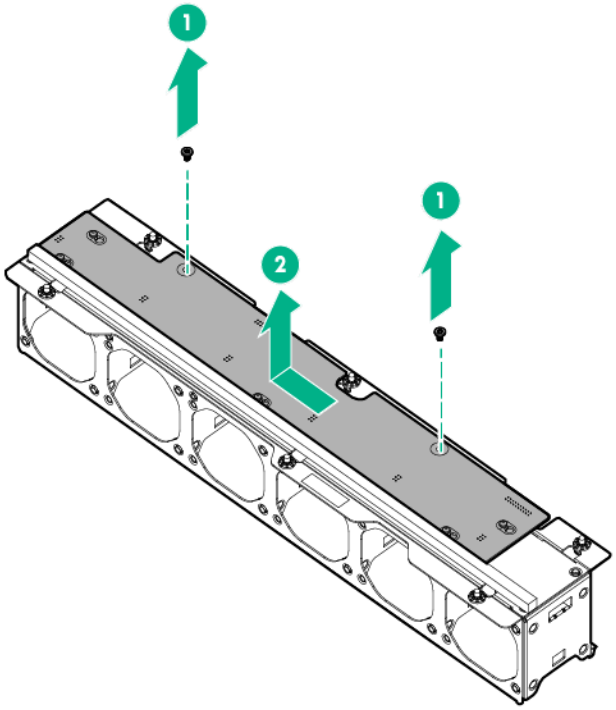

To replace the component, reverse the removal procedure.

DIMMs

To remove the component:

1. Power down the server (on page 30).
2. Remove all power:
   a. Disconnect each power cord from the power source.
   b. Disconnect each power cord from the server.
3. Do one of the following:
   - Extend the server from the rack (on page 30).
   - Remove the server from the rack (on page 33).
4. Remove the access panel ("Access panel" on page 36).
5. Remove the air baffle ("Air baffle" on page 41).
6. Open the DIMM slot latches.

7. Remove the DIMM.

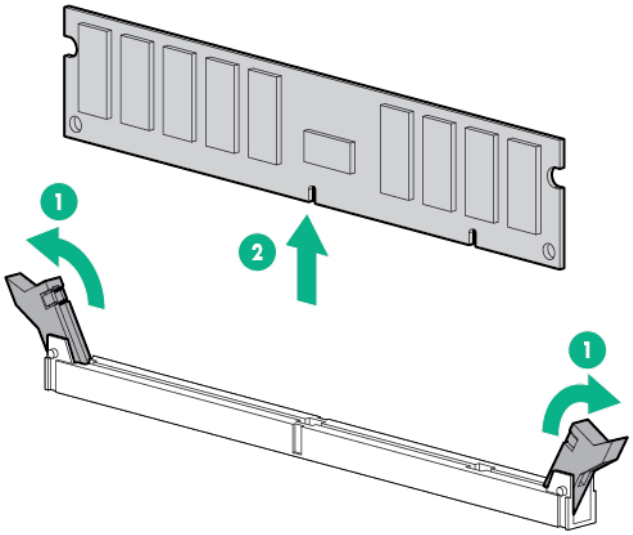

To replace the component, reverse the removal procedure.

Heatsink blank

> △ **CAUTION:** To prevent improper cooling and thermal damage, do not operate the chassis unless all bays are populated with a component or a blank.

To remove the component:

1. Power down the server (on page 30).
2. Remove all power:
   a. Disconnect each power cord from the power source.
   b. Disconnect each power cord from the server.
3. Do one of the following:
   - Extend the server from the rack (on page 30).
   - Remove the server from the rack (on page 33).
4. Remove the access panel ("Access panel" on page 36).

5. Remove the heatsink blank.

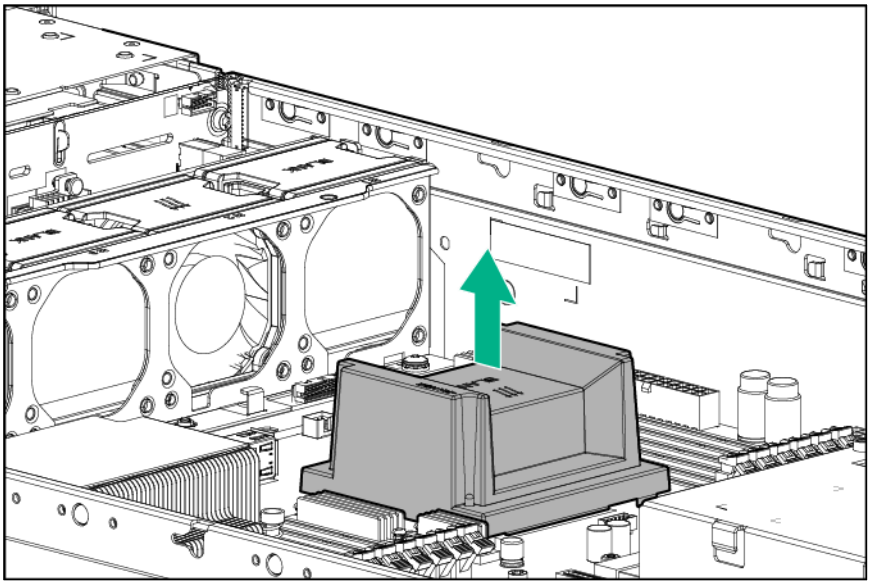

To replace the component, reverse the removal procedure.

Heatsink

To remove the component:

1. Power down the server (on page 30).
2. Remove all power:
   a. Disconnect each power cord from the power source.
   b. Disconnect each power cord from the server.
3. Do one of the following:
   - Extend the server from the rack (on page 30).
   - Remove the server from the rack (on page 33).
4. Remove the access panel ("Access panel" on page 36).
5. Remove the air baffle ("Air baffle" on page 41).
6. Remove the heatsink:
   a. Loosen one pair of diagonally opposite screws halfway, and then loosen the other pair of screws.
   b. Completely loosen all screws in the same sequence.

c. Remove the heatsink from the processor backplate.

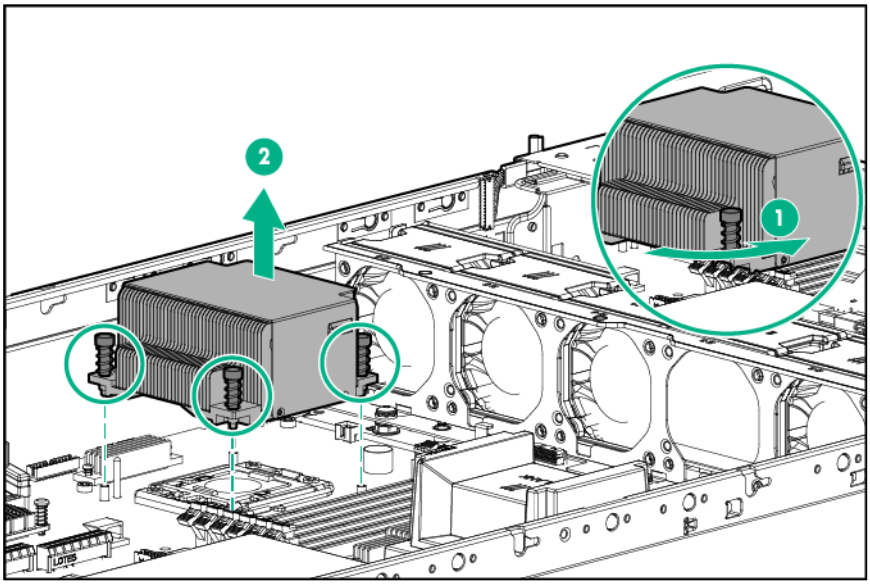

To replace the component:

1. Clean the old thermal grease from the processor with the alcohol swab. Allow the alcohol to evaporate before continuing.
2. Remove the thermal interface protective cover from the heatsink.

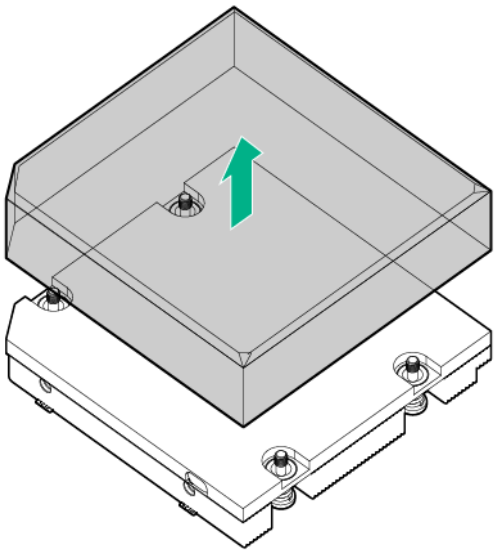

3. Install the heatsink:
   a. Position the heatsink using the guide pin on the processor backplate.
   b. Tighten one pair of diagonally opposite screws halfway, and then tighten the other pair of screws.

c. Finish the installation by completely tightening the screws in the same sequence.

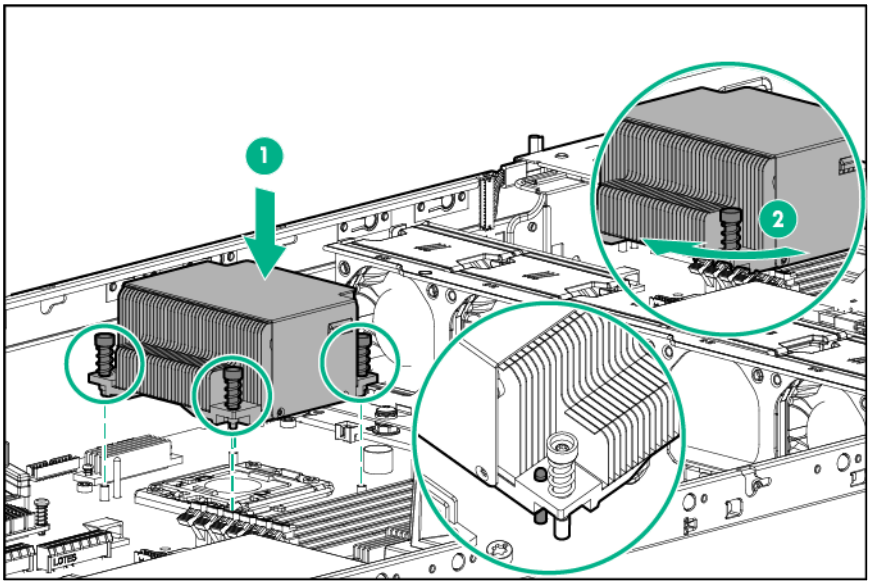

4. Install the air baffle.
5. Install the access panel.
6. Do one of the following:
   - Slide the server into the rack.
   - Install the server into the rack.
7. Connect each power cord to the server.
8. Connect each power cord to the power source.
9. Press the Power On/Standby button.

   The server exits standby mode and applies full power to the system. The system power LED changes from amber to green.

Processor

The server supports single-processor and dual-processor operations.

WARNING: To reduce the risk of personal injury from hot surfaces, allow the drives and the internal system components to cool before touching them.

CAUTION: To avoid damage to the processor and system board, only authorized personnel should attempt to replace or install the processor in this server.

CAUTION: To prevent possible server malfunction and damage to the equipment, multiprocessor configurations must contain processors with the same part number.

CAUTION: To prevent possible server overheating, always populate processor socket 2 with a processor and a heatsink or a processor socket cover and a heatsink blank.

IMPORTANT: If installing a processor with a faster speed, update the system ROM before installing the processor.

IMPORTANT: Processor socket 1 must be populated at all times or the server does not function.

In a multiprocessor configuration, to optimize system performance, Hewlett Packard Enterprise recommends balancing the total capacity of the DIMMs across the processors.

To remove the component:

1. Power down the server (on page 30).
2. Remove all power:
   a. Disconnect each power cord from the power source.
   b. Disconnect each power cord from the server.
3. Do one of the following:
   - Extend the server from the rack (on page 30).
   - Remove the server from the rack (on page 33).
4. Remove the access panel ("Access panel" on page 36).
5. Remove the air baffle ("Air baffle" on page 41).
6. Remove the heatsink ("Heatsink" on page 50, "Processor" on page 52).

CAUTION: The pins on the processor socket are very fragile. Any damage to them may require replacing the system board.

7. Open each of the processor locking levers in the order indicated, and then open the processor retaining bracket.

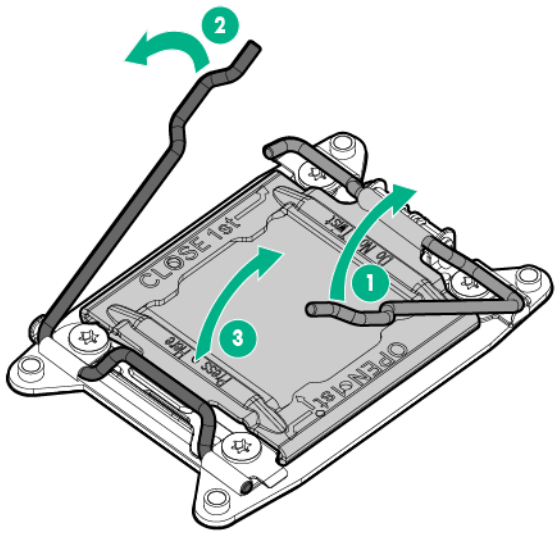

CAUTION: To avoid damage to the processor, do not touch the bottom of the processor, especially the contact area.

8. Remove the processor from the processor retaining bracket.

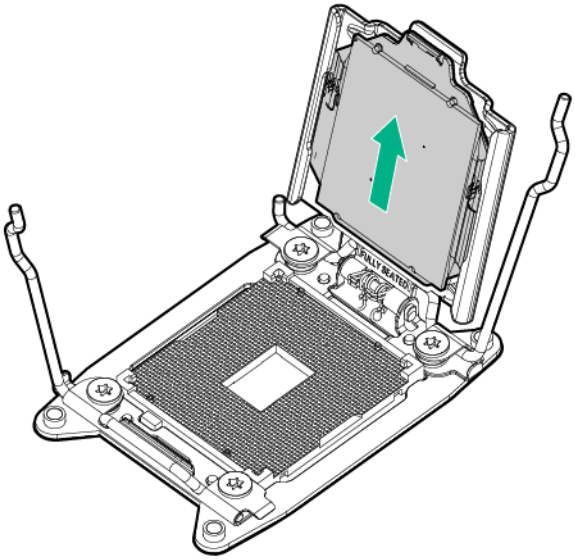

To replace the component:

1. Install the processor. Verify that the processor is fully seated in the processor retaining bracket by visually inspecting the processor installation guides on either side of the processor. **THE PINS ON THE SYSTEM BOARD ARE VERY FRAGILE AND EASILY DAMAGED**.

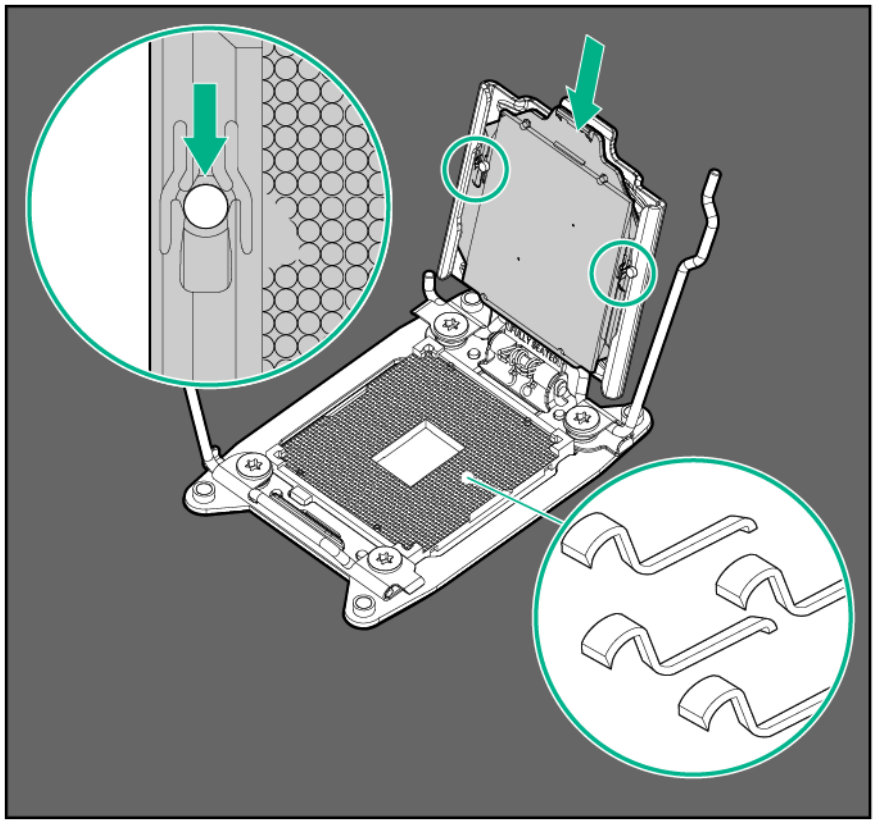

△ **CAUTION: THE PINS ON THE SYSTEM BOARD ARE VERY FRAGILE AND EASILY DAMAGED.** To avoid damage to the system board, do not touch the processor or the processor socket contacts.

2. Close the processor retaining bracket. When the processor is installed properly inside the processor retaining bracket, the processor retaining bracket clears the flange on the front of the socket.

> **CAUTION:** Do not press down on the processor. Pressing down on the processor may cause damage to the processor socket and the system board. Press only in the area indicated on the processor retaining bracket.

3. Press and hold the processor retaining bracket in place, and then close each processor locking lever. Press only in the area indicated on the processor retaining bracket.

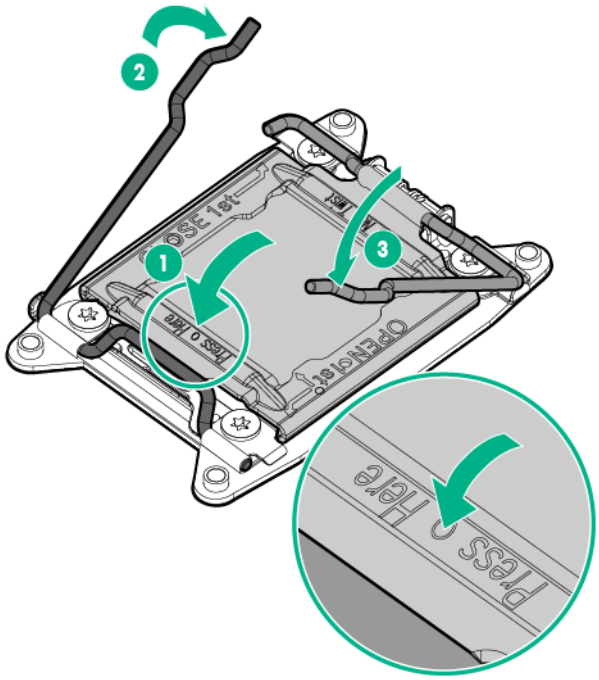

4. Clean the old thermal grease from the heatsink with the alcohol swab. Allow the alcohol to evaporate before continuing.
5. Apply all the grease to the top of the processor in the following pattern to ensure even distribution.

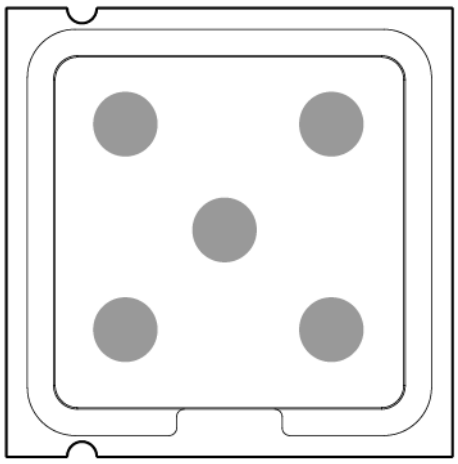

6. Install the heatsink:
   a. Position the heatsink using the guide pin on the processor backplate.
   b. Tighten one pair of diagonally opposite screws halfway, and then tighten the other pair of screws.

c. Finish the installation by completely tightening the screws in the same sequence.

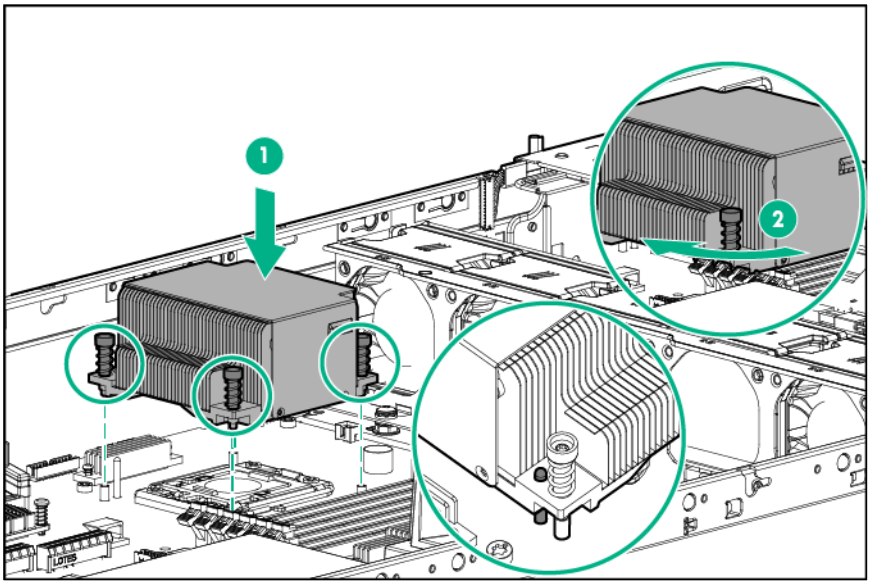

7. Install the air baffle.
8. Install the access panel.
9. Do one of the following:
   - Slide the server into the rack.
   - Install the server into the rack.
10. Connect each power cord to the server.
11. Connect each power cord to the power source.
12. Press the Power On/Standby button.

    The server exits standby mode and applies full power to the system. The system power LED changes from amber to green.

PCI riser cage

To remove the component:

CAUTION: To prevent damage to the server or expansion boards, power down the server, and disconnect all power cords before removing or installing the PCI riser cage.

1. Power down the server (on page 30).
2. Remove all power:
   a. Disconnect each power cord from the power source.
   b. Disconnect each power cord from the server.
3. Do one of the following:
   - Extend the server from the rack (on page 30).
   - Remove the server from the rack (on page 33).
4. Remove the access panel ("Access panel" on page 36).
5. Disconnect all cables connected to the expansion board.
6. Lift the release tabs, and then rotate them 180° counterclockwise.
7. Lift the PCI riser cage to unseat the PCI riser boards.

- Primary PCI riser cage

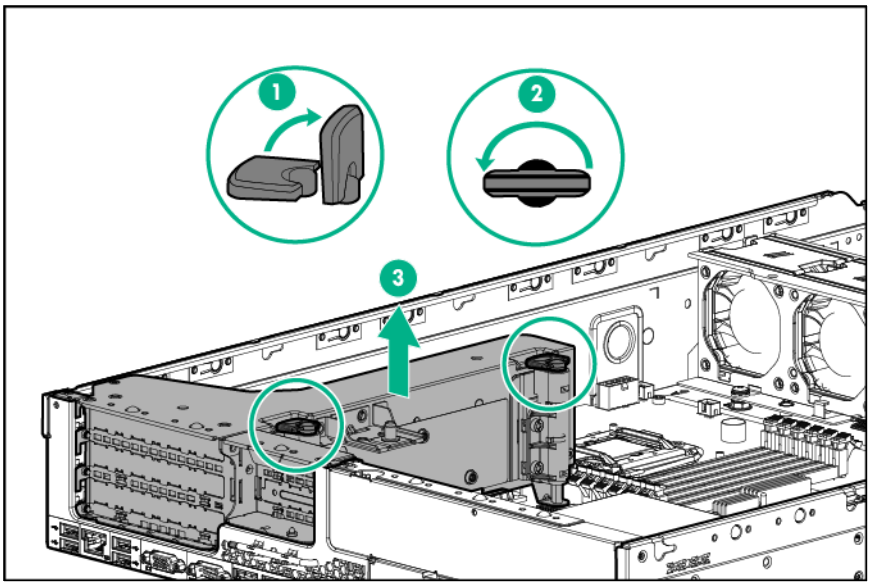

- Secondary PCI riser cage (optional)

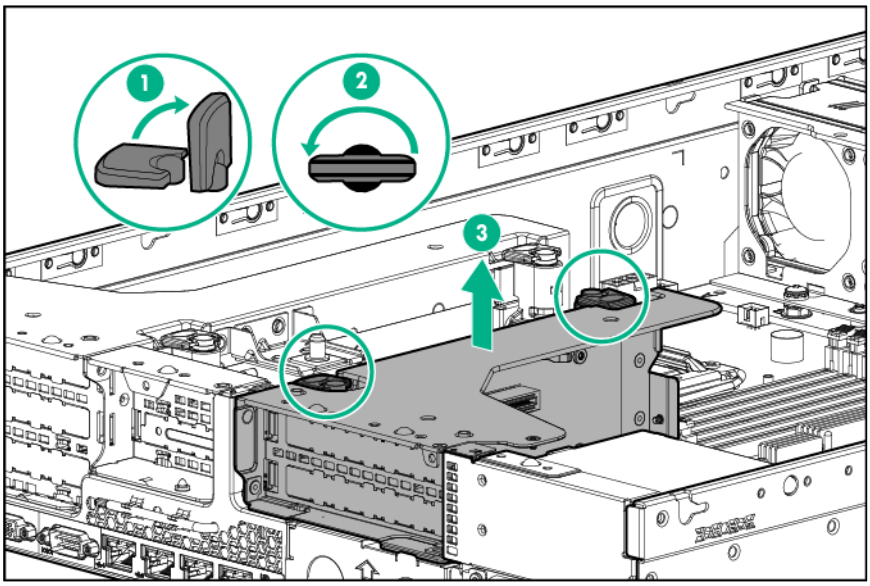

To replace the component, reverse the removal procedure.

GPU retaining bracket

To remove the component:

1. Power down the server (on page 30).
2. Remove all power:
   a. Disconnect each power cord from the power source.
   b. Disconnect each power cord from the server.
3. Do one of the following:
   - Extend the server from the rack (on page 30).
   - Remove the server from the rack (on page 33).

4. Remove the access panel ("Access panel" on page 36).
5. Remove the PCI riser cage ("PCI riser cage" on page 56).
6. Remove the GPU retaining bracket:
   - GPU retaining bracket for the primary PCI riser cage

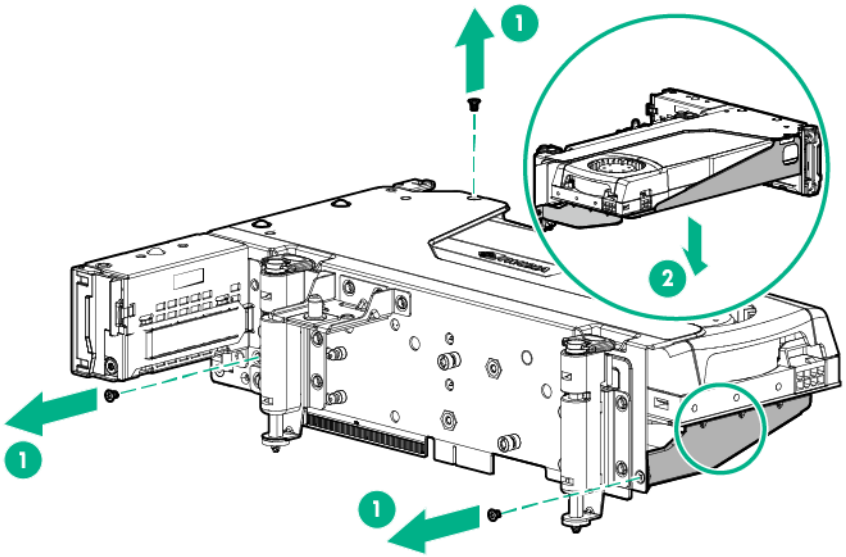

   - GPU retaining bracket for the secondary PCI riser cage

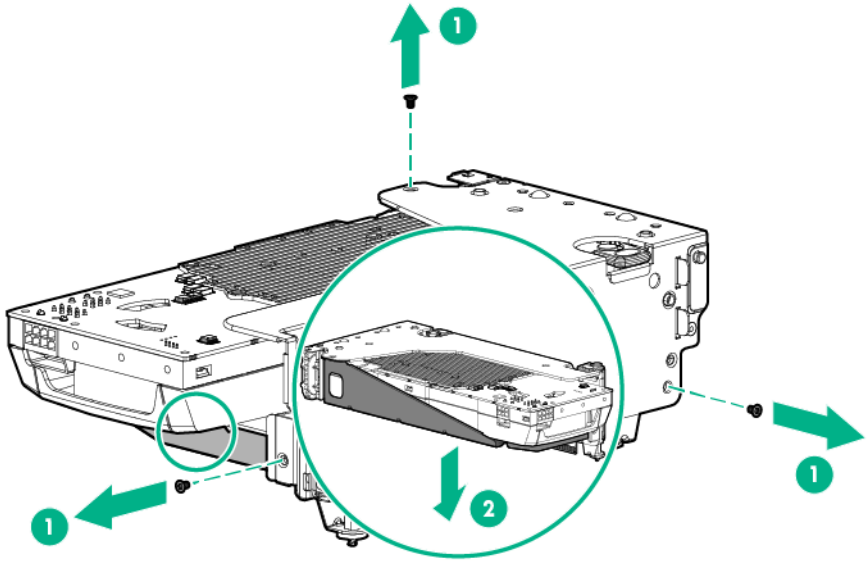

To replace the component, reverse the removal procedure.

Expansion board

To remove the component:

1. Power down the server (on page 30).
2. Remove all power:
   a. Disconnect each power cord from the power source.
   b. Disconnect each power cord from the server.

3. Do one of the following:
   - Extend the server from the rack (on page 30).
   - Remove the server from the rack (on page 33).
4. Remove the access panel ("Access panel" on page 36).
5. Disconnect all cables connected to existing expansion boards.
6. Remove the PCI riser cage ("PCI riser cage" on page 56).
7. Open the expansion slot cover retainer:
   - Primary PCI riser cage

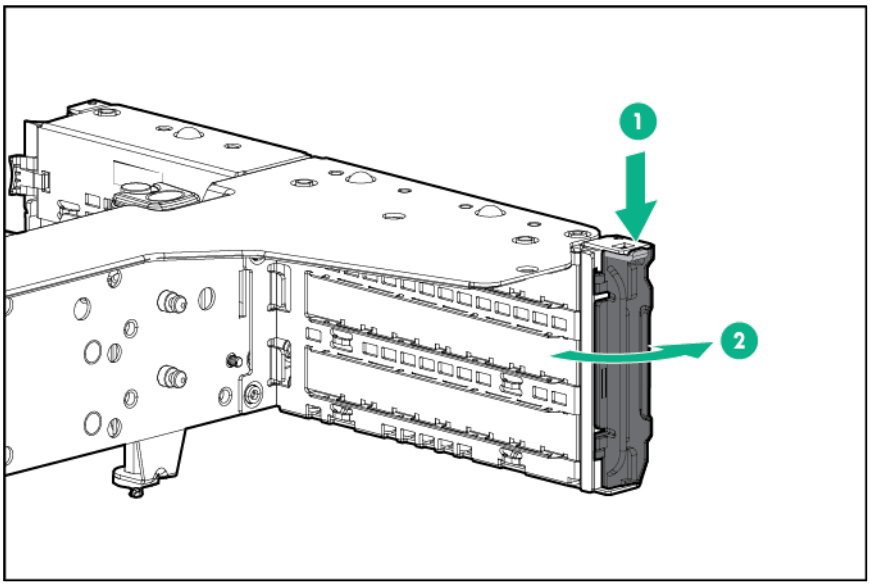

   - Secondary PCI riser cage

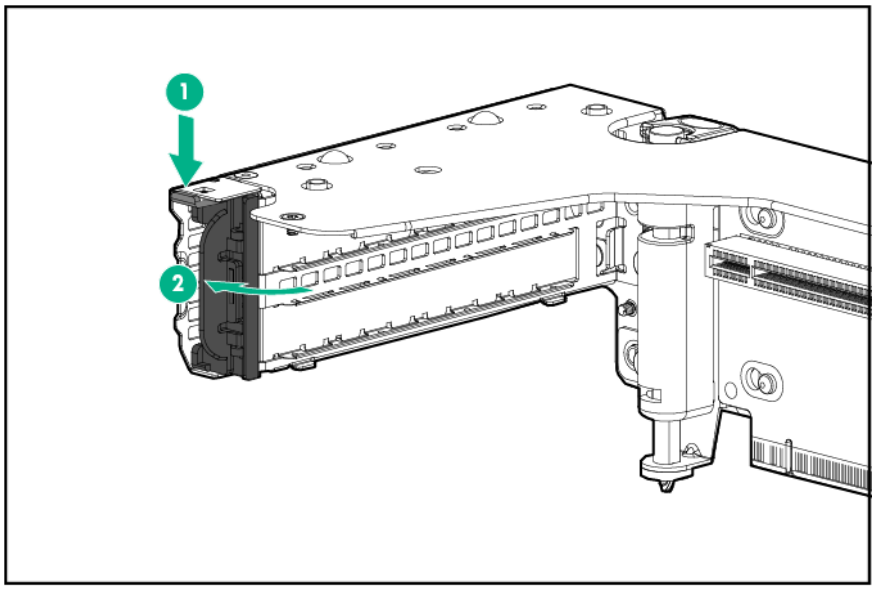

8. Remove the expansion board:

- Expansion board from the primary PCI riser cage

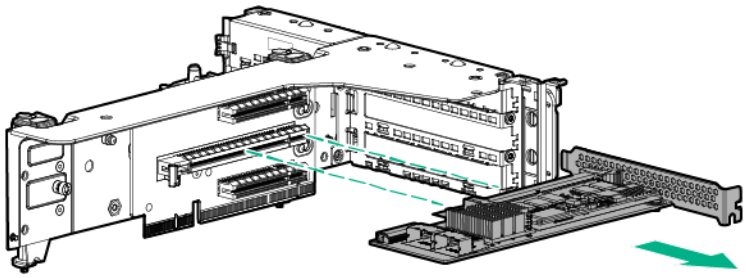

- Expansion board from the secondary PCI riser cage

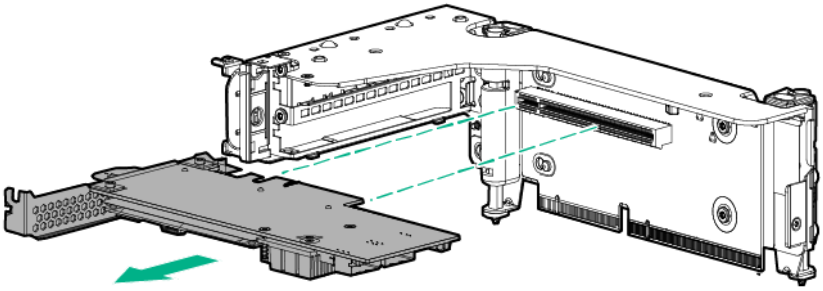

To replace the component, reverse the removal procedure.

PCIe riser board

To remove the component:

1. Power down the server (on page 30).
2. Remove all power:
   a. Disconnect each power cord from the power source.
   b. Disconnect each power cord from the server.
3. Do one of the following:
   - Extend the server from the rack (on page 30).
   - Remove the server from the rack (on page 33).
4. Remove the access panel ("Access panel" on page 36).
5. Disconnect all cables connected to existing expansion boards.
6. Remove the PCI riser cage ("PCI riser cage" on page 56).
7. Remove any existing expansion board from the riser board.

8. Remove the riser board:
   - Full-height riser board

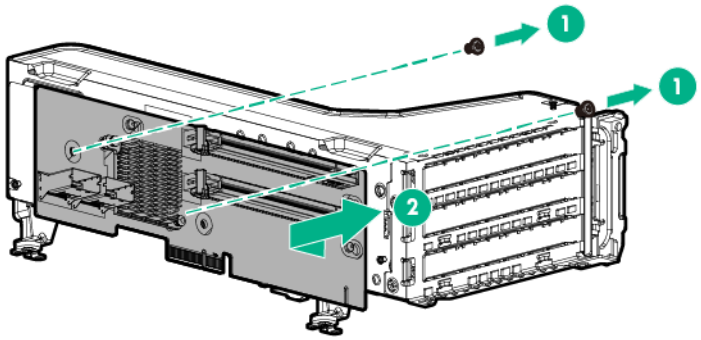

   - Low-profile riser board

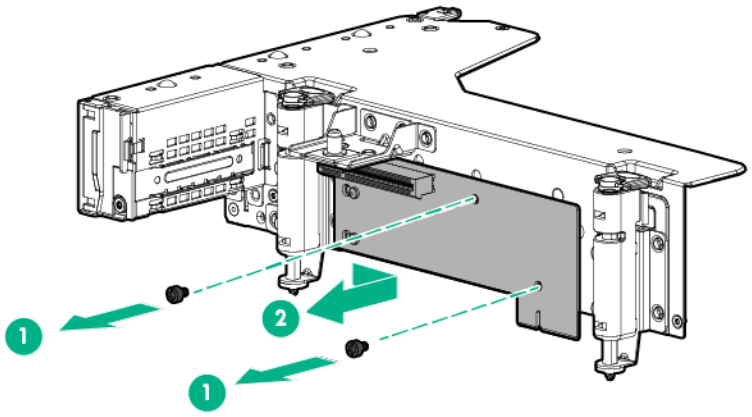

To replace the component, reverse the removal procedure.

PSU air baffle

To remove the component:

1. Power down the server (on page 30).
2. Remove all power:
   a. Disconnect each power cord from the power source.
   b. Disconnect each power cord from the server.
3. Do one of the following:
   - Extend the server from the rack (on page 30).
   - Remove the server from the rack (on page 33).
4. Remove the access panel ("Access panel" on page 36).
5. If necessary, remove rear drive cables that are secured in the PSU air baffle latches.

6. Remove the PSU air baffle.

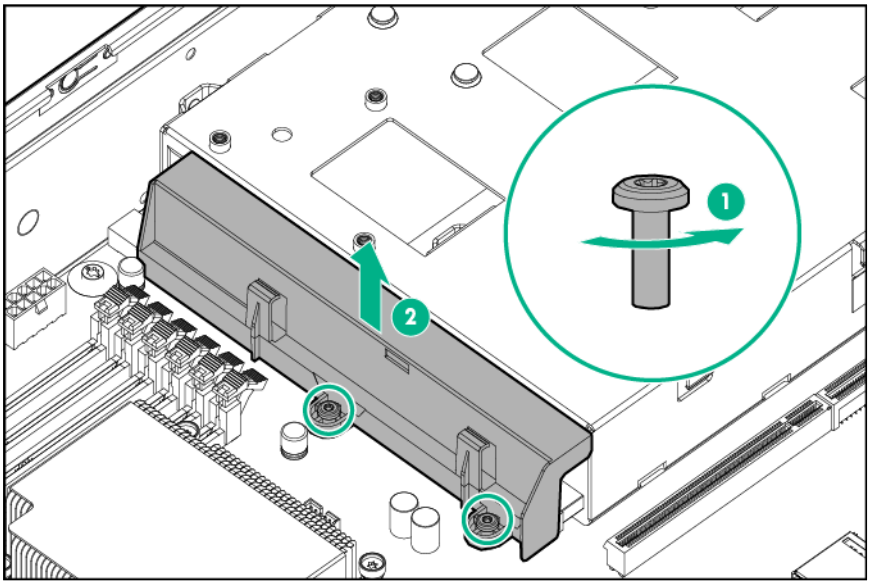

To replace the component, reverse the removal procedure.

Rear drive cage

To remove the component:

1. Power down the server (on page 30).
2. Remove all power:
   a. Disconnect each power cord from the power source.
   b. Disconnect each power cord from the server.
3. Do one of the following:
   - Extend the server from the rack (on page 30).
   - Remove the server from the rack (on page 33).
4. Remove the access panel ("Access panel" on page 36).
5. Remove the rear drives ("Hot-plug drive" on page 34).
6. Disconnect all cables connected to the drive cage backplane.
7. Remove the rear drive cage:

- 2 LFF rear drive cage

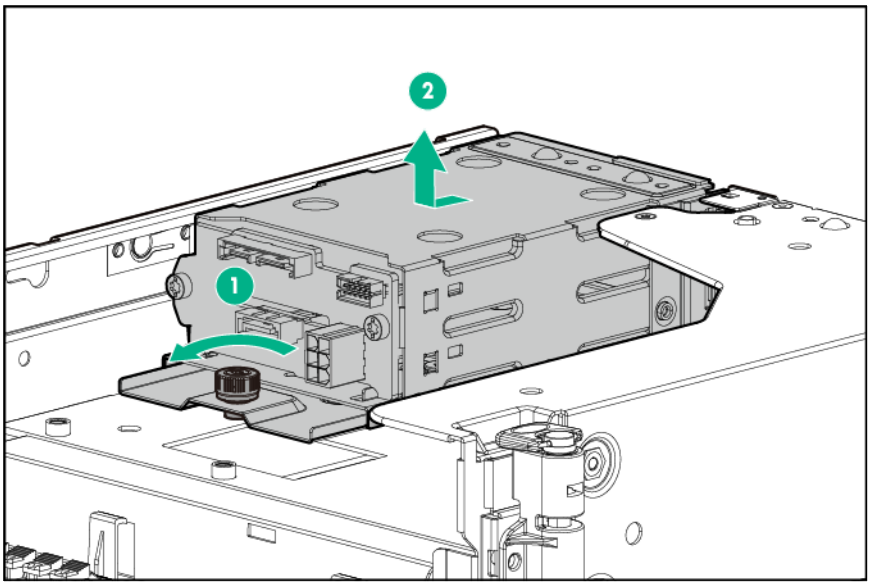

- 2 SFF rear drive cage

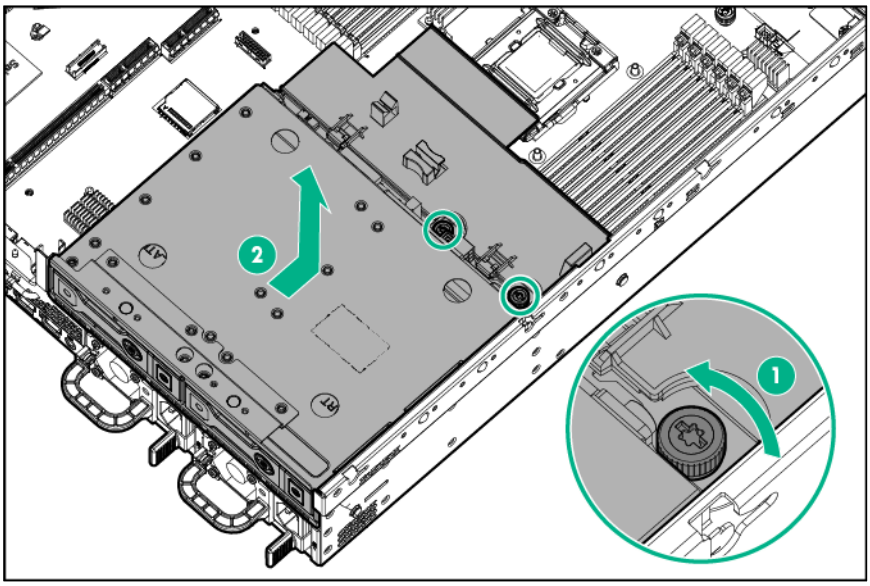

To replace the component, reverse the removal procedure.

If no replacement drive cage is installed, do one of the following:

- Install the secondary PCI riser cage blank.
- Install the LFF rear drive cage blank.

Flash-backed write cache procedures

The following types of procedures are provided for the FBWC option:

- Removal and replacement of failed components:
  - Removing the cache module ("FBWC module" on page 64)
  - Removing the capacitor pack ("Capacitor pack" on page 65)
  - Removing the capacitor pack holder ("Capacitor pack holder" on page 66)

- Recovery of cached data from a failed server ("Recovering data from the flash-backed write cache" on page 67)

CAUTION: Do not detach the cable that connects the battery pack or capacitor pack to the cache module. Detaching the cable causes all data in the cache module to be lost.

FBWC module

CAUTION: The cache module connector does not use the industry-standard DDR3 mini-DIMMs. Do not use the controller with cache modules designed for other controller models, because the controller can malfunction and you can lose data. Also, do not transfer this cache module to an unsupported controller model, because you can lose data.

CAUTION: In systems that use external data storage, be sure that the server is the first unit to be powered down and the last to be powered back up. Taking this precaution ensures that the system does not erroneously mark the drives as failed when the server is powered up.

To remove the component:

1. Power down the server (on page 30).
2. Remove all power:
   a. Disconnect each power cord from the power source.
   b. Disconnect each power cord from the server.
3. Do one of the following:
   - Extend the server from the rack (on page 30).
   - Remove the server from the rack (on page 33).
4. Remove the access panel ("Access panel" on page 36).
5. If the cache module is installed on the system board, remove the PCI riser cage ("PCI riser cage" on page 56).

CAUTION: When connecting or disconnecting the capacitor pack cable, the connectors on the cache module and cable are susceptible to damage. Avoid excessive force and use caution to avoid damage to these connectors.

6. Disconnect the capacitor pack cable from the cache module.

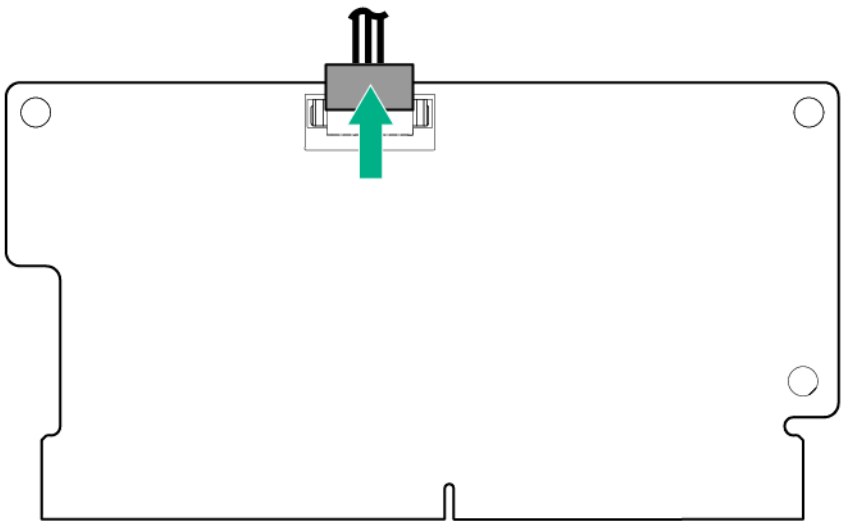

7. Remove the cache module:
   - Cache module on the system board

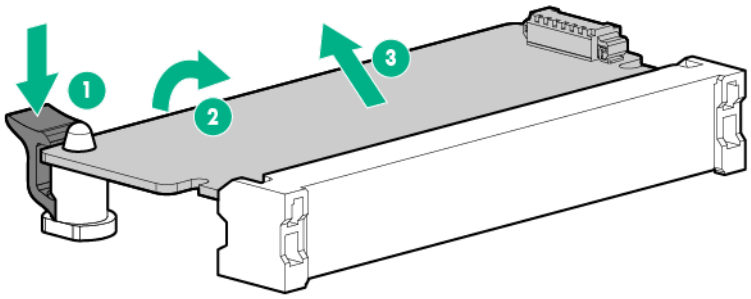

   - Cache module on a storage controller

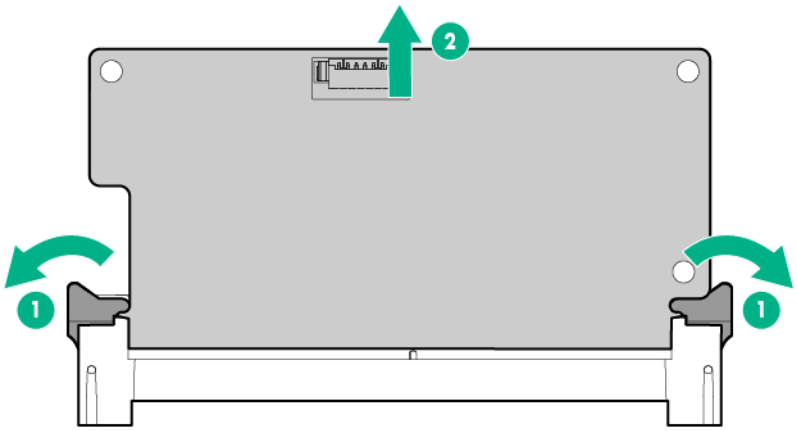

To replace the component, reverse the removal procedure.

CAUTION: To prevent damage to the cache module during installation, be sure the cache module is fully inserted before pressing down.

Capacitor pack

CAUTION: In systems that use external data storage, be sure that the server is the first unit to be powered down and the last to be powered back up. Taking this precaution ensures that the system does not erroneously mark the drives as failed when the server is powered up.

To remove the component:

1. Power down the server (on page 30).
2. Remove all power:
   a. Disconnect each power cord from the power source.
   b. Disconnect each power cord from the server.
3. Do one of the following:
   - Extend the server from the rack (on page 30).
   - Remove the server from the rack (on page 33).
4. Remove the access panel ("Access panel" on page 36).

5. If the cache module is installed in the system board, remove the primary PCI riser cage ("PCI riser cage" on page 56).
6. If the existing cache module is connected to a capacitor pack, observe the FBWC module LEDs:
   - If a backup is in progress, wait for the backup to complete.
   - If the backup is complete, or if the cache has failed, remove the controller from the server, and then continue with the next step.
7. Disconnect the capacitor pack cable from the cache module.

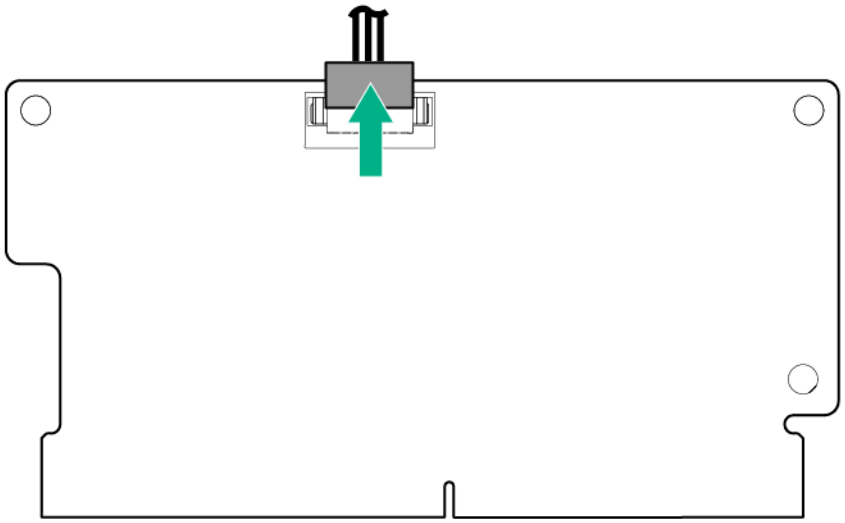

8. Remove the capacitor pack.

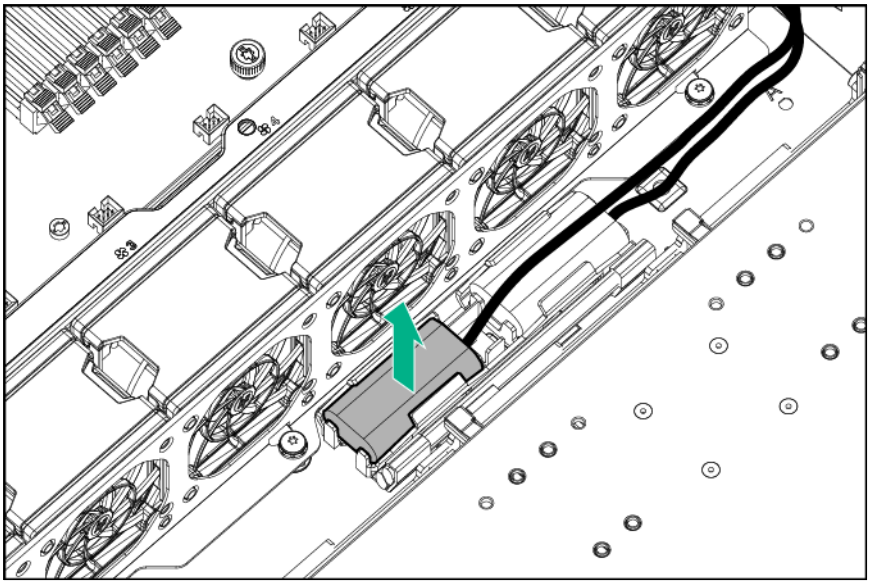

To replace the component, reverse the removal procedure.

Capacitor pack holder

To remove the component:

1. Power down the server (on page 30).
2. Remove all power:

a. Disconnect each power cord from the power source.
b. Disconnect each power cord from the server.

3. Do one of the following:
   - Extend the server from the rack (on page 30).
   - Remove the server from the rack (on page 33).
4. Remove the access panel ("Access panel" on page 36).
5. Remove the capacitor pack.

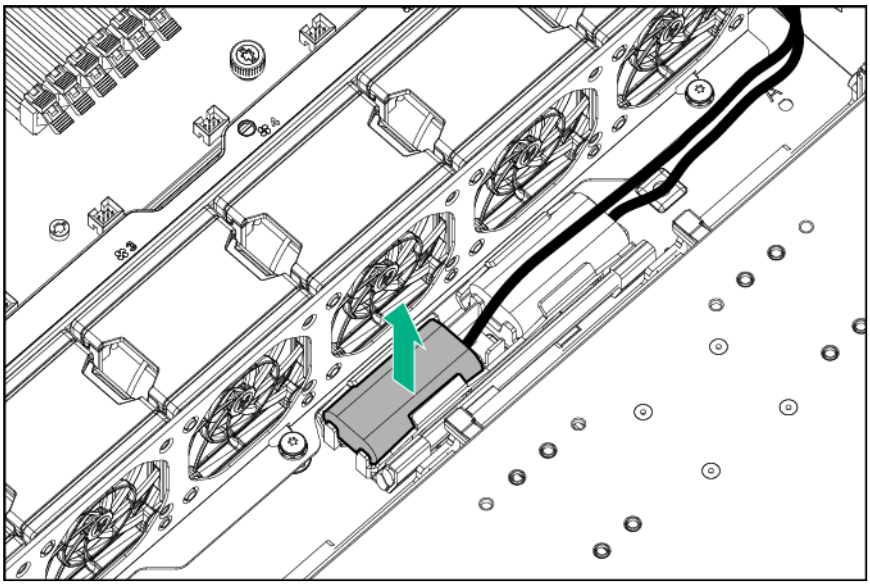

6. Remove the capacitor pack holder.

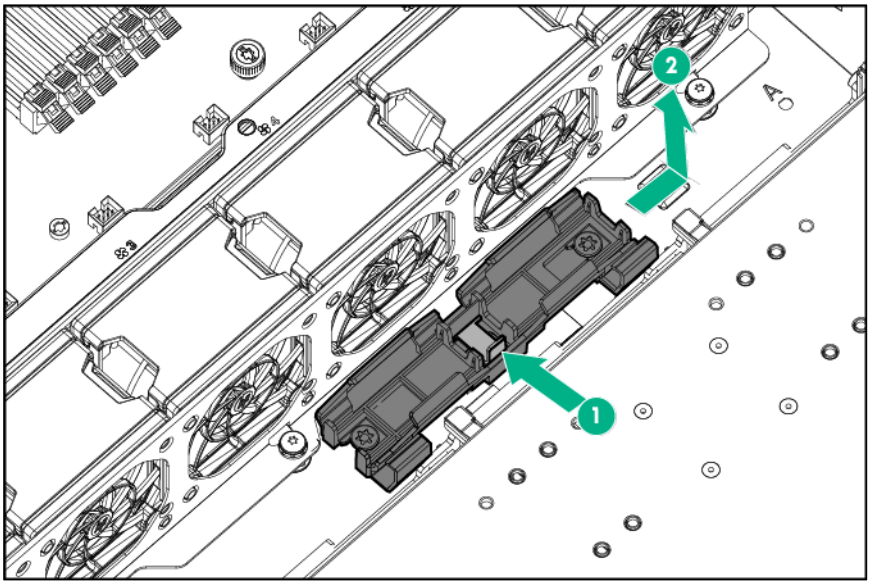

To replace the component, reverse the removal procedure.

Recovering data from the flash-backed write cache

If the server fails, use the following procedure to recover data temporarily stored in the FBWC.

CAUTION: Before starting this procedure, read the information about protecting against electrostatic discharge ("Preventing electrostatic discharge" on page 27).

1. Perform one of the following:
   - Set up a recovery server using an identical server model. Do not install any internal drives or FBWC in this server. (Hewlett Packard Enterprise recommends this option.)
   - Find a server that has enough empty drive bays to accommodate all the drives from the failed server and that meets all the other requirements for drive and array migration.
2. Power down the failed server ("Power down the server" on page 30).
3. Transfer the drives from the failed server to the recovery server.
4. Perform one of the following:
   - If the array controller has failed, remove the cache module and capacitor pack from the failed array controller, and install the cache module and capacitor pack on an identical array controller model in the recovery server.
   - If the server has failed, remove the controller, cache module, and capacitor pack from the failed server, and install the controller, cache module, and capacitor pack in the recovery server.
5. Power up the recovery server. If there was data in the cache at the time of the controller or server failure, a 1792 POST message appears, stating that valid data was flushed from the cache. This data is now stored on the drives in the recovery server. You can now transfer the drives (and controller, if one is used) to another server.

   If the drives are migrated to different drive positions or there are volumes present in the recovery server, a 1724 POST message appears, stating that logical drive configuration has been updated automatically.

System battery

If the server no longer automatically displays the correct date and time, then replace the battery that provides power to the real-time clock. Under normal use, battery life is 5 to 10 years.

WARNING: The computer contains an internal lithium manganese dioxide, a vanadium pentoxide, or an alkaline battery pack. A risk of fire and burns exists if the battery pack is not properly handled. To reduce the risk of personal injury:

- Do not attempt to recharge the battery.
- Do not expose the battery to temperatures higher than 60°C (140°F).
- Do not disassemble, crush, puncture, short external contacts, or dispose of in fire or water.
- Replace only with the spare designated for this product.

To remove the component:

1. Power down the server (on page 30).
2. Remove all power:
   a. Disconnect each power cord from the power source.
   b. Disconnect each power cord from the server.
3. Do one of the following:
   - Extend the server from the rack (on page 30).
   - Remove the server from the rack (on page 33).
4. Remove the access panel ("Access panel" on page 36).
5. Locate the battery on the system board ("System board components" on page 91).

6. Remove the battery.

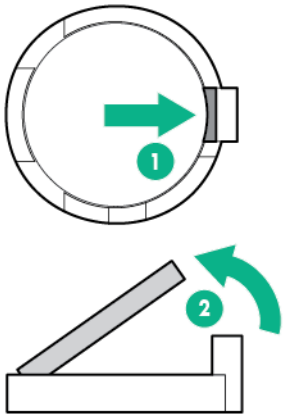

IMPORTANT: Replacing the system board battery resets the system ROM to its default configuration. After replacing the battery, reconfigure the system through RBSU.

To replace the component, reverse the removal procedure.

For more information about battery replacement or proper disposal, contact an authorized reseller or an authorized service provider.

System board assembly procedures

The following procedures are required when replacing the system board:

- Install the spare system board (on page 69).
- Re-enter the server serial number and the product ID ("Re-entering the server serial number and product ID" on page 75, http://www.).
- Reactivate the HPE Smart Array SAS license key (on page 76).

Install the spare system board

CAUTION: To avoid ESD damage, when removing electrostatic-sensitive components from the failed system board, place the components on a static-dissipating work surface or inside separate antistatic bags.

To remove the system board assembly:

1. Power down the server (on page 30).
2. Remove all power:
   a. Disconnect each power cord from the power source.
   b. Disconnect each power cord from the server.
3. Remove all power supplies ("Power supply" on page 35).
4. Do one of the following:
   - Extend the server from the rack (on page 30).
   - Remove the server from the rack (on page 33).
5. Remove the access panel ("Access panel" on page 36).
6. Remove the air baffle ("Air baffle" on page 41).

7. Remove the PCI riser cages ("PCI riser cage" on page 56).
8. Disconnect all cables connected to the system board.
9. Remove all DIMMs ("DIMMs" on page 48, "Heatsink blank" on page 49, "Heatsink" on page 50).
10. If installed, remove the heatsink blank ("Heatsink blank" on page 49).
11. Remove the heatsink:
    a. Loosen one pair of diagonally opposite screws halfway, and then loosen the other pair of screws.
    b. Completely loosen all screws in the same sequence.
    c. Remove the heatsink from the processor backplate.

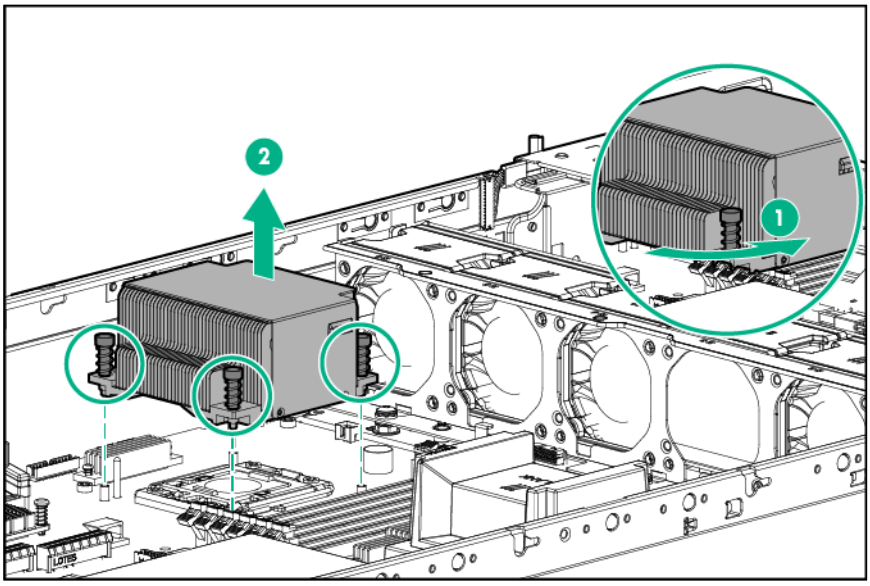

12. Open each of the processor locking levers in the order indicated, and then open the processor retaining bracket.

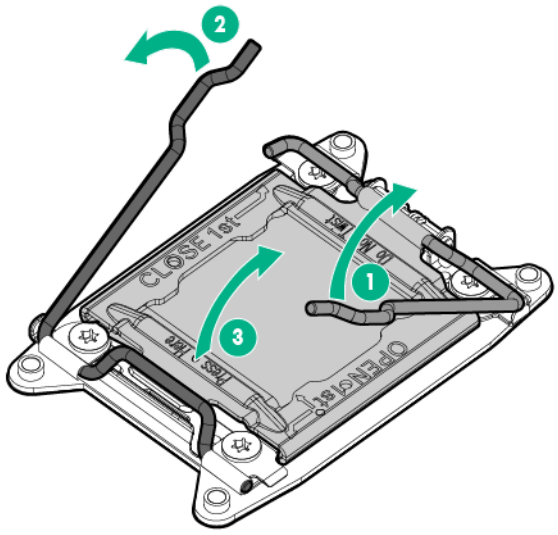

△ **CAUTION:** To avoid damage to the processor, do not touch the bottom of the processor, especially the contact area.

13. Remove the processor from the processor retaining bracket.

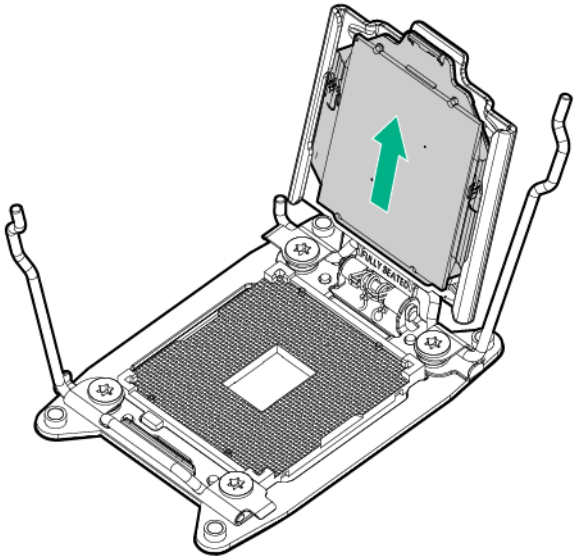

CAUTION: When returning a damaged system board to Hewlett Packard Enterprise, always install all processor socket covers to prevent damage to the processor sockets and system board

14. If the FBWC module is installed on the system board, remove the FBWC module ("FBWC module" on page 64).
15. Remove the system board assembly:
    a. Loosen the system board thumbscrews.
    b. Use the tray handles to lift the system board out of the chassis.

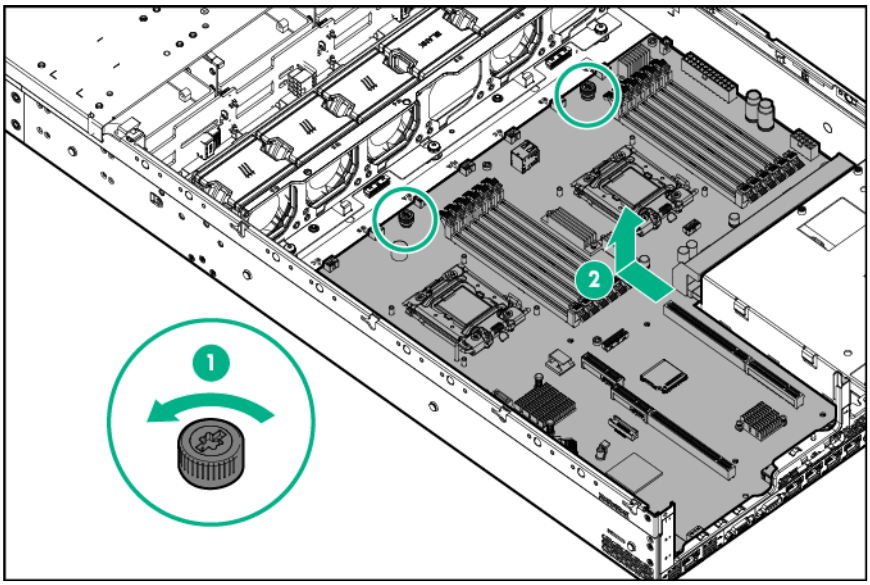

To replace the system board assembly:

1. Install the system board assembly.

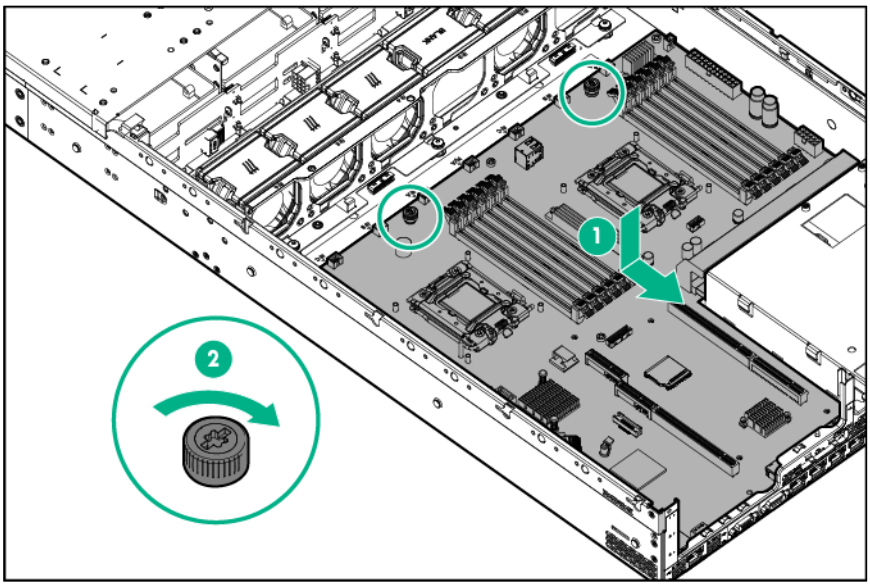

2. Open each of the processor locking levers in the order indicated, and then open the processor retaining bracket.

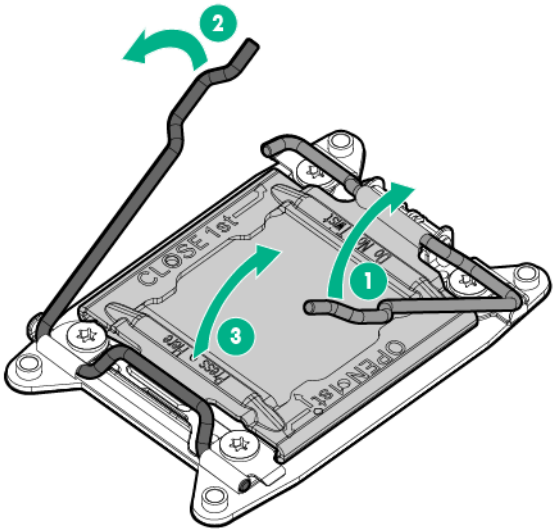

3. Remove the clear processor socket cover. Retain the processor socket cover for future use.

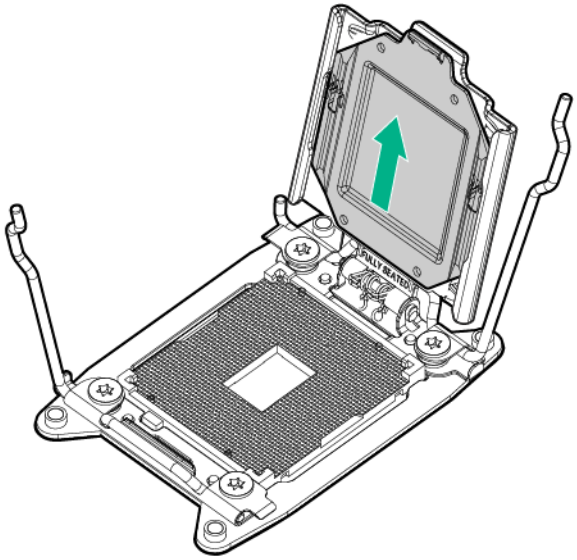

4. Install the processor. Verify that the processor is fully seated in the processor retaining bracket by visually inspecting the processor installation guides on either side of the processor. **THE PINS ON THE SYSTEM BOARD ARE VERY FRAGILE AND EASILY DAMAGED.**

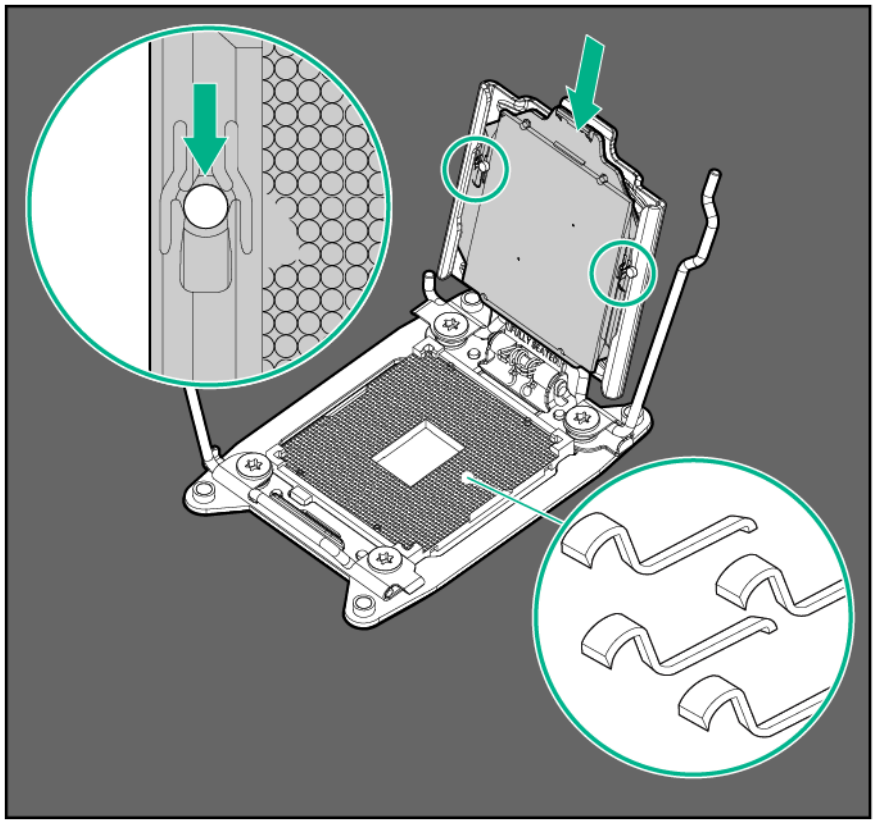

△ **CAUTION: THE PINS ON THE SYSTEM BOARD ARE VERY FRAGILE AND EASILY DAMAGED.** To avoid damage to the system board, do not touch the processor or the processor socket contacts.

5. Close the processor retaining bracket. When the processor is installed properly inside the processor retaining bracket, the processor retaining bracket clears the flange on the front of the socket.

CAUTION: Do not press down on the processor. Pressing down on the processor may cause damage to the processor socket and the system board. Press only in the area indicated on the processor retaining bracket.

6. Press and hold the processor retaining bracket in place, and then close each processor locking lever. Press only in the area indicated on the processor retaining bracket.

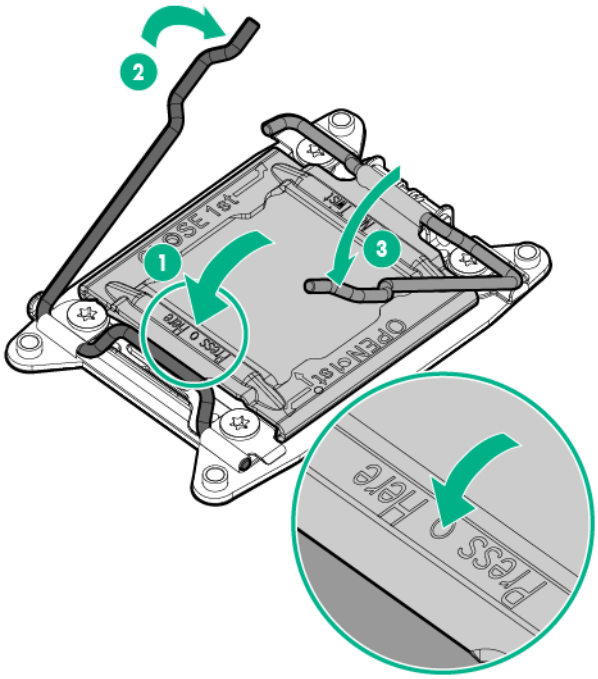

7. Install the processor socket cover onto the processor socket of the failed system board.
8. Clean the old thermal grease from the heatsink and the top of the processor with the alcohol swab. Allow the alcohol to evaporate before continuing.
9. Apply all the grease to the top of the processor in the following pattern to ensure even distribution.

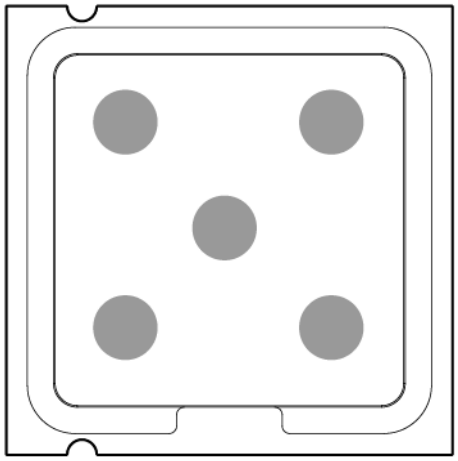

10. Install the heatsink:
    a. Position the heatsink using the guide pin on the processor backplate.
    b. Tighten one pair of diagonally opposite screws halfway, and then tighten the other pair of screws.

c. Finish the installation by completely tightening the screws in the same sequence.

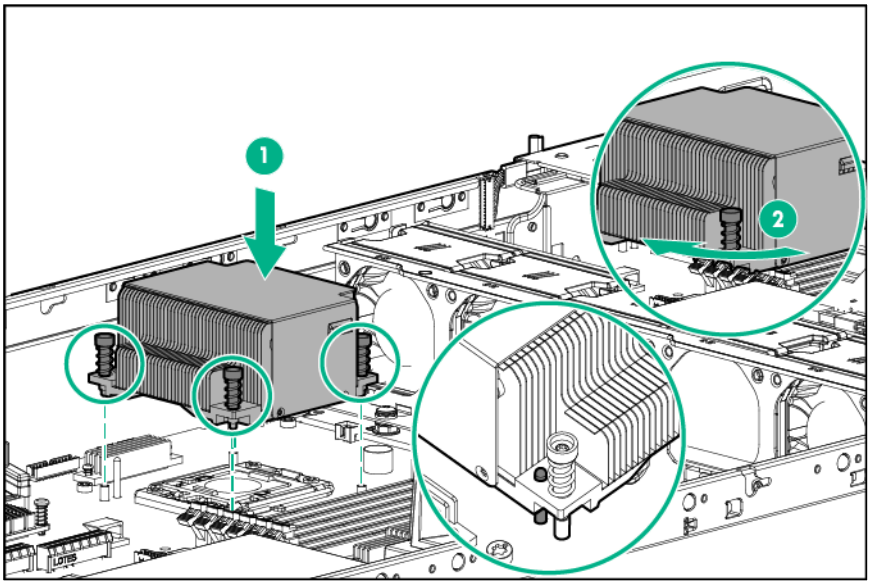

11. Install all components removed from the failed system board.
12. Connect all cables disconnected from the failed system board.
13. Install the PCI riser cages.
14. Install the air baffle.
15. Install the access panel.
16. Do one of the following:
    - Slide the server into the rack.
    - Install the server into the rack.
17. Install the power supplies.
18. Connect each power cord to the server.
19. Connect each power cord to the power source.
20. Press the Power On/Standby button.

    The server exits standby mode and applies full power to the system. The system power LED changes from amber to green.

IMPORTANT: Install all components with the same configuration that was used on the failed system board.

Re-entering the server serial number and product ID

After you replace the system board, you must re-enter the server serial number and the product ID.

1. During the server startup sequence, press the **F9** key to access RBSU.
2. Select the **Advanced Options** menu.
3. Select **Service Options**.
4. Select **Serial Number**. The following warning appears:

   ```
   Warning: The serial number should ONLY be modified by qualified service
   personnel. This value should always match the serial number located on the
   chassis.
   ```
5. Press the **Enter** key to clear the warning.

6. Enter the serial number and press the **Enter** key.
7. Select **Product ID**. The following warning appears:

   ```
   Warning: The Product ID should ONLY be modified by qualified service
   personnel. This value should always match the Product ID located on the
   chassis.
   ```
8. Enter the product ID and press the **Enter** key.
9. Press the **Esc** key to close the menu.
10. Press the **Esc** key to exit RBSU.
11. Press the **F10** key to confirm exiting RBSU. The server automatically reboots.

Reactivate the HPE Smart Array SAS license key

The boot order settings, firmware versions, and any additional Hewlett Packard Enterprise software, including the Smart Array SAS license key, are stored in the system board. Transfer this information to the new system board to ensure normal server operation when the system board is replaced.

SAS license key reactivation is only required for the HPE Dynamic Smart Array B320i Controller. SAS functionality is automatically enabled in other HPE Smart Array controller board options. To activate the SAS license key, use HPE Smart Storage Administrator.

You can access the HPE SSA during POST or by using HPE Intelligent Provisioning.

To launch HPE SSA during POST:

1. Boot the server.

   During POST, the system recognizes devices.
2. When the system recognizes a Smart Array controller, press **F5**.

   The system launches the HPE SSA GUI, or if you are using Serial Console, the system launches the HPE SSA CLI.

To launch HPE SSA using Intelligent Provisioning:

1. Boot the server.
2. Press **F10** to launch Intelligent Provisioning.
3. At the main screen, select **Perform Maintenance**.
4. At the **Maintenance** screen, select **HPE Smart Storage Administrator (SSA)**.

   The system launches the HPE SSA GUI.

To activate the HPE Smart Array SAS license key:

1. Launch the HPE SSA GUI.
2. Open the **Configure** panel by doing one of the following:
   - Choose a device and click **Configure** in the quick navigation menu.
   - Select an available device from the **Home** screen, and then click **Configure** under the available options.
3. In the **Tools** menu, click **License Manager**.

4. Under actions, click **Add License Key**.

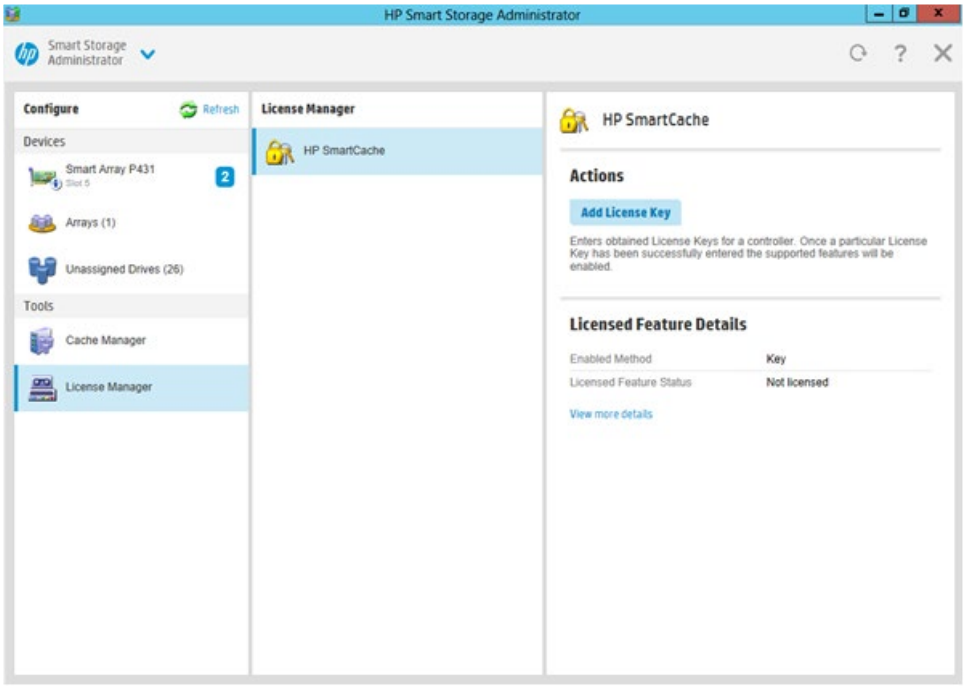

5. Enter the license key number.
6. Click **Save**.
7. Reboot the server.

Secondary PCI riser cage blank

To remove the component:

1. Power down the server (on page 30).
2. Remove all power:
   a. Disconnect each power cord from the power source.
   b. Disconnect each power cord from the server.
3. Do one of the following:
   - Extend the server from the rack (on page 30).
   - Remove the server from the rack (on page 33).
4. Remove the access panel ("Access panel" on page 36).

5. Remove the secondary PCI riser cage blank.

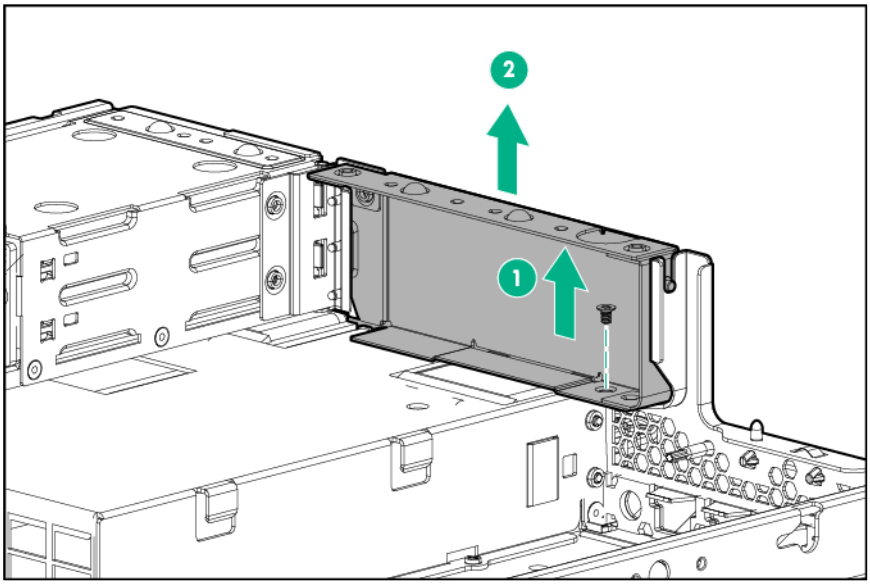

To replace the component, reverse the removal procedure.

LFF rear drive cage blank

To remove the component:

1. Power down the server (on page 30).
2. Remove all power:
   a. Disconnect each power cord from the power source.
   b. Disconnect each power cord from the server.
3. Do one of the following:
   - Extend the server from the rack (on page 30).
   - Remove the server from the rack (on page 33).
4. Remove the access panel ("Access panel" on page 36).

5. Remove the LFF rear drive cage blank.

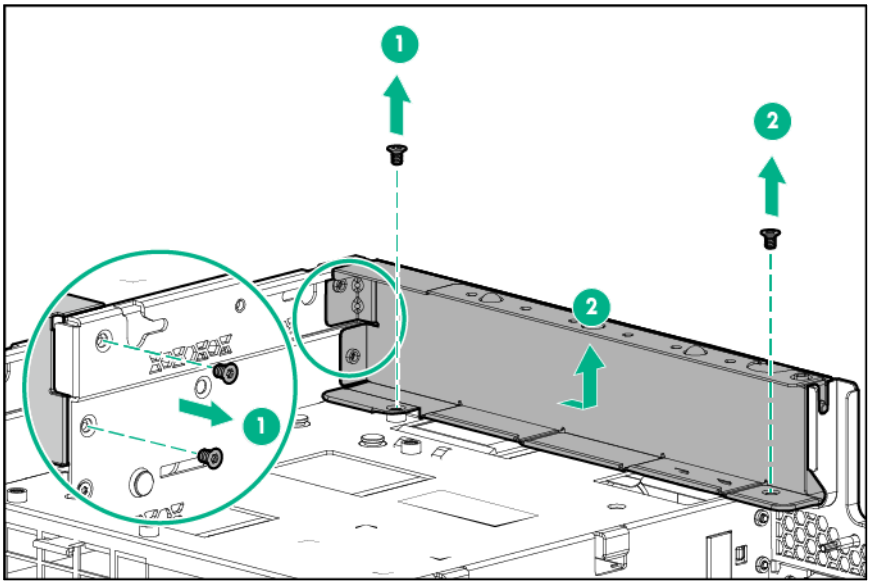

To replace the component, reverse the removal procedure.

HP Trusted Platform Module

The TPM is not a customer-removable part.

> △ **CAUTION:** Any attempt to remove an installed TPM from the system board breaks or disfigures the TPM security rivet. Upon locating a broken or disfigured rivet on an installed TPM, administrators should consider the system compromised and take appropriate measures to ensure the integrity of the system data.

If you suspect a TPM board failure, leave the TPM installed and remove the system board. Contact a Hewlett Packard Enterprise authorized service provider for a replacement system board and TPM board.

Troubleshooting

Troubleshooting resources

The *ProLiant Gen8 Troubleshooting Guide, Volume I: Troubleshooting* provides procedures for resolving common problems and comprehensive courses of action for fault isolation and identification, issue resolution, and software maintenance on ProLiant servers and server blades. To view the guide, select a language:

- English (http://www.hpe.com/support/Gen9_TSG_en)
- French (http://www.hpe.com/support/Gen9_TSG_fr)
- Spanish (http://www.hpe.com/support/Gen9_TSG_es)
- German (http://www.hpe.com/support/Gen9_TSG_de)
- Japanese (http://www.hpe.com/support/Gen9_TSG_ja)
- Simplified Chinese (http://www.hpe.com/support/Gen9_TSG_zh_cn)

The *ProLiant Gen8 Troubleshooting Guide, Volume II: Error Messages* provides a list of error messages and information to assist with interpreting and resolving error messages on ProLiant servers and server blades. To view the guide, select a language:

- English (http://www.hpe.com/support/Gen9_EMG_en)
- French (http://www.hpe.com/support/Gen9_EMG_fr)
- Spanish (http://www.hpe.com/support/Gen9_EMG_es)
- German (http://www.hpe.com/support/Gen9_EMG_de)
- Japanese (http://www.hpe.com/support/Gen9_EMG_ja)
- Simplified Chinese (http://www.hpe.com/support/Gen9_EMG_zh_cn)

Diagnostic tools

Hewlett Packard Enterprise product QuickSpecs

For more information about product features, specifications, options, configurations, and compatibility, see the product QuickSpecs on the Hewlett Packard Enterprise website (http://www.hpe.com/info/qs).

HPE Insight Diagnostics

The Insight Diagnostics is a proactive server management tool, available in both offline and online versions, that provides diagnostics and troubleshooting capabilities to assist IT administrators who verify server installations, troubleshoot problems, and perform repair validation.

The Insight Diagnostics Offline Edition performs various in-depth system and component testing while the OS is not running. To run this utility, boot the server using Intelligent Provisioning.

The Insight Diagnostics Online Edition is a web-based application that captures system configuration and other related data needed for effective server management. Available in Microsoft Windows and Linux versions, the utility helps to ensure proper system operation.

For more information or to download the utility, see the Hewlett Packard Enterprise website (http://www.hpe.com/servers/diags).The Insight Diagnostics Online Edition is also available in the SPP.

HPE Insight Diagnostics survey functionality

HPE Insight Diagnostics (on page 81) provides survey functionality that gathers critical hardware and software information on ProLiant servers.

This functionality supports operating systems that are supported by the server. For operating systems supported by the server, see the Hewlett Packard Enterprise website (http://www.hpe.com/info/supportos).

If a significant change occurs between data-gathering intervals, the survey function marks the previous information and overwrites the survey data files to reflect the latest changes in the configuration.

Survey functionality is installed with every Intelligent Provisioning-assisted Insight Diagnostics installation, or it can be installed through the SPP.

HPE Insight Remote Support

Hewlett Packard Enterprise strongly recommends that you register your device for remote support to enable enhanced delivery of your Hewlett Packard Enterprise warranty, HP Care Pack Service, or Hewlett Packard Enterprise contractual support agreement. Insight Remote Support supplements your monitoring continuously to ensure maximum system availability by providing intelligent event diagnosis, and automatic, secure submission of hardware event notifications to Hewlett Packard Enterprise, which will initiate a fast and accurate resolution, based on your product's service level. Notifications can be sent to your authorized Hewlett Packard Enterprise Channel Partner for onsite service, if configured and available in your country.

For more information, see *Insight Remote Support and Insight Online Setup Guide for ProLiant Servers and BladeSystem c-Class Enclosures* on the Hewlett Packard Enterprise website (http://www.hpe.com/info/insightremotesupport/docs). Insight Remote Support is available as part of Hewlett Packard Enterprise Warranty, HP Care Pack Service, or Hewlett Packard Enterprise contractual support agreement.

HPE ROM-Based Setup Utility

RBSU is a configuration utility embedded in HPE ProLiant servers that performs a wide range of configuration activities that can include the following:

- Configuring system devices and installed options
- Enabling and disabling system features
- Displaying system information
- Selecting the primary boot controller
- Configuring memory options
- Language selection

For more information on RBSU, see the *ROM-Based Setup Utility User Guide* on the Documentation CD or the RBSU Information Library (http://www.hpe.com/info/rbsu/docs).

Integrated Management Log

The IML records hundreds of events and stores them in an easy-to-view form. The IML timestamps each event with 1-minute granularity.

You can view recorded events in the IML in several ways, including the following:

- From within HPE SIM
- From within operating system-specific IML viewers:
  - For Windows: IML Viewer
  - For Linux: IML Viewer Application
- From within the iLO 4 web interface
- From within Insight Diagnostics ("HPE Insight Diagnostics" on page 81)

USB support and functionality

USB support

Hewlett Packard Enterprise provides both standard USB 2.0 support and legacy USB 2.0 support. Standard support is provided by the OS through the appropriate USB device drivers. Before the OS loads, Hewlett Packard Enterprise provides support for USB devices through legacy USB support, which is enabled by default in the system ROM.

Legacy USB support provides USB functionality in environments where USB support is not available normally. Specifically, Hewlett Packard Enterprise provides legacy USB functionality for the following:

- POST
- RBSU
- Diagnostics
- DOS
- Operating environments which do not provide native USB support

Internal USB functionality

An internal USB connector is available for use with security key devices and USB drive keys. This solution provides for use of a permanent USB key installed in the internal connector, avoiding issues of clearance on the front of the rack and physical access to secure data.

External USB functionality

Hewlett Packard Enterprise provides external USB support to enable local connection of USB devices for server administration, configuration, and diagnostic procedures.

For additional security, external USB functionality can be disabled through RBSU.

Automatic Server Recovery

ASR is a feature that causes the system to restart when a catastrophic operating system error occurs, such as a blue screen, ABEND (does not apply to HPE ProLiant DL980 Servers), or panic. A system fail-safe timer, the ASR timer, starts when the System Management driver, also known as the Health Driver, is loaded. When the operating system is functioning properly, the system periodically resets the timer. However, when the operating system fails, the timer expires and restarts the server.

ASR increases server availability by restarting the server within a specified time after a system hang. At the same time, the SIM console notifies you by sending a message to a designated pager number that ASR has restarted the system. You can disable ASR from the System Management Homepage or through RBSU.

Component identification

Front panel components

- 8-bay SFF drive model

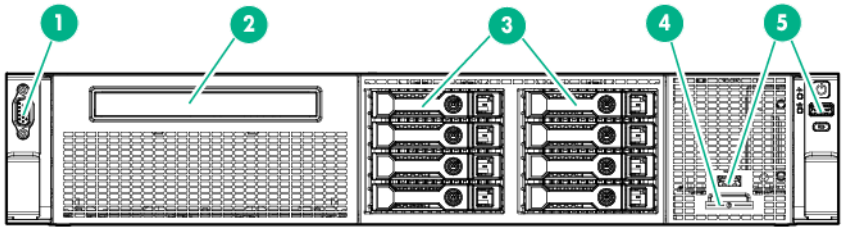

Item	Description
1	Video connector
2	Optical drive (optional)
3	SFF drives
4	Serial number/iLO information pull tab*
5	USB 2.0 connectors

* The serial number/iLO information pull tab is double-sided. The top side shows the server serial number, and the reverse side shows the default iLO account information. The same information is printed on a label attached to the chassis.

- 8-bay LFF drive model

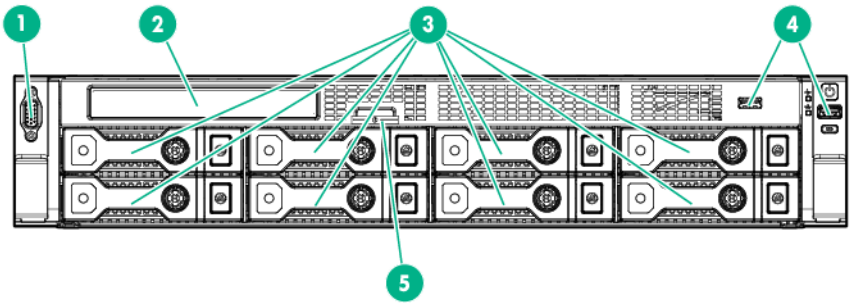

Item	Description
1	Video connector
2	Optical drive (optional)
3	LFF drives
4	USB 2.0 connectors
5	Serial number/iLO information pull tab*

* The serial number/iLO information pull tab is double-sided. The top side shows the server serial number, and the reverse side shows the default iLO account information. The same information is printed on a label attached to the chassis.

- 8+8-bay SFF drive model

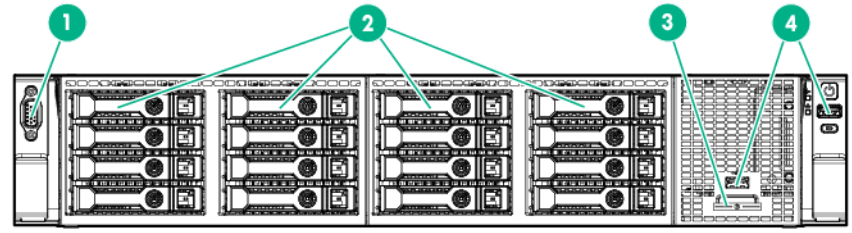

Item	Description
1	Video connector

Item	Description
2	SFF drives
3	Serial number/iLO information pull tab*
4	USB 2.0 connectors

* The serial number/iLO information pull tab is double-sided. The top side shows the server serial number, and the reverse side shows the default iLO account information. The same information is printed on a label attached to the chassis.

- 12-bay LFF drive model

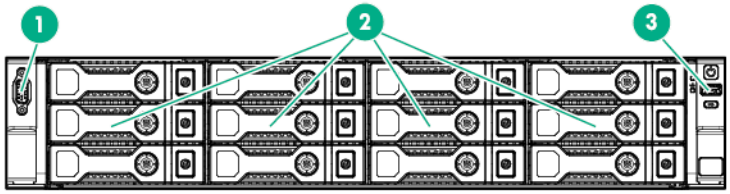

Item	Description
1	Video connector
2	LFF drives
3	USB 2.0 connector

- 25-bay SFF drive model

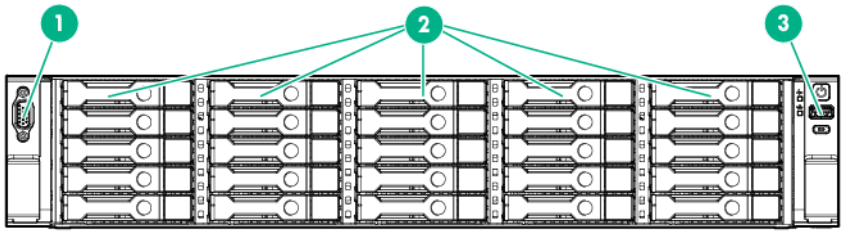

Item	Description
1	Video connector
2	SFF drives
3	USB 2.0 connector

Front panel LEDs and buttons

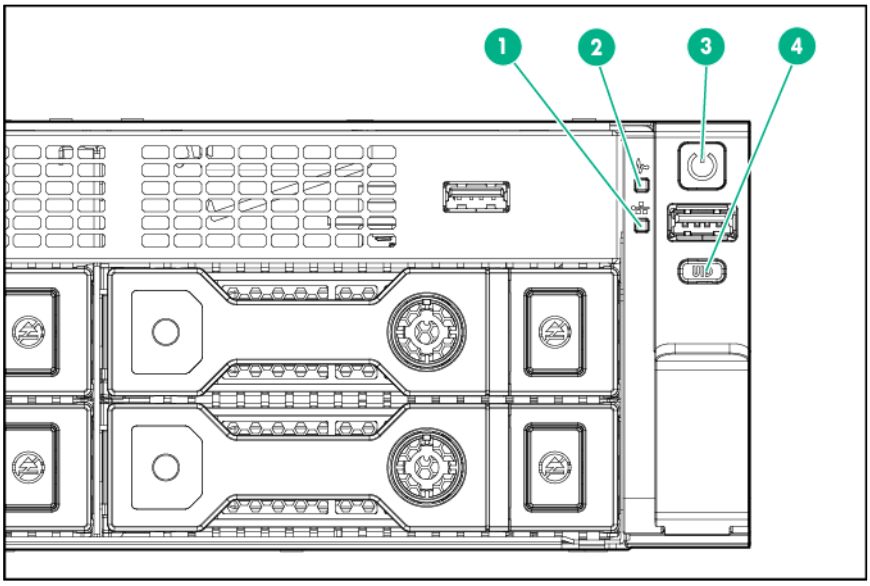

Item	Description	Status
1	NIC status LED	Solid green = Link to network Flashing green = Network active Off = No network activity
2	Health LED	Solid green = Normal Flashing amber = System degraded Flashing red = System critical Fast-flashing red (4 Hz/cycles per sec) = Power fault*
3	Power On/Standby button and system power LED	Solid green = System on Flashing green = Performing power on sequence Solid amber = System in standby Off = No power present**
4	UID button/LED	Solid blue = Activated Flashing blue = Remote management or firmware upgrade in progress Off = Deactivated

* To identify components in a degraded or critical state, see the Systems Insight Display LEDs, check iLO/BIOS logs, and reference the server troubleshooting guide.
** Facility power is not present, power cord is not attached, no power supplies are installed, power supply failure has occurred, or the power button cable is disconnected.

Rear panel components

- Rear panel without the secondary PCI riser cage and rear drive options

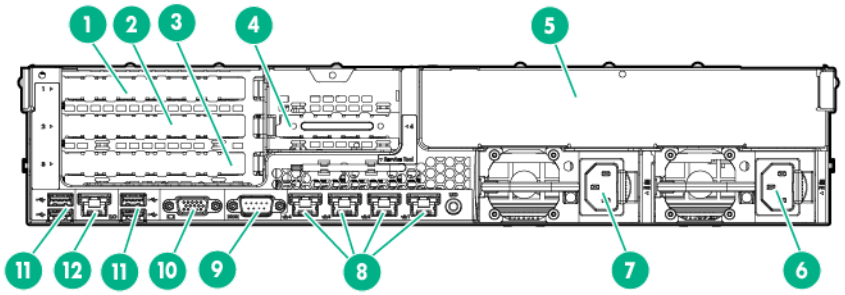

Item	Description
1	Riser board without SAS support: Slot 1 PCIe3 x8 (4, 1)* Riser board with SAS support: Slot 1 PCIe3 x16 (8, 4, 1)*
2	Slot 2 PCIe3 x16 (8, 4, 1)*
3	Only for riser board without SAS support: Slot 3 PCIe3 x8 (8, 4, 1)*
4	Slot 4 PCIe2 x8 (4, 1)*
5	LFF drive blank
6	Power supply 1
7	Power supply 2 (optional)
8	NIC connectors (4-1)
9	Serial connector
10	Video connector
11	USB 2.0 connectors
12	iLO 4 connector

- Rear panel with the secondary PCI riser cage and 2 SFF rear drive options

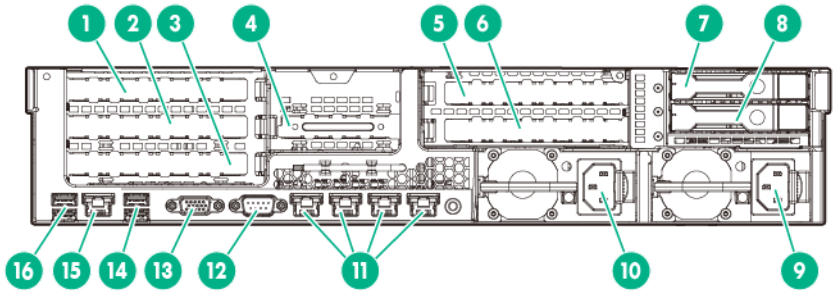

Item	Description
1	Riser board without SAS support: Slot 1 PCIe3 x8 (4, 1)* Riser board with SAS support: Slot 1 PCIe3 x16 (8, 4, 1)*
2	Slot 2 PCIe3 x16 (8, 4, 1)*
3	Only for riser board without SAS support: Slot 3 PCIe3 x8 (8, 4, 1)*
4	Slot 4 PCIe2 x8 (4, 1)*
5	Slot 5 PCIe3 x16 (16, 8, 4, 1) (optional)*

Item	Description
6	Slot 6 PCIe3 x16 (8, 4, 1) (optional)*
7	Rear SFF drive 1 (optional)
8	Rear SFF drive 2 (optional)
9	Power supply 1
10	Power supply 2 (optional)
11	NIC connectors (4-1)
12	Serial connector
13	Video connector
14	USB 2.0 connectors
15	iLO 4 connector
16	USB 2.0 connectors

- Rear panel with the 2 LFF rear drive option

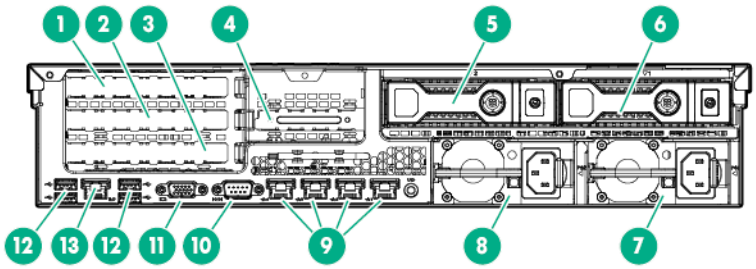

Item	Description
1	Riser board without SAS support: Slot 1 PCIe3 x8 (4, 1)* Riser board with SAS support: Slot 1 PCIe3 x16 (8, 4, 1)*
2	Slot 2 PCIe3 x16 (8, 4, 1)*
3	Only for riser board without SAS support: Slot 3 PCIe3 x8 (8, 4, 1)*
4	Slot 4 PCIe2 x8 (4, 1)*
5	Rear LFF drive 1 (optional)
6	Rear LFF drive 2 (optional)
7	Power supply 1
8	Power supply 2 (optional)
9	NIC connectors (4-1)
10	Serial connector
11	Video connector
12	USB 2.0 connectors
13	iLO 4 connector

* For more information on the riser board slots supported by the onboard PCI riser connectors, see "PCIe riser board slot definitions (on page 90)."

Rear panel LEDs and buttons

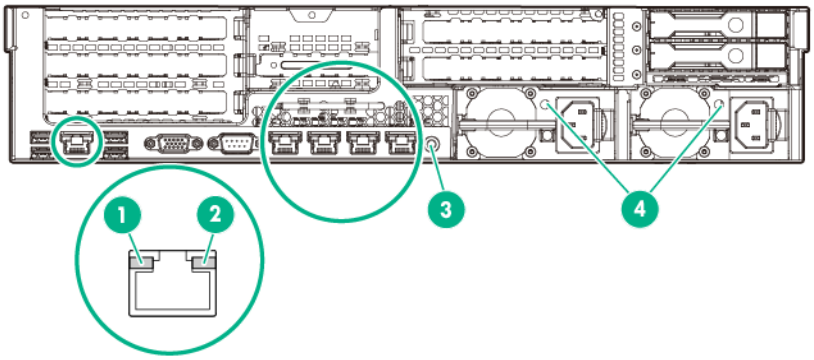

Item	Description	Status
1	NIC link LED	Solid green = Link exists Off = No link exists
2	NIC activity LED	Solid green = Link to network Flashing green = Network active Off = No network activity
3	UID button/LED	Solid blue = Activated Flashing blue = Remote management or firmware upgrade in progress Off = Deactivated
4	Power supply LED	Solid green = Normal Off = One or more of the following conditions exists: • Power is unavailable • Power supply failed • Power supply is in standby mode • Power supply error

PCIe riser board slot definitions

Slot number	Riser board option	Type	Length	Height	Connector link width	Negotiable link width
1	Riser board without SAS support	PCIe3	Full	Full	x8	x4
	Riser board with SAS support	PCIe3	Full	Full	x16	x8
2	Riser board options with and without SAS support	PCIe3	Half	Full	x16	x8
3	Riser board without SAS support	PCIe3	Half	Full	x8	x8
4	Low-profile riser board	PCIe2	Half	Half	x8	x4
5	PCIe x16 riser board*	PCIe3	Full	Full	x16	x16
6	PCIe x16 riser board*	PCIe3	Half	Full	x16	x8

* Ships with the secondary PCI riser cage option

System board components

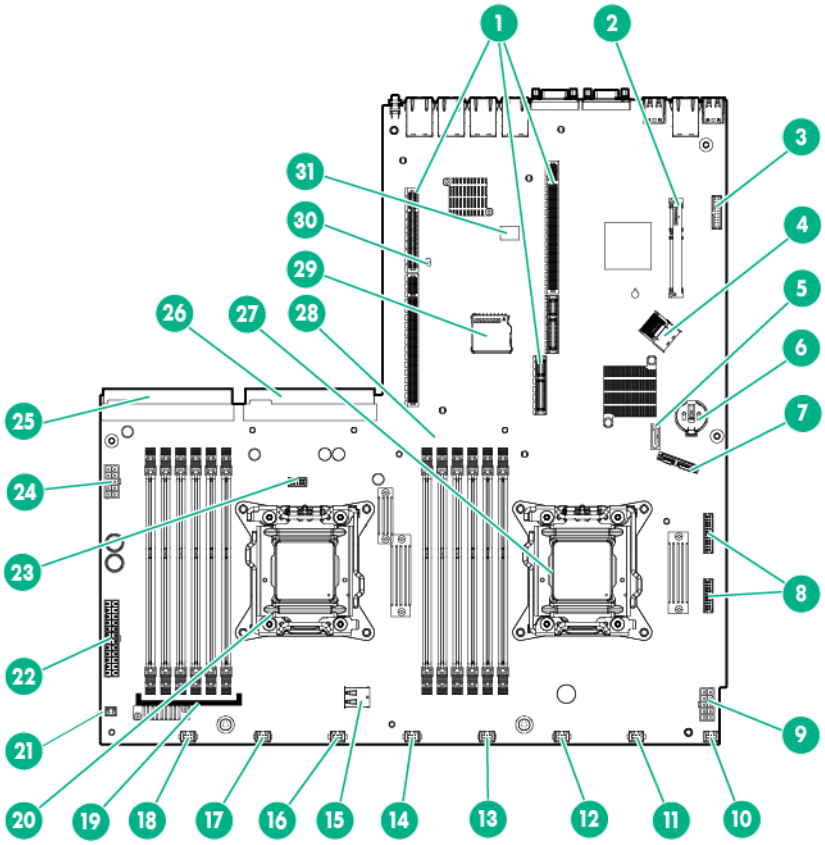

Item	Description
1	PCI riser connectors*
2	Cache module connector
3	TPM connector
4	Mini-SAS connector
5	SATA drive connector
6	System battery
7	SATA optical/storage drive connector
8	Front panel connectors
9	Primary GPU power connector
10	Reserved
11	Fan connector 6
12	Fan connector 5
13	Fan connector 4
14	Reserved
15	Internal USB connector
16	Fan connector 3
17	Fan connector 2
18	Fan connector 1
19	Processor 2 DIMM slots
20	Processor socket 2

Item	Description
21	Discovery service connector
22	Drive backplane power connector
23	Drive sideband signal connector
24	Secondary GPU power connector
25	Power supply connector 1
26	Power supply connector 2
27	Processor socket 1
28	Processor 1 DIMM slots
29	SD card slot
30	NMI header
31	System maintenance switch

* For more information on the riser board slots supported by the onboard PCI riser connectors, see "PCIe riser board slot definitions (on page 90)."

DIMM slot locations

DIMM slots are numbered sequentially (1 through 6) for each processor. The supported AMP modes use the letter assignments for population guidelines.

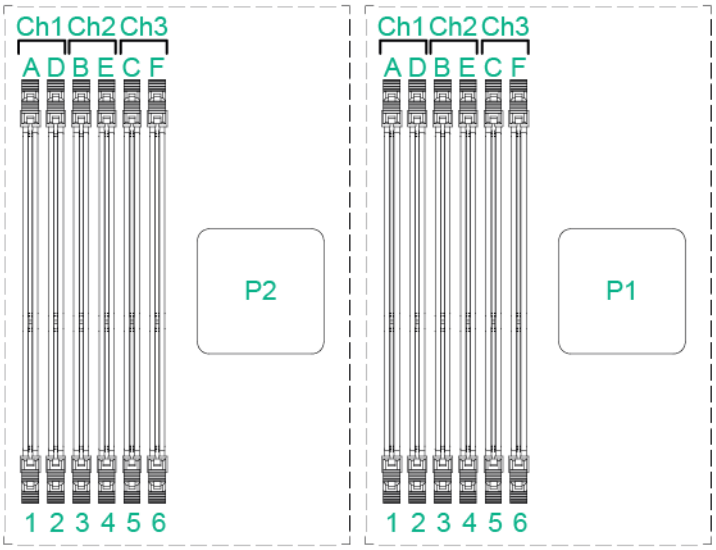

System maintenance switch

Switch	Default	Function
1	Off	Off = No function On = iLO 4 security is disabled
2	Off	Off = System configuration can be changed On = System configuration is locked
5	Off	Off = Power-on password is enabled On = Power-on password is disabled
6	Off	Off = No function On = ROM reads configuration as invalid

Switch	Default	Function
3, 4, 7, 8, 9, 10, 11, 12	—	Reserved

When the system maintenance switch position 6 is set to the On position, the system is prepared to erase all system configuration settings from both CMOS and NVRAM.

△ **CAUTION:** Clearing CMOS and/or NVRAM deletes configuration information. Be sure to properly configure the server or data loss could occur.

NMI functionality

An NMI crash dump creates a crash dump log before resetting a system which is not responding.

Crash dump log analysis is an essential part of diagnosing reliability problems, such as failures of operating systems, device drivers, and applications. Many crashes freeze a system, and the only available action for administrators is to restart the system. Resetting the system erases any information which could support problem analysis, but the NMI feature preserves that information by performing a memory dump before a system reset.

To force the system to invoke the NMI handler and generate a crash dump log, do one of the following:

- Use the iLO Virtual NMI feature.
- Short the NMI header ("System board components" on page 91).

For more information, see the Hewlett Packard Enterprise website (http://www.hpe.com/support/NMI).

Drive numbering

In an 8-bay drive cage, when only one SATA cable is connected, the server can only support a 4-drive configuration. In this configuration, drive bays 1 through 4 are populated, while drive bays 5 through 8 have drive blanks.

When the two-port SATA cable option is connected, the server supports a 6-drive configuration. In this configuration, drive bays 1 through 6 are populated, while drive bays 7 and 8 have drive blanks.

- 8-bay SFF drive model

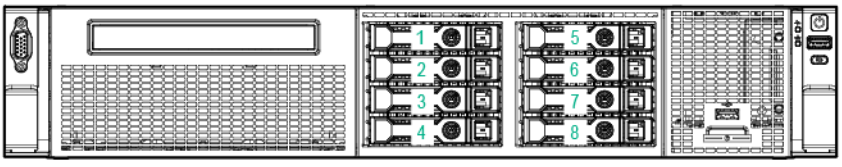

- 8-bay LFF drive model

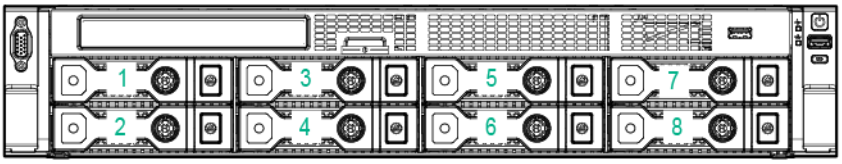

- 8+8-bay SFF drive model

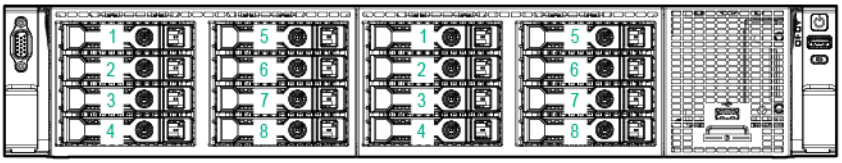

- 12-bay LFF drive model (expander backplane)



- 25-bay SFF drive model

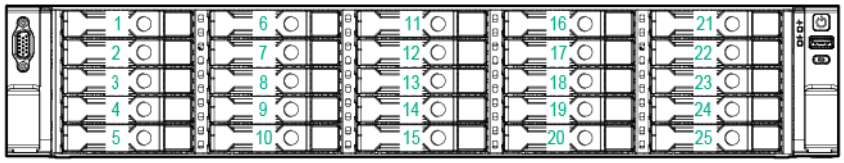

Drive LED definitions

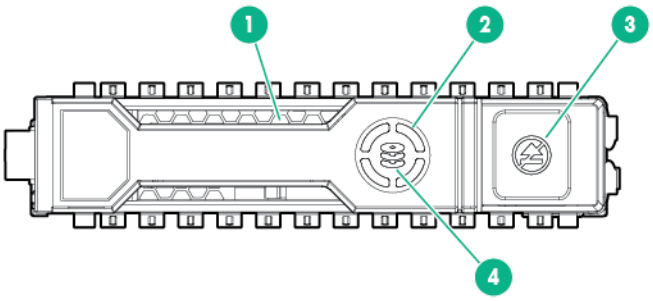

Item	LED	Status	Definition
1	Locate	Solid blue	The drive is being identified by a host application.
		Flashing blue	The drive carrier firmware is being updated or requires an update.
2	Activity ring	Rotating green	Drive activity
		Off	No drive activity
3	Do not remove	Solid white	Do not remove the drive. Removing the drive causes one or more of the logical drives to fail.
		Off	Removing the drive does not cause a logical drive to fail.
4	Drive status	Solid green	The drive is a member of one or more logical drives.
		Flashing green	The drive is rebuilding or performing a RAID migration, stripe size migration, capacity expansion, or logical drive extension, or is erasing.
		Flashing amber/green	The drive is a member of one or more logical drives and predicts the drive will fail.
		Flashing amber	The drive is not configured and predicts the drive will fail.
		Solid amber	The drive has failed.
		Off	The drive is not configured by a RAID controller.

IMPORTANT: When the SAS-enabled riser board with the Smart Array B320i Controller is installed in the server, the embedded Smart Array B120i Controller is disabled automatically. When this condition occurs:

- Drives connected to the system board operate in AHCI or Legacy mode.
- In AHCI or Legacy mode, drives cannot be a part of a hardware RAID or a logical drive.
- The Locate, Drive status, and Do not remove LEDs of the affected drives are disabled.

FBWC module LED definitions

The FBWC module has three single-color LEDs (one amber and two green). The LEDs on the cache module installed on a storage controller are duplicated on the reverse side of the module to facilitate status viewing.

- Cache module installed on a storage controller

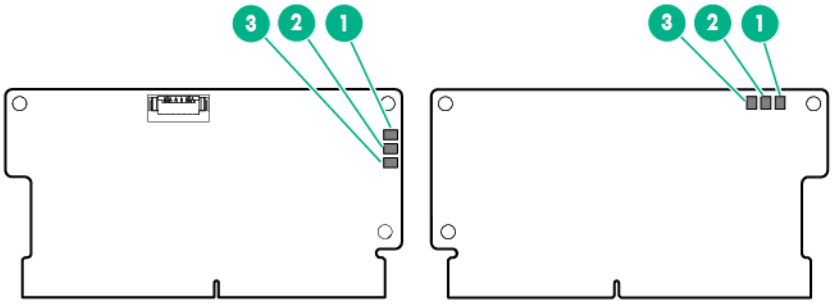

- Cache module installed on the system board

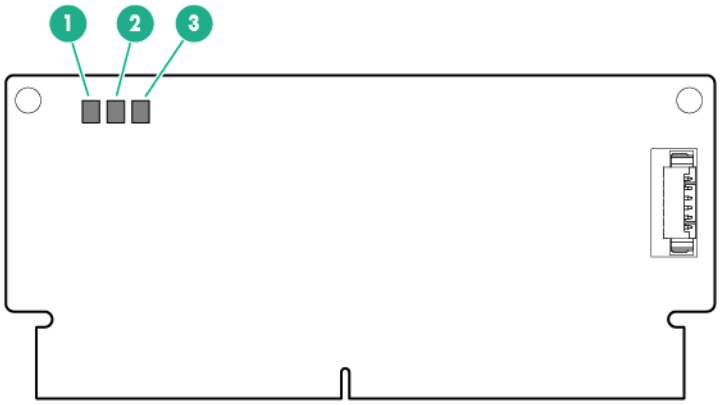

1 - Amber	2 - Green	3 - Green	Interpretation
Off	Off	Off	The cache module is not powered.
Off	Flashing 0.5 Hz	Flashing 0.5 Hz	The cache microcontroller is executing from within its boot loader and receiving new flash code from the host controller.
Off	Flashing 1 Hz	Flashing 1 Hz	The cache module is powering up, and the capacitor pack is charging.
Off	Off	Flashing 1 Hz	The cache module is idle, and the capacitor pack is charging.
Off	Off	On	The cache module is idle, and the capacitor pack is charged.
Off	On	On	The cache module is idle, the capacitor pack is charged, and the cache contains data that has not yet been written to the drives.
Off	Flashing 1 Hz	Off	A backup is in progress.
Off	On	Off	The current backup is complete with no errors.
Flashing 1 Hz	Flashing 1 Hz	Off	The current backup failed, and data has been lost.
Flashing 1 Hz	Flashing 1 Hz	On	A power error occurred during the previous or current boot. Data might be corrupt.
Flashing 1 Hz	On	Off	An overtemperature condition exists.
Flashing 2 Hz	Flashing 2 Hz	Off	The capacitor pack is not attached.
Flashing 2 Hz	Flashing 2 Hz	On	The capacitor has been charging for 10 minutes, but has not reached sufficient charge to perform a full backup.
On	On	Off	The current backup is complete, but power fluctuations occurred during the backup.
On	On	On	The cache module microcontroller has failed.

Fan locations

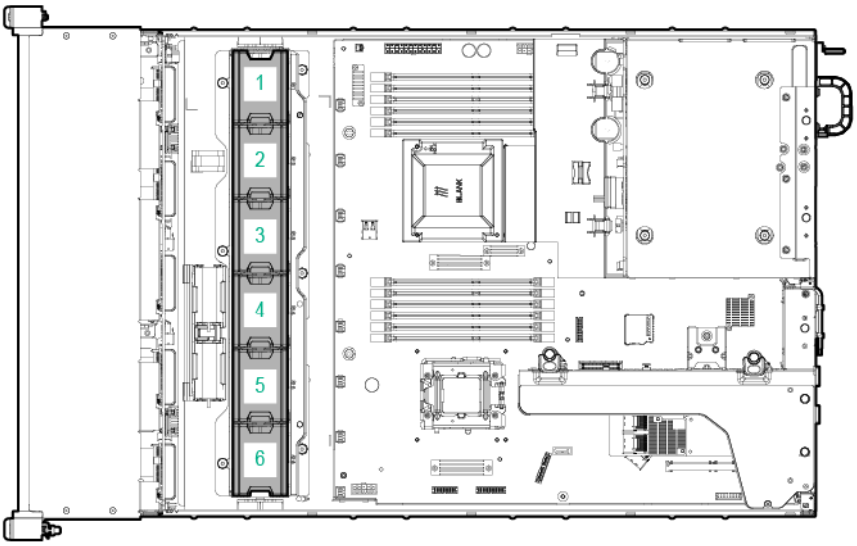

Cabling

Cabling overview

This section provides guidelines that help you make informed decisions about cabling the server and hardware options to optimize performance.

For information on cabling peripheral components, refer to the white paper on high-density deployment at the Hewlett Packard Enterprise website (http://www.hpe.com/products/servers/platforms).

△ **CAUTION:** When routing cables, always be sure that the cables are not in a position where they can be pinched or crimped.

Front panel cabling

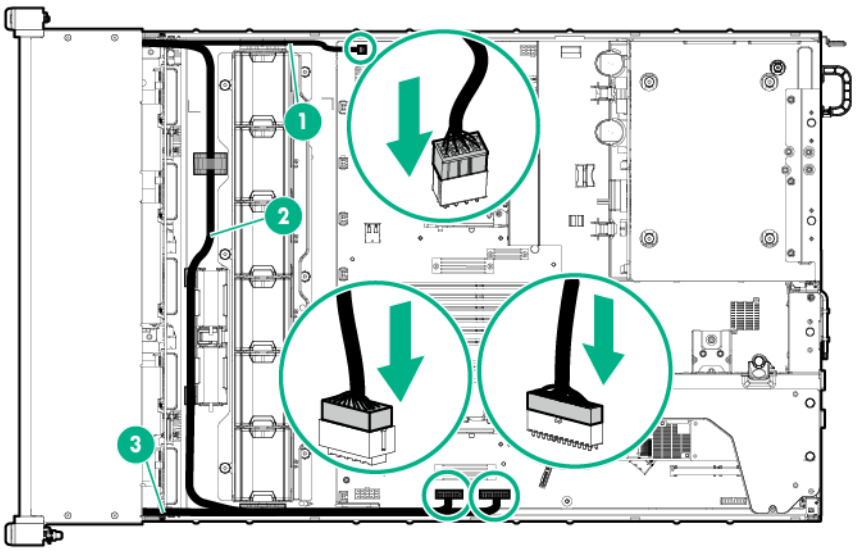

Item	Description
1	Discovery service cable
2	Front video cable
3	Front power/USB cable

Storage cabling

The FBWC capacitor pack cabling is shown in the following images. The FBWC solution is a separately purchased option. This server supports FBWC module installation ("FBWC module" on page 64) in the system board or in a storage controller.

Depending on the controller option installed, the actual storage controller connectors might look different from what is shown in this section.

4 LFF SATA cabling

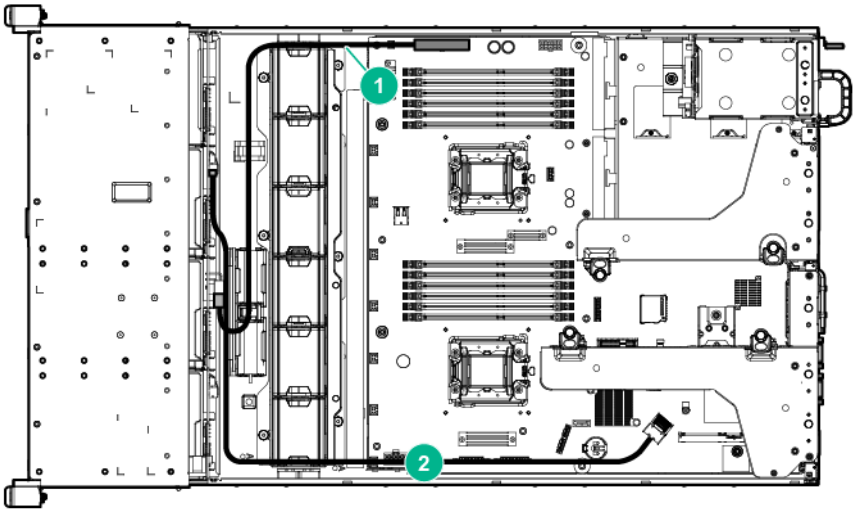

Item	Description
1	Power cable
2	Mini-SAS cable

4 SFF SATA cabling_Sausalito/Victora_rev1

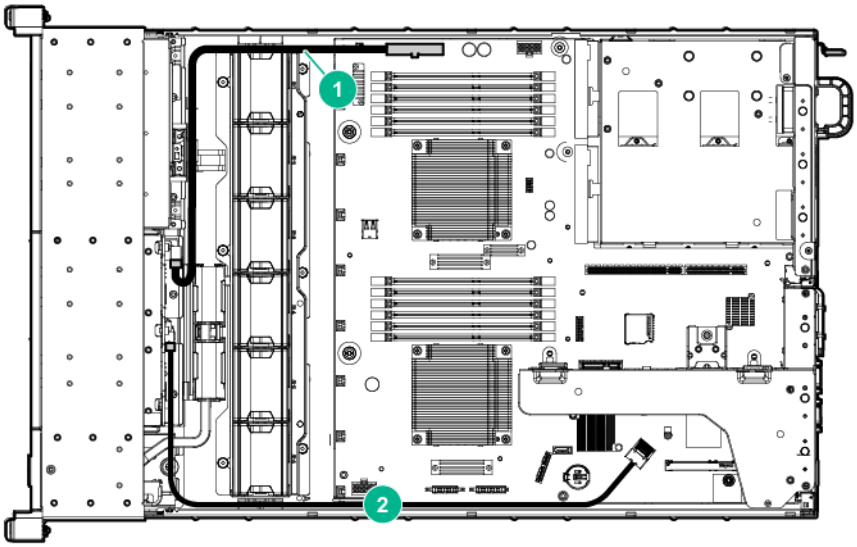

Item	Description
1	Power cable
2	Mini-SAS cable

6 LFF SATA cabling

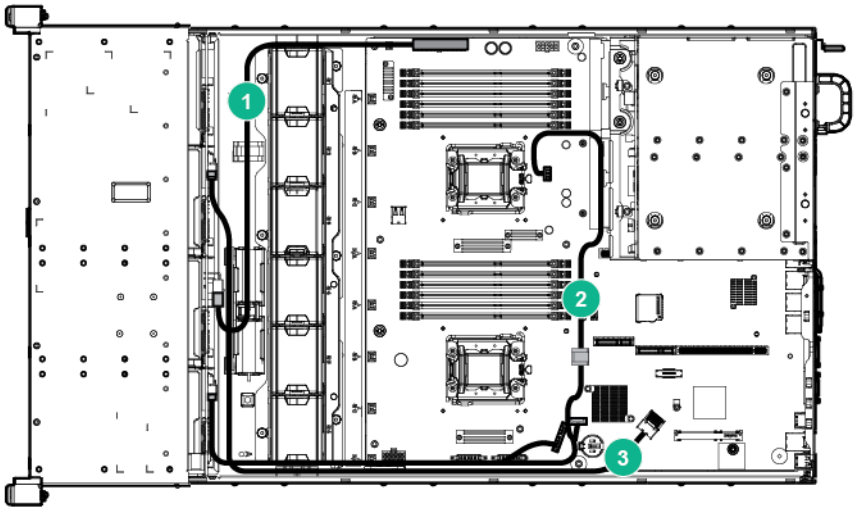

Item	Description
1	Power cable
2	Two-port SATA cable
3	Mini-SAS cable

6 SFF SATA cabling

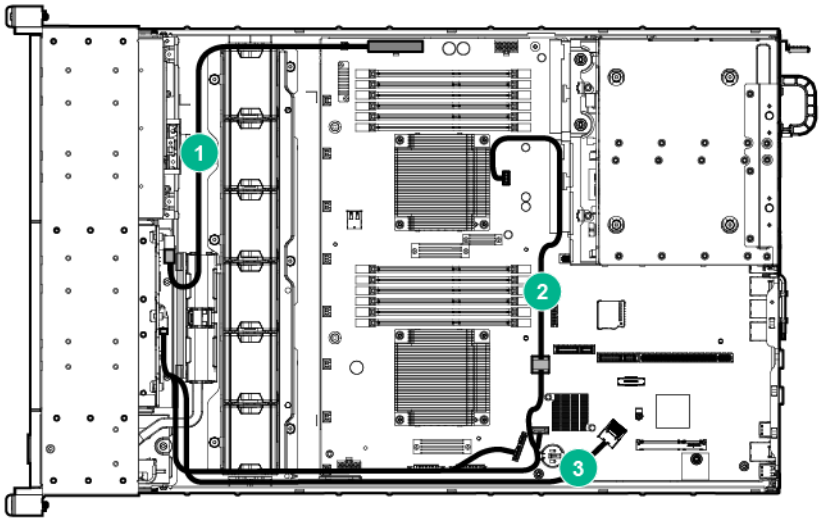

Item	Description
1	Power cable
2	Two-port SATA cable
3	Mini-SAS cable

8 LFF cabling

- Mini-SAS cables connected to a riser board with SAS support

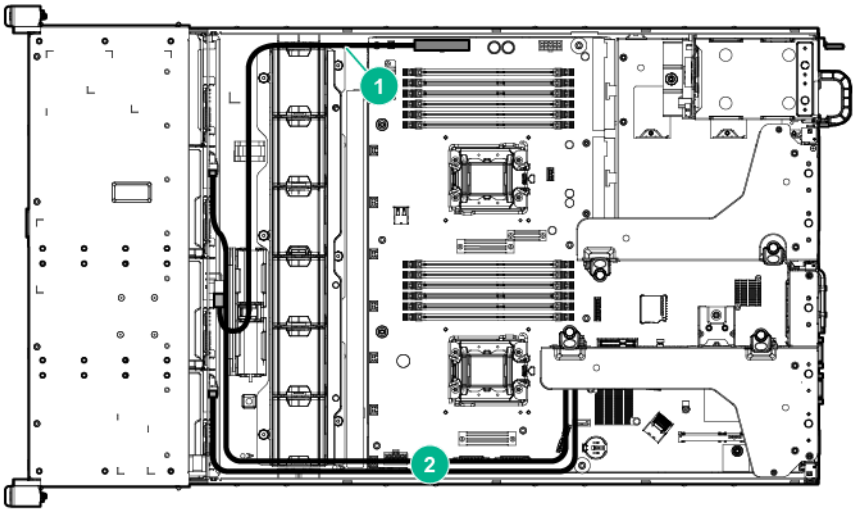

Item	Description
1	Power cable
2	Mini-SAS cables

- Mini-SAS cables connected to a storage controller option

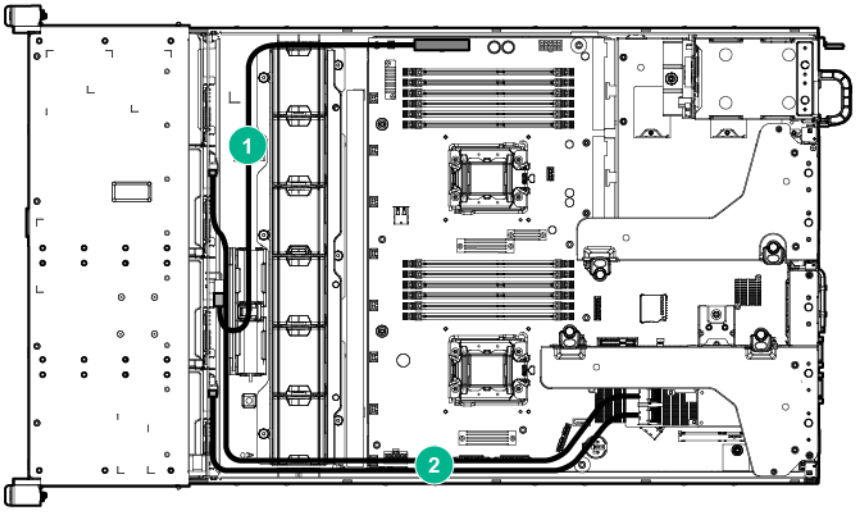

Item	Description
1	Power cable
2	Mini-SAS cables

- Mini-SAS Y-cable connected to the P430 storage controller option

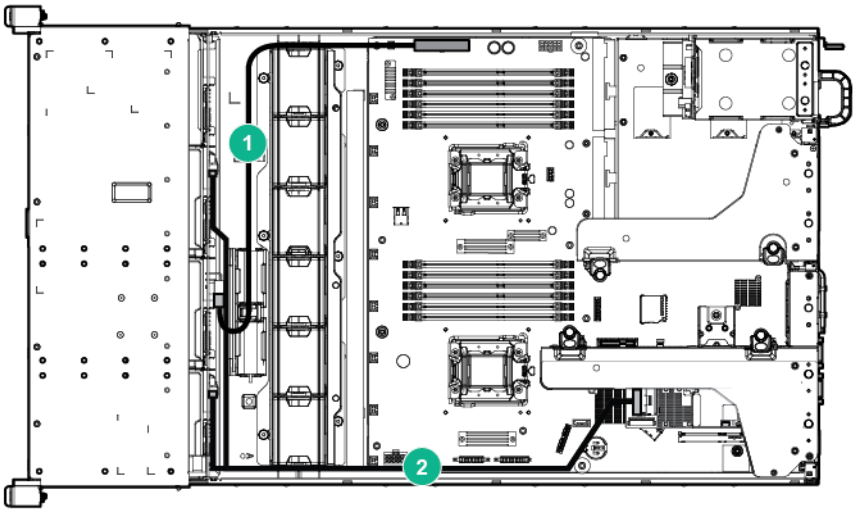

Item	Description
1	Power cable
2	Mini-SAS Y-cable

- Mini-SAS Y-cable connected to the P830 storage controller option

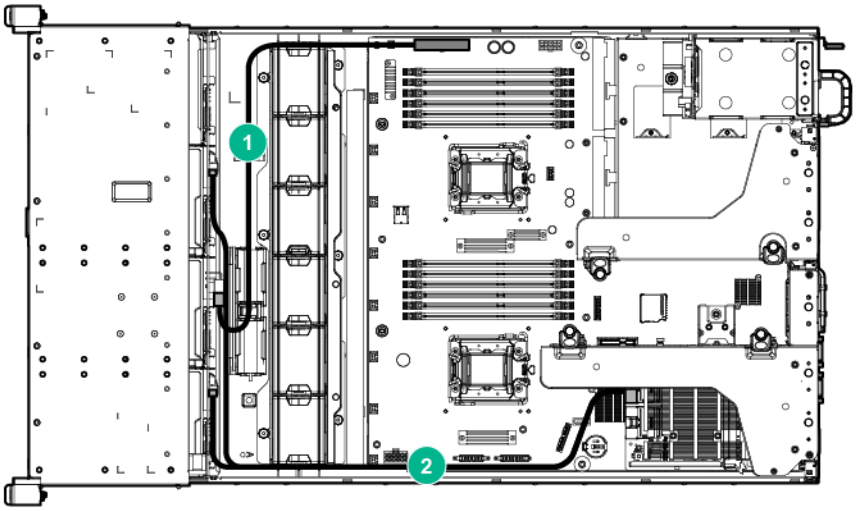

Item	Description
1	Power cable
2	Mini-SAS Y-cable

8 SFF cabling

- Mini-SAS cables connected to a riser board with SAS support

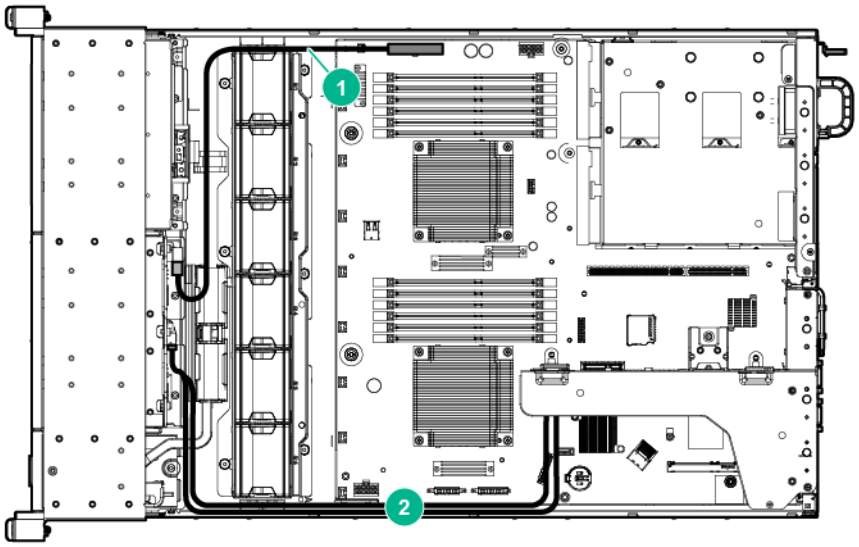

Item	Description
1	Power cable
2	Mini-SAS cables

- Mini-SAS cables connected to a storage controller option

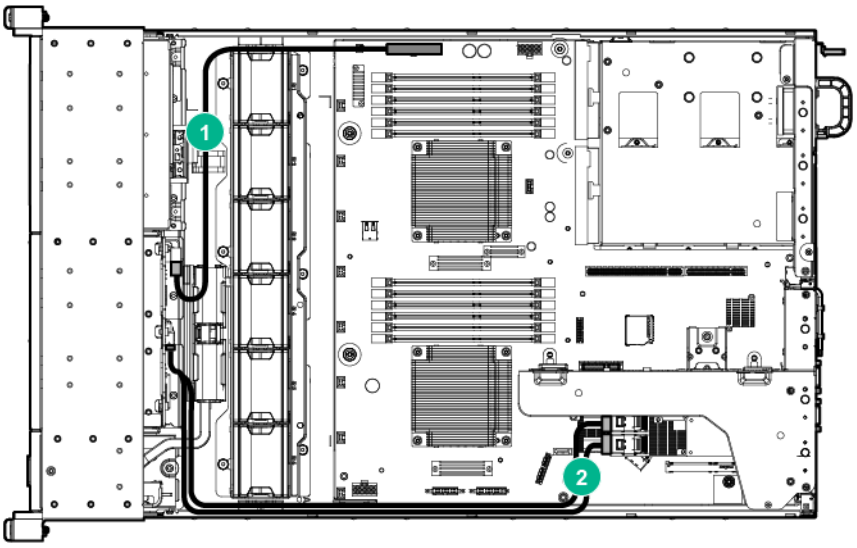

Item	Description
1	Power cable
2	Mini-SAS cables

- Mini-SAS Y-cable connected to the P430 storage controller option

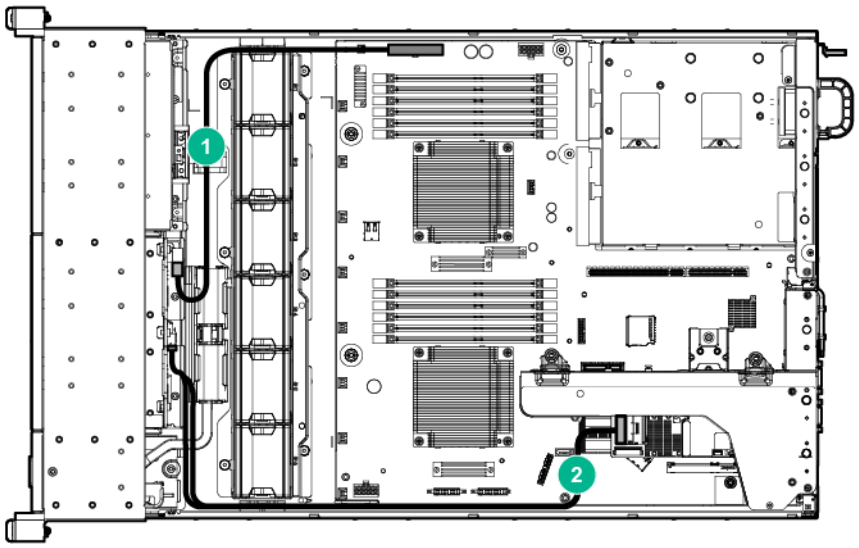

Item	Description
1	Power cable
2	Mini-SAS Y-cable

- Mini-SAS Y-cable connected to the P830 storage controller option

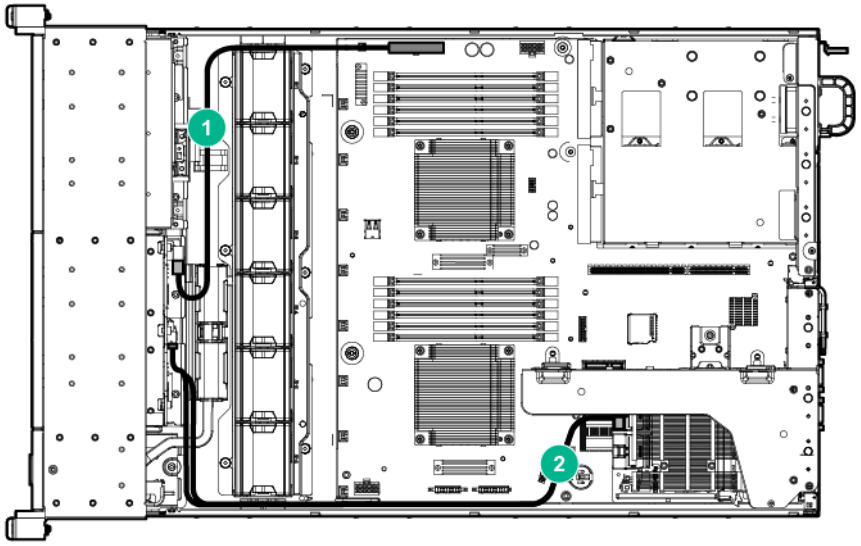

Item	Description
1	Power cable
2	Mini-SAS Y-cable

8+8 SFF cabling

- Mini-SAS cables connected to a storage controller option installed in the primary PCI riser cage

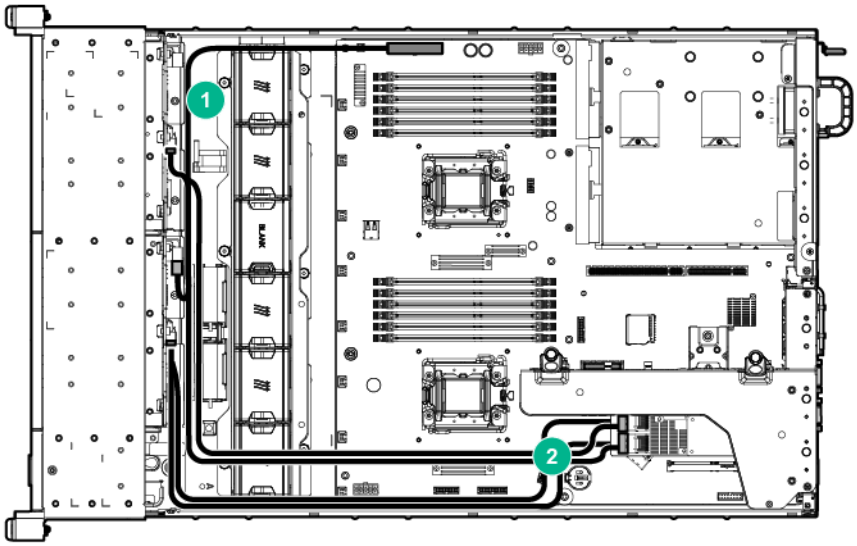

Item	Description
1	Power cable
2	Mini-SAS cables

- Mini-SAS cables connected to a storage controller option and a riser board with SAS support installed in the primary PCI riser cage

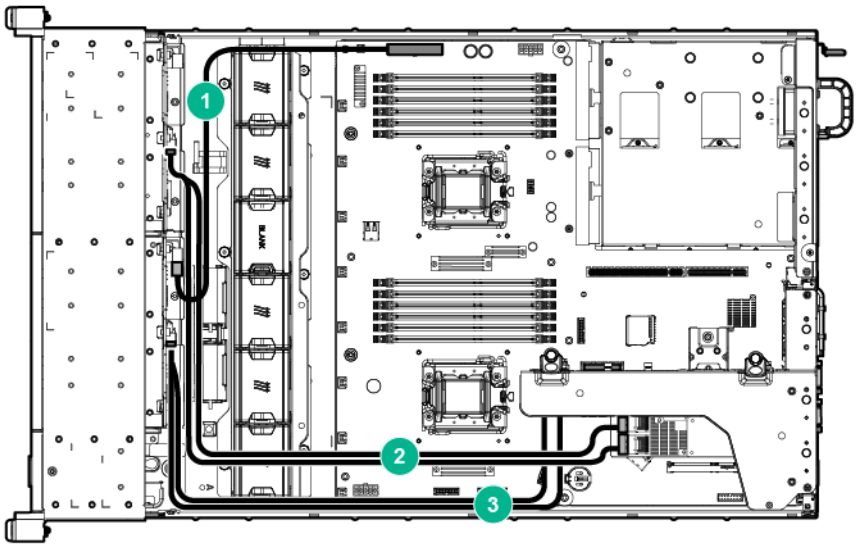

Item	Description
1	Power cable
2	Mini-SAS cables to the storage controller option
3	Mini-SAS cables to a riser board with SAS support

- Mini-SAS cables connected to a storage controller option installed in the secondary PCI riser cage, and a riser board with SAS support installed in the primary PCI riser cage.

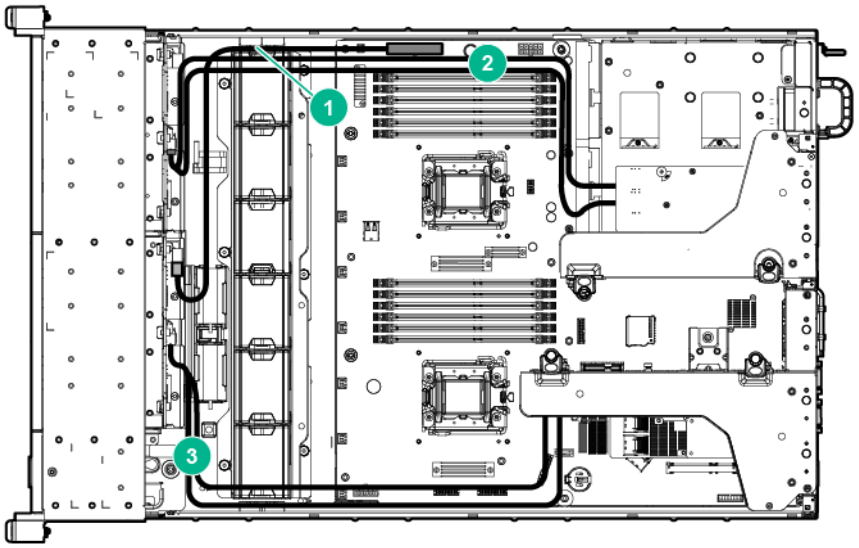

Item	Description
1	Power cable
2	Mini-SAS cables to the storage controller option
3	Mini-SAS cables to the riser board with SAS support

- Mini-SAS cables connected to storage controller options installed in separate PCI riser cages

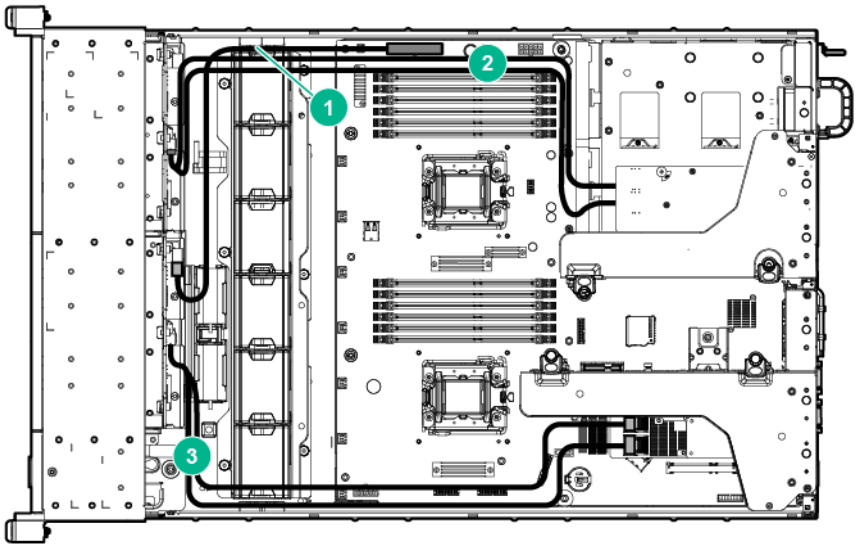

Item	Description
1	Power cable
2	Mini-SAS cables to the secondary PCI riser cage
3	Mini-SAS cables to the primary PCI riser cage

- Mini-SAS Y-cable connected to the P430 storage controller option

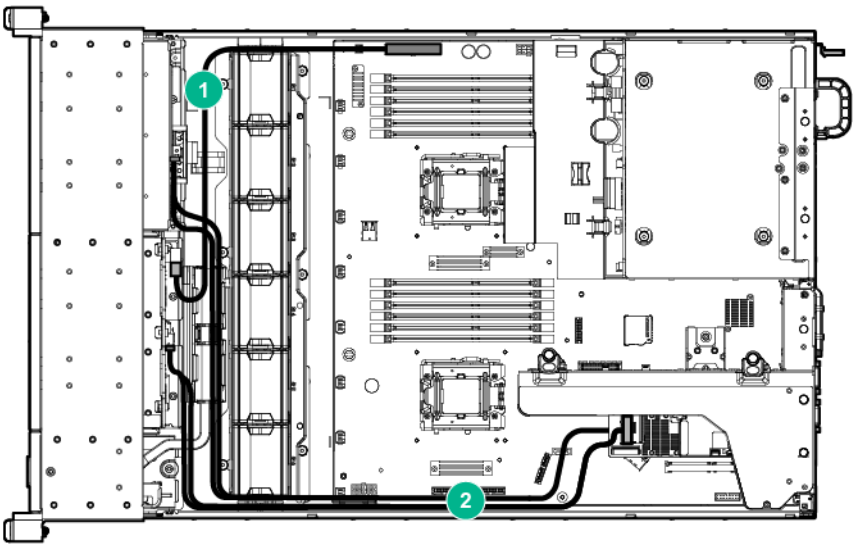

Item	Description
1	Power cable
2	Mini-SAS Y-cables

- Mini-SAS Y-cables connected to the P830 storage controller option

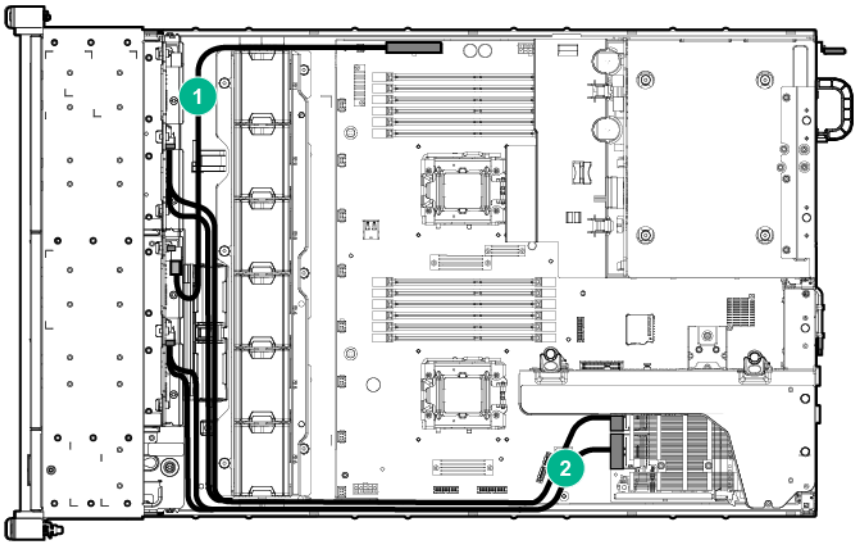

Item	Description
1	Power cable
2	Mini-SAS Y-cables

12 LFF cabling

- Mini-SAS cables connected to a storage controller option

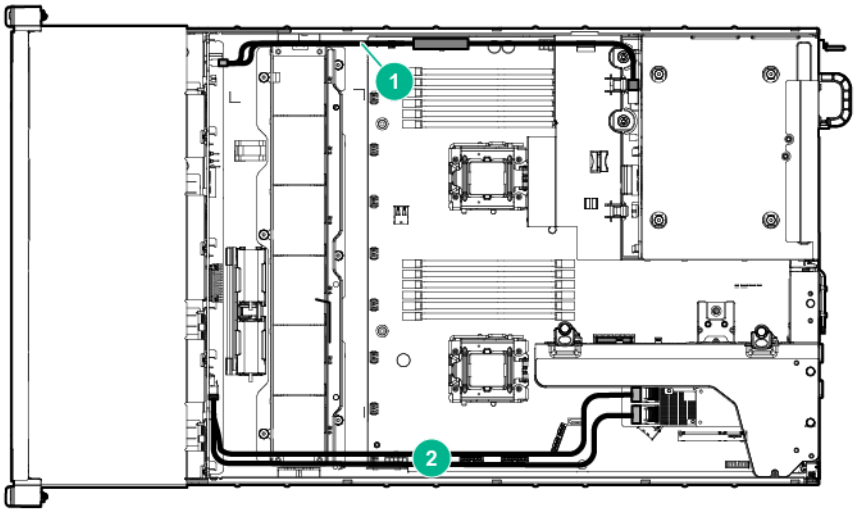

Item	Description
1	Power cable
2	Mini-SAS cables

- Mini-SAS Y-cable connected to the P430 storage controller option

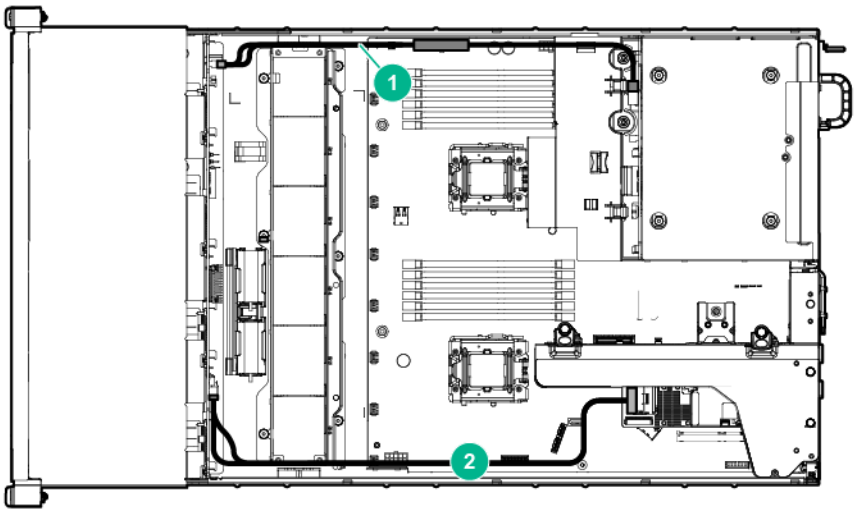

Item	Description
1	Power cable
2	Mini-SAS Y-cable

- Mini-SAS Y-cable connected to the P830 storage controller option

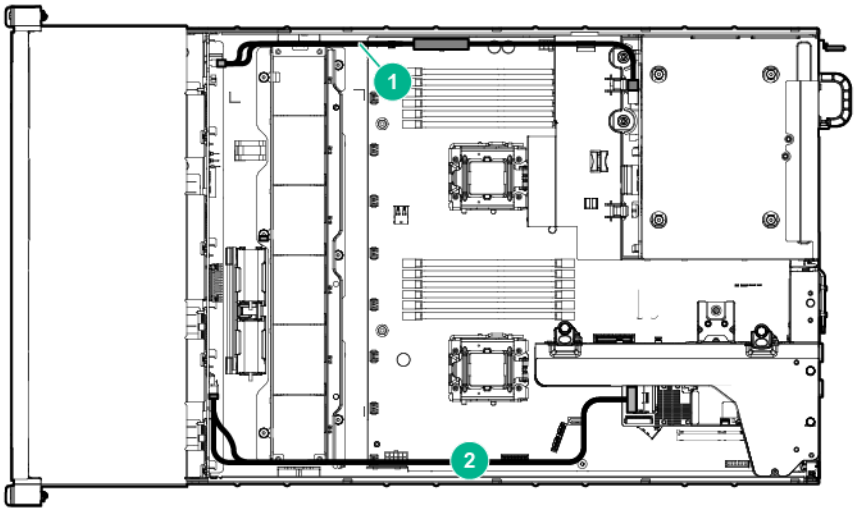

Item	Description
1	Power cable
2	Mini-SAS Y-cable

25 SFF cabling

- Mini-SAS cables connected to a storage controller option

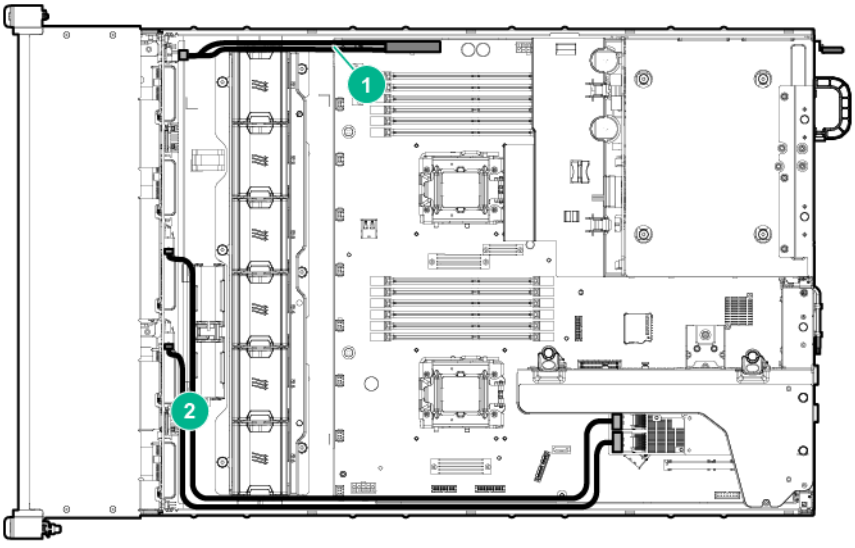

Item	Description
1	Power cable
2	Mini-SAS cables

- Mini-SAS Y-cable connected to the P430 storage controller option

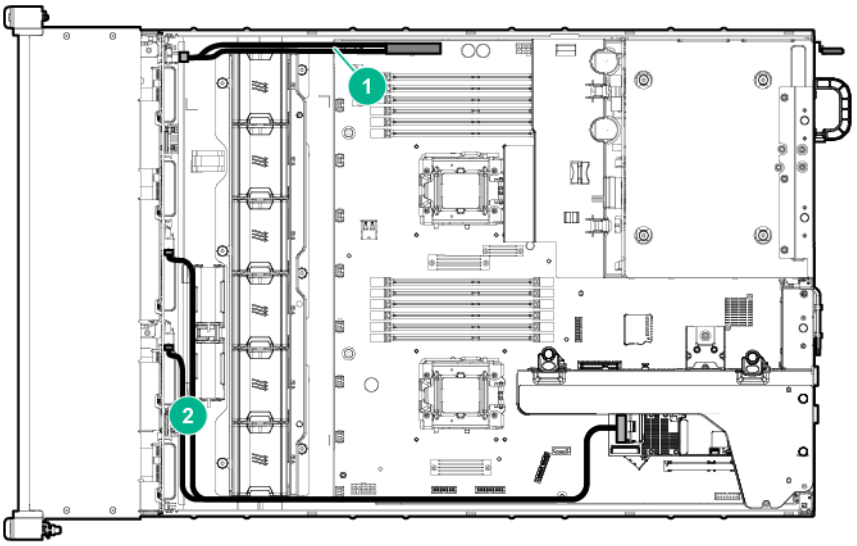

Item	Description
1	Power cable
2	Mini-SAS Y-cable

- Mini-SAS Y-cable connected to the P830 storage controller option

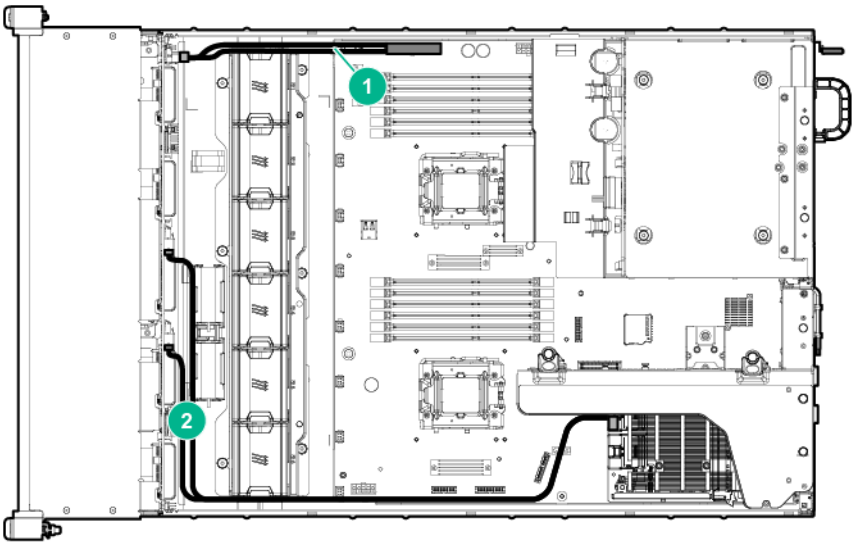

Item	Description
1	Power cable
2	Mini-SAS Y-cable

2 LFF rear drive cabling

- Sideband signal and SATA cables connected to the system board

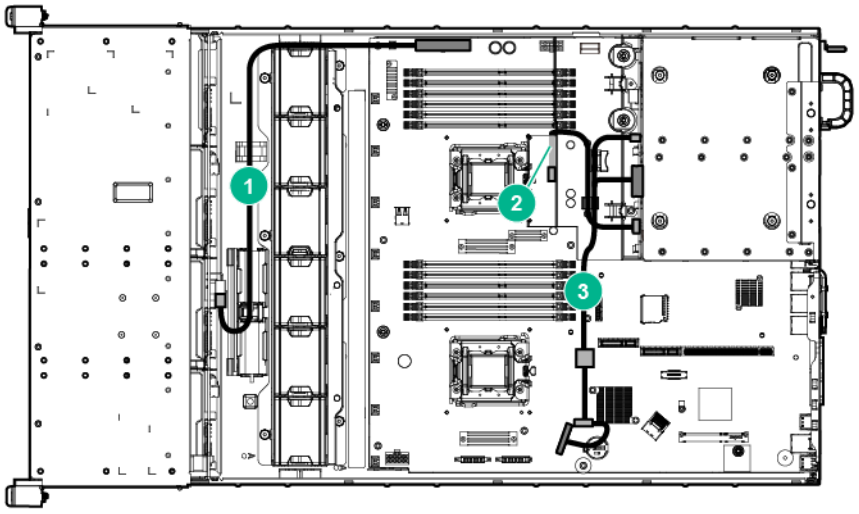

Item	Description
1	Power cable
2	Sideband signal cable
3	SATA cable

- Sideband signal and SATA cables connected to the expander backplane

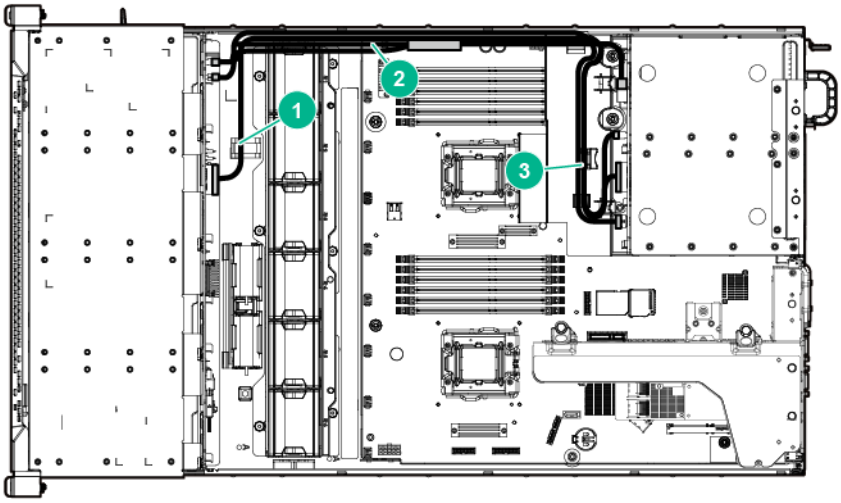

Item	Description
1	SATA cable
2	Power cable
3	Sideband signal cable

2 SFF rear drive cabling

- Sideband signal and SATA cables connected to the system board

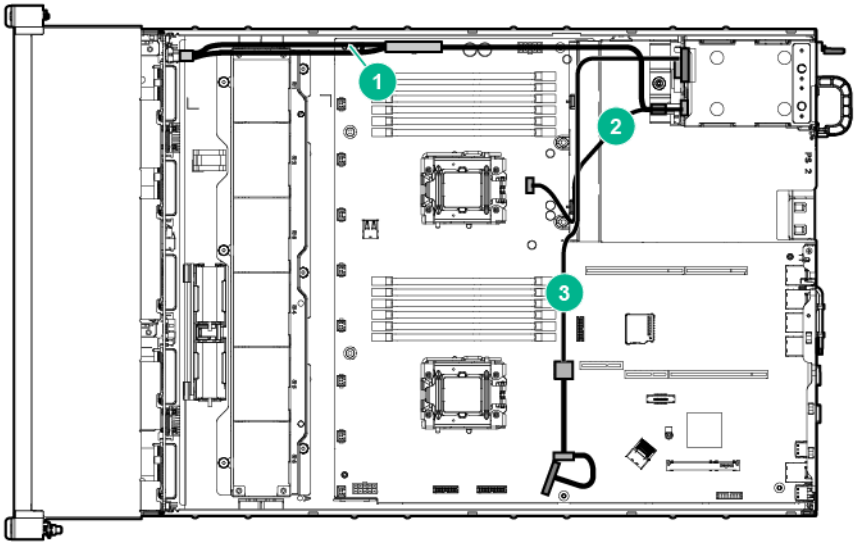

Item	Description
1	Power cable
2	Sideband signal cable
3	SATA cable

- Sideband signal and SATA cables connected to the expander backplane

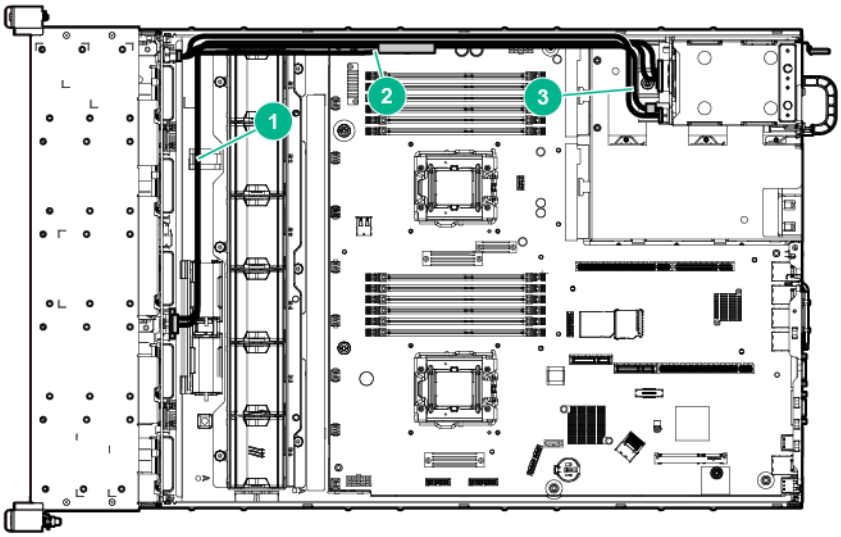

Item	Description
1	SATA cable
2	Power cable
3	Sideband signal cable

Capacitor pack cabling

- Capacitor pack connected to a cache module installed on the system board

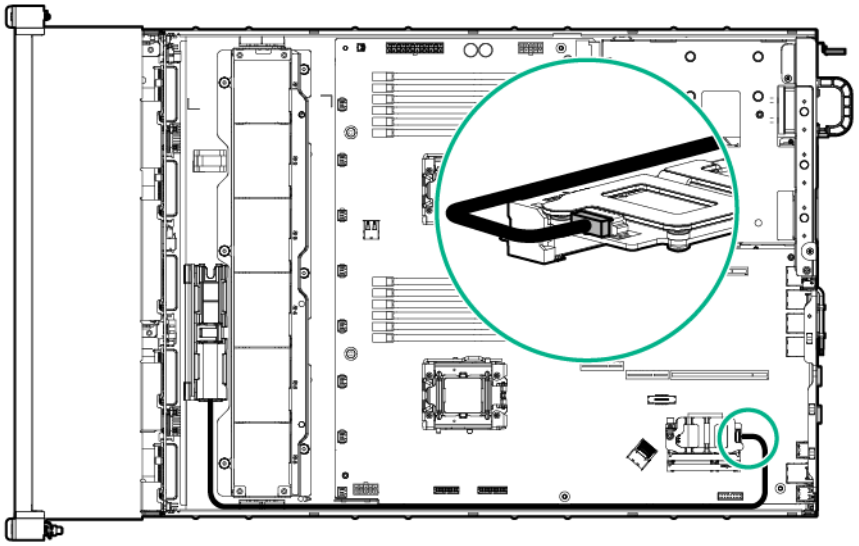

- Capacitor packs connected to cache modules installed in separate storage controllers located in different PCI riser cages

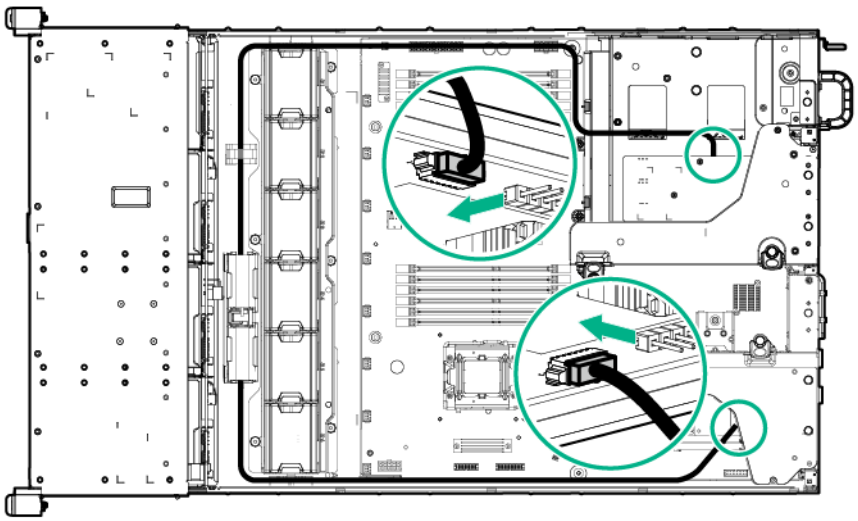

- Capacitor packs connected to cache modules installed in separate storage controllers located in the full-height slots of the primary PCI cage

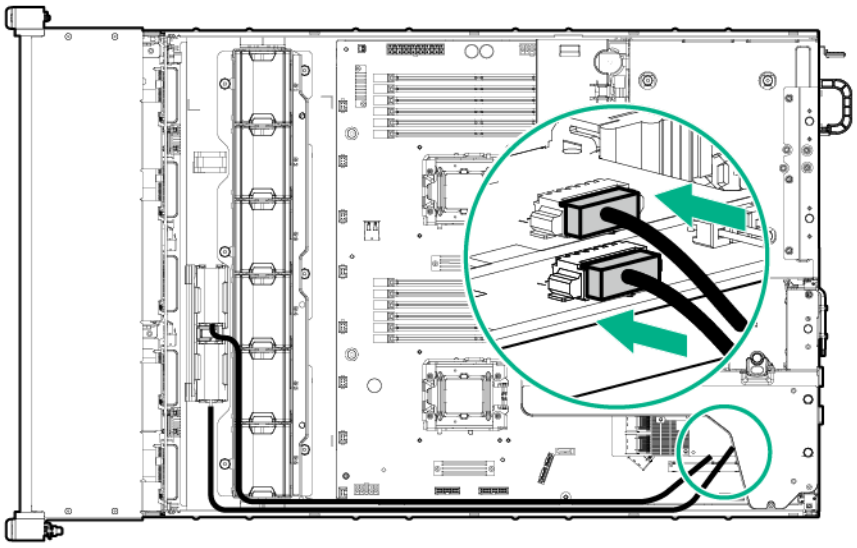

Optical drive cabling

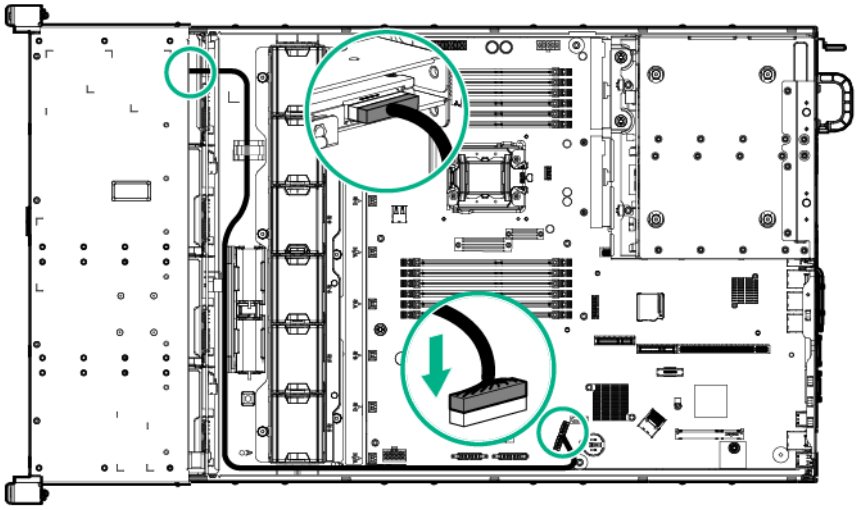

GPU power cabling

- GPU connection options:

- Single-rank GPU

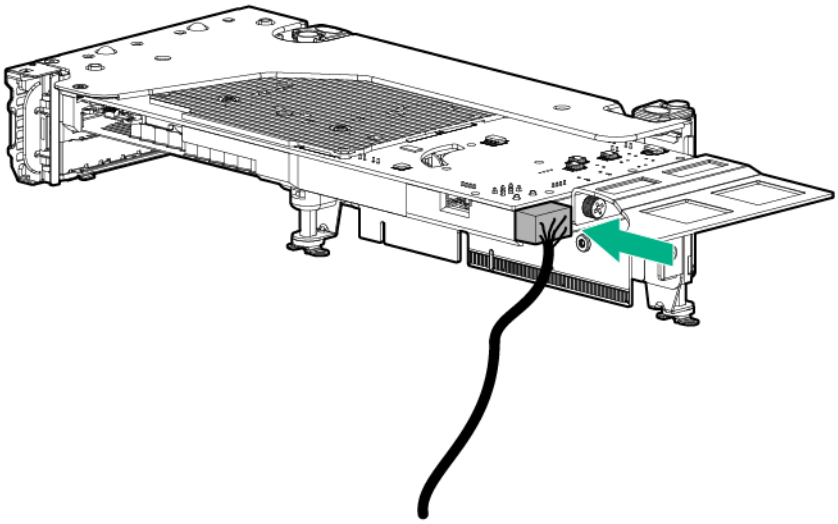

- Dual-rank GPU

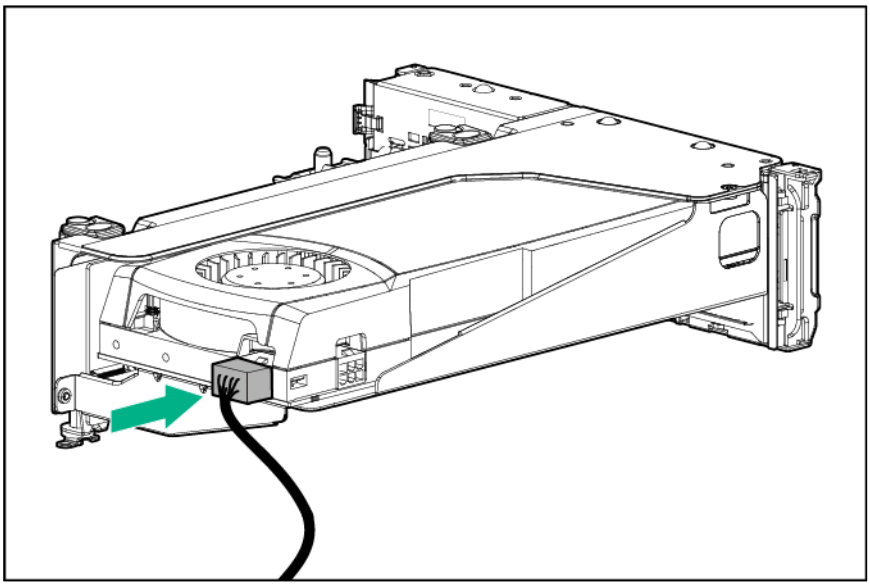

- System board connection options:

- Primary GPU power cabling

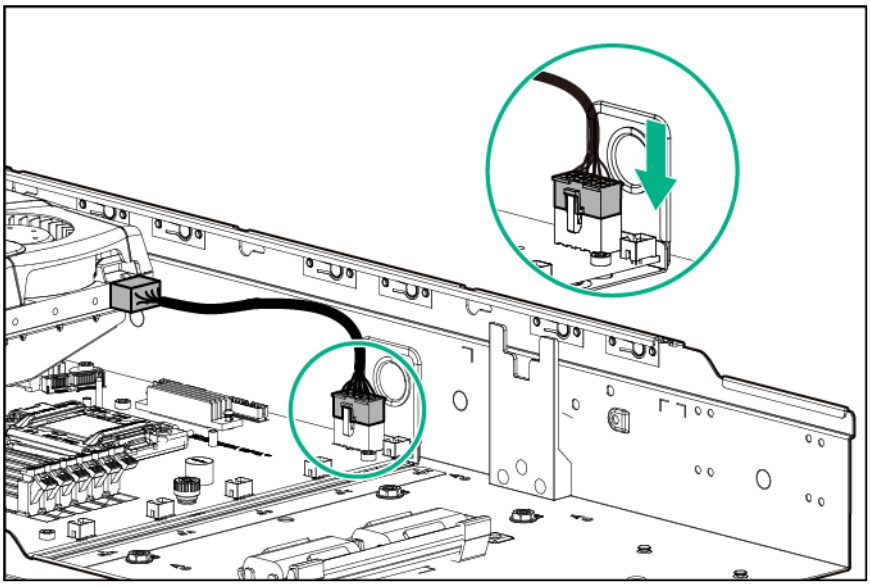

- Secondary GPU power cabling

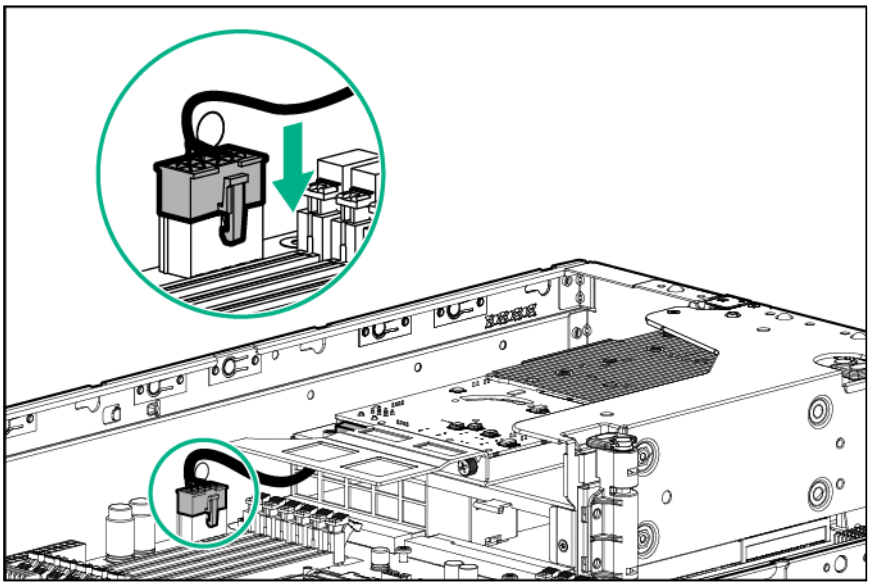

Specifications

Environmental specifications

Specification	Value
Temperature range*	
Operating	10°C to 35°C (50°F to 95°F)
Non-operating	-30°C to 60°C (-22°F to 140°F)
Relative humidity (non-condensing)	
Operating, maximum wet bulb temperature of 28°C (82.4°F)	10% to 90%
Non-operating, maximum wet bulb temperature of 38.7°C (101.7°F)	5% to 95%

* All temperature ratings shown are for sea level. An altitude derating of 1°C per 304.8 m (1.8°F per 1,000 ft) to 3048 m (10,000 ft) is applicable. No direct sunlight allowed.

Mechanical specifications

Dimensions	Value
Height	8.75 cm (3.44 in)
Depth for models with SFF drive cage	69.85 cm (27.5 in)
Depth for models with LFF drive cage	74.93 cm (29.5 in)
Width	44.54 cm (17.54 in)
Weight (approximate range)	—
8 SFF drive model	16.13 kg to 22.20 kg (35.59 lb to 48.98 lb)
8 LFF drive model	16.87 kg to 26.66 kg (37.23 lb to 58.83 lb)
12 LFF drive model	17.29 kg to 32.29 kg (38.83 lb to 71.18 lb)
8+8 SFF drive model	17.99 kg to 24.34 kg (39.7 lb to 53.71 lb)
25 SFF drive model	14.00 kg to 27.00 kg (30.86 lb to 59.52 lb)

Power supply specifications

Depending on installed options, the server is configured with one of the following power supplies:

- HPE 460 W CS Gold Hot-plug Power Supply (92% efficiency) (on page 119)
- HPE 460 W CS Platinum Hot-plug Power Supply (94% efficiency) (on page 119)
- HPE 460 W CS Platinum Plus Hot-plug Power Supply (94% efficiency) (on page 120)
- HPE 750 W CS Gold Hot-plug Power Supply (92% efficiency) (on page 120)
- HPE 750 W CS Platinum Hot-plug Power Supply (94% efficiency) (on page 120)
- HPE 750 W CS Platinum Plus Hot-plug Power Supply (94% efficiency) (on page 121)
- HPE 750 W CS Titanium Hot-plug Power Supply (96% efficiency) (on page 121)

- HPE 750 W CS -48 V DC Hot-plug Power Supply (94% efficiency) (on page 122)
- HPE 1200 W CS Platinum Plus Hot-plug Power Supply (94% efficiency) (on page 123)

For detailed power supply specifications, see the QuickSpecs on the Hewlett Packard Enterprise website. (http://www.hpe.com/info/Quickspecs-CommonSLotPowerSupplies)

△ **CAUTION:** Check the system and power supply input ratings before powering up the server.

HPE 460 W CS Gold Hot-plug Power Supply (92% efficiency)

Specification	Value
Input requirements	—
Rated input voltage	100 V AC to 240 V AC
Rated input frequency	50 Hz to 60 Hz
Rated input current	6 A to 3 A
Rated input power	526 W at 100 V AC input 505 W at 200 V AC input
Btu per hour	1794 at 100 V AC input 1725 at 200 V AC input
Power supply output	—
Rated steady-state power	460 W at 100 V to 120 V AC input 460 W at 200 V to 240 V AC input
Maximum peak power	460 W at 100 V to 120 V AC input 460 W at 200 V to 240 V AC input

HPE 460 W CS Platinum Hot-plug Power Supply (94% efficiency)

Specification	Value
Input requirements	—
Rated input voltage	100 V AC to 240 V AC
Rated input frequency	50 Hz to 60 Hz
Rated input current	6 A to 3 A AC input
Rated input power	517 W at 100 V AC input 496 W at 200 V AC input
Btu per hour	1764 at 100 V AC input 1736 at 120 V AC input 1694 at 200 V AC input 1692 at 208 V AC input 1689 at 220 V AC input 1687 at 230 V AC input 1686 at 240 V AC input
Power supply output	—
Rated steady-state power	460 W at 100 V to 240 V AC input
Maximum peak power	460 W at 100 V to 240 V AC input

HPE 460 W CS Platinum Plus Hot-plug Power Supply (94% efficiency)

Specification	Value
Input requirements	—
Rated input voltage	100 V AC to 240 V AC
Rated input frequency	50 Hz to 60 Hz
Rated input current	6 A to 3 A
Rated input power	509 W at 115 V AC input 495 W at 230 V AC input
Btu per hour	1764 at 100 V AC input 1736 at 115 V AC input 1694 at 200 V AC input 1687 at 230 V AC input
Power supply output	—
Rated steady-state power	460 W at 100 V to 120 V AC input 460 W at 200 V to 240 V AC input
Maximum peak power	460 W at 100 V to 120 V AC input 460 W at 200 V to 240 V AC input

HPE 750 W CS Gold Hot-plug Power Supply (92% efficiency)

Specification	Value
Input requirements	—
Rated input voltage	100 V AC to 240 V AC
Rated input frequency	50 Hz to 60 Hz
Rated input current	9 A to 4.5 A
Rated input power	857 W at 100 V AC input 824 W at 200 V AC input
Btu per hour	2925 at 100 V AC input 2812 at 200 V AC input
Power supply output	—
Rated steady-state power	750 W at 100 V to 120 V AC input 750 W at 200 V to 240 V AC input
Maximum peak power	750 W at 100 V to 120 V AC input 750 W at 200 V to 240 V AC input

HPE 750 W CS Platinum Hot-plug Power Supply (94% efficiency)

Specification	Value
Input requirements	—
Rated input voltage	100 V AC to 240 V AC
Rated input frequency	50 Hz to 60 Hz
Rated input current	9 A to 4.5 A AC input
Maximum rated input power	843 W at 100 V AC input 811 W at 200 V AC input

Btu per hour	2878 at 100 V AC input 2834 at 120 V AC input 2769 at 200 V AC input 2766 at 208 V AC input 2762 at 220 V AC input 2758 at 230 V AC input 2803 at 240 V AC input
Power supply output	—
Rated steady-state power	750 W at 100 V to 240 V AC input
Maximum peak power	750 W at 100 V to 240 V AC input

HPE 750 W CS Platinum Plus Hot-plug Power Supply (94% efficiency)

Specification	Value
Input requirements	—
Rated input voltage	100 V AC to 240 V AC
Rated input frequency	50 Hz to 60 Hz
Rated input current	9 A to 4.5 A
Maximum rated input power	831 W at 115 V AC input 808 W at 230 V AC input
Btu per hour	2878 at 100 V AC input 2834 at 115 V AC input 2769 at 200 V AC input 2758 at 230 V AC input
Power supply output	—
Rated steady-state power	750 W at 100 V to 120 V AC input 750 W at 200 V to 240 V AC input
Maximum peak power	750 W at 100 V to 120 V AC input 750 W at 200 V to 240 V AC input

HPE 750 W CS Titanium Hot-plug Power Supply (96% efficiency)

Specification	Value
Input requirements	—
Rated input voltage	200 V AC to 240 V AC
Rated input frequency	50 Hz to 60 Hz
Rated input current	4.1 A
Maximum rated input power	803 W at 200 V AC input 798 W at 240 V AC input
Btu per hour	2739 at 200 V AC input 2735 at 208 V AC input 2731 at 220 V AC input 2728 at 230 V AC input 2724 at 240 V AC input
Power supply output	—
Rated steady-state power	750 W at 200 V to 240 V AC input

Maximum peak power	750 W at 200 V to 240 V AC input

HPE 750 W CS -48 V DC Hot-plug Power Supply (94% efficiency)

Specification	Value
Input requirements	—
Rated input voltage	-36 V DC to -72 V DC -48 V DC nominal input
Rated input current	23 A at -36 V DC input 17 A at -48 V DC input, nominal input 11 A at -72 V DC input
Rated input power (W)	815 W at -36 V DC input 805 W at -48 V DC input, nominal input 795 W at -72 V DC input
Btu per hour	2780 at -36 V DC input 2740 at -48 V DC input, nominal input 2720 at -72 V DC input
Power supply output	—
Rated steady-state power (W)	750 W
Maximum peak power (W)	750 W

△ **CAUTION:** This equipment is designed to permit the connection of the earthed conductor of the DC supply circuit to the earthing conductor at the equipment.
If this connection is made, all of the following must be met:

- This equipment must be connected directly to the DC supply system earthing electrode conductor or to a bonding jumper from an earthing terminal bar or bus to which the DC supply system earthing electrode conductor is connected.
- This equipment must be located in the same immediate area (such as adjacent cabinets) as any other equipment that has a connection between the earthed conductor of the same DC supply circuit and the earthing conductor, and also the point of earthing of the DC system. The DC system must be earthed elsewhere.
- The DC supply source is to be located within the same premises as the equipment.
- Switching or disconnecting devices must not be in the earthed circuit conductor between the DC source and the point of connection of the earthing electrode conductor.

△ **CAUTION:** To reduce the risk of electric shock or energy hazards:

- This equipment must be installed by trained service personnel, as defined by the NEC and IEC 60950-1, Second Edition, the standard for Safety of Information Technology Equipment.
- Connect the equipment to a reliably grounded SELV source. An SELV source is a secondary circuit that is designed so normal and single fault conditions do not cause the voltages to exceed a safe level (60 V DC).
- The branch circuit overcurrent protection must be rated 24 A.

HPE 1200 W CS Platinum Plus Hot-plug Power Supply (94% efficiency)

Specification	Value
Input requirements	—
Rated input voltage	100 V AC 110 V AC to 120 V AC 200 V AC to 240 V AC
Rated input frequency	50 Hz to 60 Hz
Rated input current	9.1 A at 100 V AC 8.6 A at 110 V AC 6.7 A at 200 V AC
Maximum rated input power	897 W at 100 V AC input 1321 W at 200 V AC input
Btu per hour	3061 at 100 V AC input 4506 at 200 V AC input
Power supply output	—
Rated steady-state power	800 W at 100 V AC input 900 W at 120 V AC input 1200 W at 200 V to 240 V AC input
Maximum peak power	800 W at 100 V AC input 900 W at 120 V AC input 1200 W at 200 V to 240 V AC input

Hot-plug power supply calculations

For hot-plug power supply specifications and calculators to determine electrical and heat loading for the server, see the Hewlett Packard Enterprise Power Advisor website (http://www.hpe.com/info/rackandpower).

Acronyms and abbreviations

ABEND

abnormal end

AHCI

Advanced Host Controller Interface

AMP

Advanced Memory Protection

ASR

Automatic Server Recovery

CSR

Customer Self Repair

DDR3

double data rate-3

EM

enterprise mainstream (HPE SSD endurance class)

ENT

enterprise (Enterprise drive family)

EV

enterprise value (HPE SSD endurance class)

FBWC

flash-backed write cache

GPU

graphics processing unit

HPE CS

HPE Common Slot (power supply)

HPE SIM

HPE Systems Insight Manager

IEC

International Electrotechnical Commission

iLO

Integrated Lights-Out

IML

Integrated Management Log

LFF

large form factor

LRDIMM

load reduced dual in-line memory module

MDL

midline (HPE Midline drive family)

MLC

multilevel cell (NAND memory type used in SSDs)

NMI

nonmaskable interrupt

NVRAM

nonvolatile memory

PCIe

Peripheral Component Interconnect Express

POST

Power-On Self Test

PSU

power supply unit

RBSU

ROM-Based Setup Utility

RDIMM

registered dual in-line memory module

SAS

serial attached SCSI

SATA

serial ATA

SD

Secure Digital

SELV

separated extra low voltage

SFF

small form factor

SLC

single level cell (NAND memory type used in SSDs)

SPP

Service Pack for ProLiant

TPM

Trusted Platform Module

UDIMM

unregistered dual in-line memory module

UID

unit identification

USB

universal serial bus

Documentation feedback

Hewlett Packard Enterprise is committed to providing documentation that meets your needs. To help us improve the documentation, send any errors, suggestions, or comments to Documentation Feedback (mailto:docsfeedback@hpe.com). When submitting your feedback, include the document title, part number, edition, and publication date located on the front cover of the document. For online help content, include the product name, product version, help edition, and publication date located on the legal notices page.

Index

A

access panel 36
Automatic Server Recovery (ASR) 83

B

battery 68
bezel 30

C

cable management arm 32
cabling, drive 99, 100, 101, 102, 104, 106, 109, 110, 112, 113
cabling, FBWC 114
cabling, GPU 115
cabling, optical drive 115
cache module 64, 96
capacitor pack 65
capacitor pack cabling 99, 114
capacitor pack holder 66
Care Pack 81
cautions 27
clearing NVRAM 92
CMOS 92
components, front panel 84
components, rear panel 88
components, system board 19, 91
customer self repair (CSR) 6

D

DC power supply 121
diagnostic tools 81, 83
dimensions and weight 118
DIMM slot locations 92
DIMMs, removing 48
documentation feedback 127
drive cabling 99
drive LEDs 95
drive numbering 93
drives 34
drives, determining status of 93, 95

E

electrostatic discharge 27
environmental specifications 118
error messages 80
expansion boards 58
extending server from rack 30

F

fan blank 43
fan board 47
fan cage 46
fan module location 98
fan population guidelines 43
FBWC cabling 99
FBWC module 64
FBWC module LEDs 96
flash-backed write cache procedures 67
front panel cabling 99
front panel components 84
front panel LEDs 87
front panel/drive cage assembly 42

G

GPU power cabling 115
GPU retaining bracket 57
grounding methods 27
grounding requirements 27

H

health driver 83
health LED 87
heatsink 50
heatsink blank 49
hot-plug fans 32, 43
hot-plug power supply calculations 123
HPE Insight Diagnostics 81
HPE Insight Diagnostics survey functionality 81
HPE Insight Online 81
HPE Insight Remote Support software 81
HPE Smart Array SAS License Key 69, 91
HPE Systems Insight Manager (SIM) 81, 82
HPE Technical Support 6
humidity 118

I

illustrated parts catalog 16
iLO connector 88
Insight Diagnostics 81
Integrated Lights-Out (iLO) 82
Integrated Management Log (IML) 82
internal USB connector 91

L

LED, health 87

LED, system power 87
LEDs, drive 95
LEDs, FBWC module 96
LEDs, front panel 87
LEDs, NIC 87
LEDs, power supply 87, 88
LEDs, rear panel 90
LEDs, unit identification (UID) 87
legacy USB support 82

M

management tools 81
mechanical components 16
mechanical specifications 118
memory dump 93
Mini-SAS cabling 99
Mini-SAS Y-cabling 99, 102, 104, 106, 109, 110

N

NIC connectors 88
NMI functionality 93
NMI header 91, 93

O

operating system crash 83, 93
operating systems supported 81
optical drive 37
optical drive blank 37
optical drive bracket 38
optical drive cabling 115

P

PCI riser board 60
PCI riser board slot definitions 90
PCI riser cage 56
POST error messages 80
power calculator 123
power supply 35, 123
power supply air baffle 61
power supply blank 35
power supply LEDs 90
power supply specifications 118, 119, 120, 121, 122, 123
powering down 30
power-on password 92
processors 52
Product ID 75

Q

QuickSpecs 81

R

rack warnings 28
rear drive cage 62
rear LFF drive cage blank 78
rear panel components 88
rear panel LEDs 90
rear panel, accessing 32
recovering the data from the cache 67
redundant fan 43
re-entering the server serial number 75
remote support and analysis tools 81
removal and replacement procedures 27
removing server from rack 33
required tools 27
requirements, environmental 118
ROM-Based Setup Utility (RBSU) 82

S

safety considerations 27
SD card slot 91
secondary PCI riser cage blank 77
security bezel, removing 30
serial number 75, 84
serial number/iLO information pull tab 84
server specifications 118
server warnings and cautions 28
specifications, environmental 118
specifications, server 118
static electricity 27
symbols on equipment 27
system board assembly 69
system board battery 68
system board components 91
system components 19, 84
system configuration settings 92
system maintenance switch 92

T

technical support 6
temperature requirements 118
TPM connector 91
troubleshooting resources 80, 81, 84, 99, 118
Trusted Platform Module (TPM) 79

U

UID button 87
UID LED 87, 90
unit identification (UID) 87
USB connector 84
USB support 82, 83

V

video connector 88

W

warnings 28

warranty information 6
weight 118