Have feedback on QuickSpecs? We're listening

HPE ProLiant DL320 Gen11 QuickSpecs

Are you looking to run edge AI workloads like computer vision that need GPU accelerators? Or do you need distributed data solutions that require expandable storage?

The HPE ProLiant DL320 Gen11 is a 1U 1P server with a unique compact and workload-driven modular design that is purpose-built for edge computing, delivering exceptional performance at 1P economics and an excellent choice for both virtualized and containerized workloads.

Overview

HPE ProLiant DL320 Gen11

The HPE ProLiant DL320 Gen11 is powered by 4th and 5th Gen Intel® Xeon® Scalable Processors with up to 60 cores and 270W, increased memory capability (up to 2 TB 5200 MT/s), and high-speed PCIe Gen5 supporting up to four single-wide GPUs (or two double-wide), the HPE ProLiant DL320 Gen11 server is a perfect low-cost, 1U 1P, performance solution. The HPE ProLiant Gen11 servers are engineered to optimize IT at the edge with a cloud operating experience, built-in security, and optimized performance for workloads to drive your business forward.

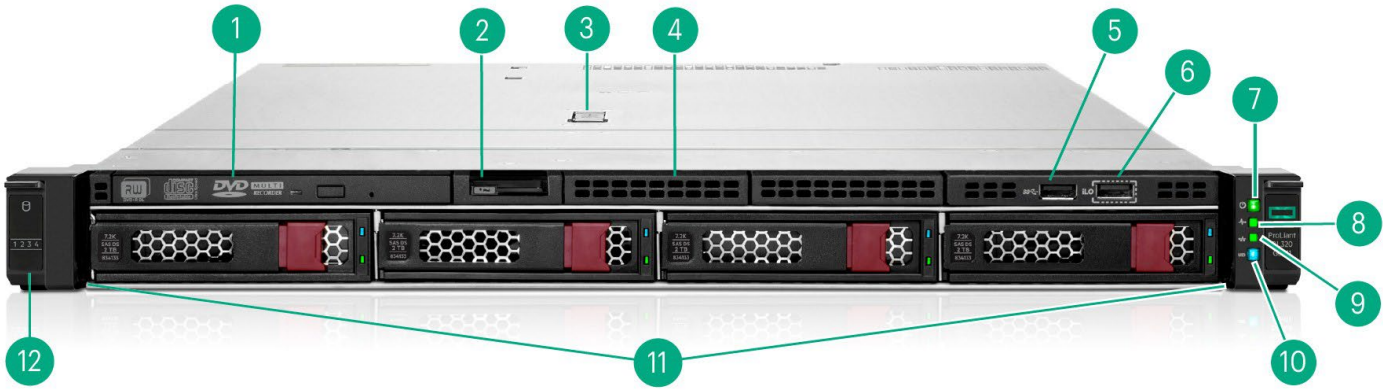

4 LFF Front View – 4 LFF + optional Optical Drive and SAS drives shown

Item	Description	Item	Description
1.	Optical Drive (optional - shown)	7.	Power On / Standby button and system power LED
2.	Serial number/iLO information pull tab	8.	Health LED
3.	Quick removal access panel	9.	NIC Status[1]
4.	Option DisplayPort & USB 2.0 port bundle kit (blank shown)	10.	Unit ID Button/LED
		11.	SAS/SATA drive bays
5.	USB 3.2 Gen1 Port	12.	Drive support label
6.	iLO Service Port		

Notes: [1] Front NIC LED display doesn't support NIC LED ACT/LINK indication from ALOM/PCIe/FLOM NICs

Overview

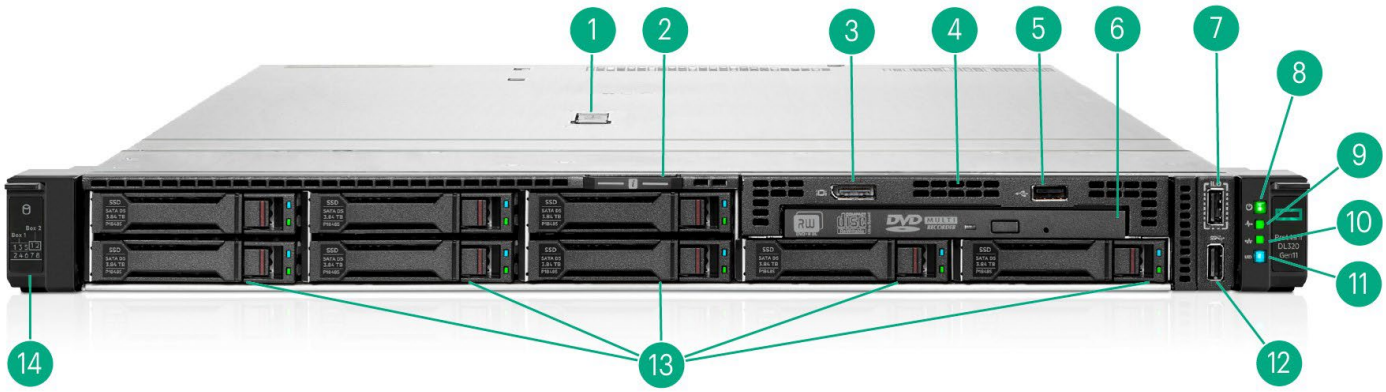

8SFF Front View - 8 SFF + optional Universal Media Bay, optical Drive, DisplayPort, USB 2.0, and SATA Drive shown

Item	Description	Item	Description
1.	Quick removal access panel	9.	Health LED
2.	Serial number/iLO information pull tab	10.	NIC Status[1]
3.	DisplayPort (optional – shown)	11.	Unit ID Button/LED
4.	Universal Media Bay (optional):	12.	USB 3.2 Gen1 Port
	– Option 1: Optical drive bay + DisplayPort & USB 2.0 port kit (shown)	13.	Drive bays; backplanes options
	– Option 2: 2 SFF x4 Tri-Mode 24G U.3 BC Drive Cage		– Option 1: 8SFF x1 Tri-Mode 24G U.3 BC Backplane
5.	USB 3.2 Gen1 Port (optional – shown)		– Option 2: 8SFF x4 Tri-Mode 24G U.3 BC Backplane
6.	Optical Drive (optional– shown)		
7.	iLO Service Port	14.	Drive support label
8.	Power On / Standby button and system power LED		

Notes: [1] Front NIC LED display doesn't support NIC LED ACT/LINK indication from ALOM/PCIe/FLOM NICs

Overview

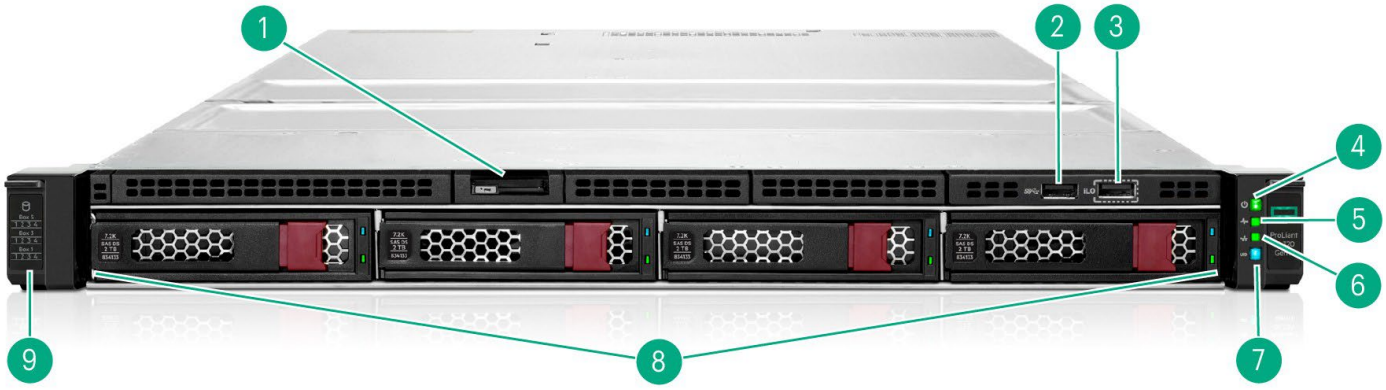

12 LFF Front View - 12 LFF + SAS drives shown

Item	Description	Item	Description
1.	Serial number/iLO information pull tab	6.	NIC Status[1]
2.	USB 3.2 Gen1 Port	7.	Unit ID Button/LED
3.	iLO Service Port	8.	SAS/SATA drive bays
4.	Power On/Standby button and system power LED	9.	Drive support label
5.	Health LED		

Notes: [1] Front NIC LED display doesn't support NIC LED ACT/LINK indication from ALOM/PCIe/FLOM NICs

Overview

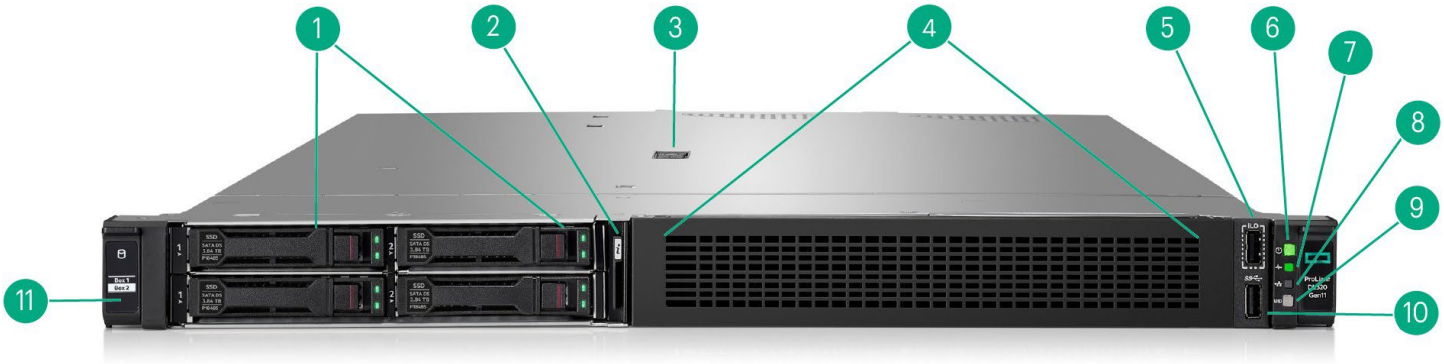

Front View – GPU CTO Server

Item	Description	Item	Description
1.	Drive Bays	6.	Power On/Standby button and system power LED
	– Option 1: 4SFF SAS/SATA/NVMe (Shown)	7.	Health LED
	– Option 2: 8EDSFF E3.s 1T	8.	NIC Status
2.	Serial number/iLO information pull tab	9.	Unit ID Button/LED
3.	Quick removal access panel	10.	USB 3.2 Gen1 Port
4.	GPU Front Cage	11.	Drive support label
5.	iLO Service Port		

Overview

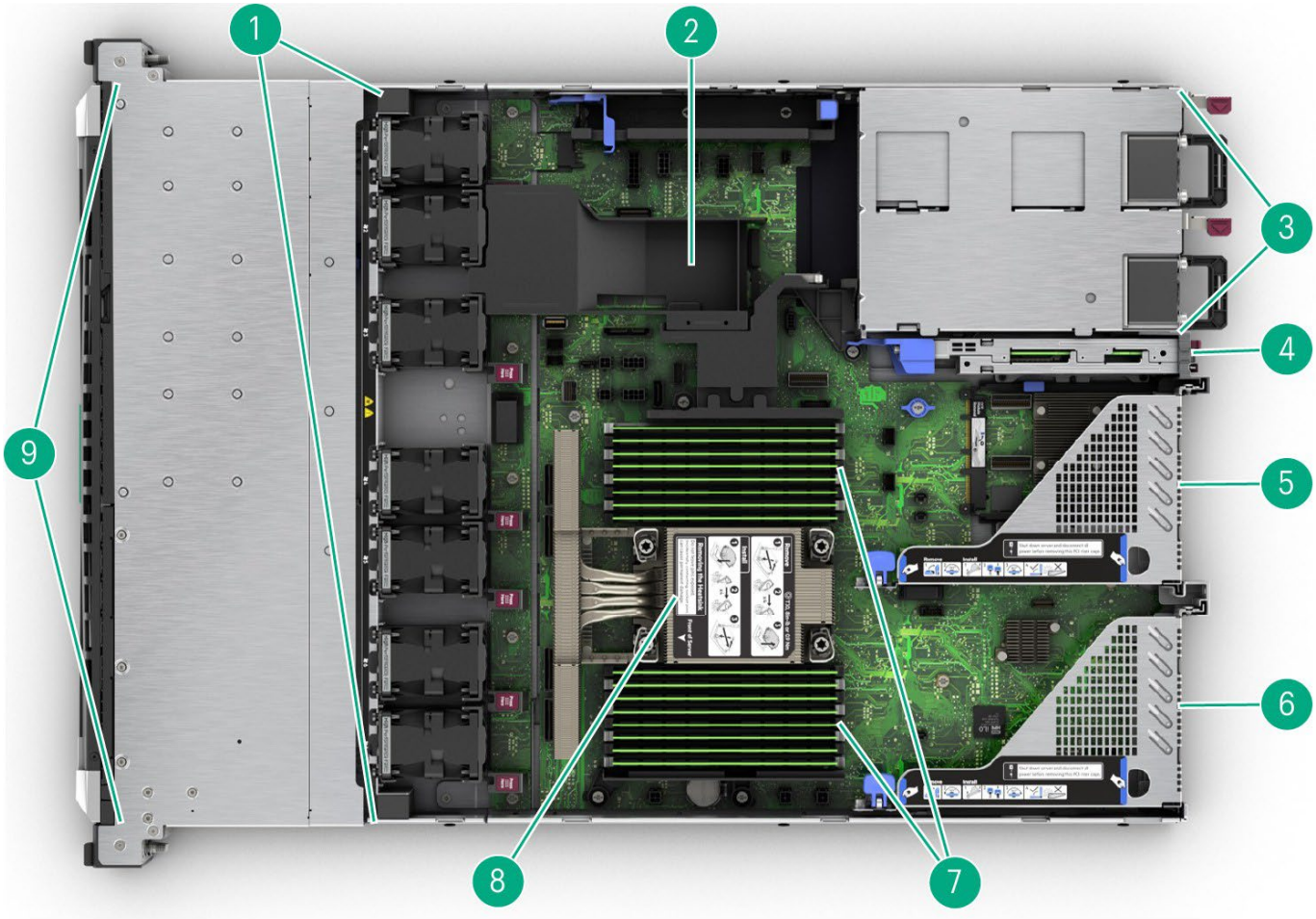

Internal View – Standard for all DL320 Gen11

Item	Description	Item	Description
1.	Up to 7 Hot Plug Fans	5.	Slot-2 PCIe 5 x16 FHHL (Secondary Riser)
2.	Two (2) M.2 module connectors (under the air baffle- not	6.	Slot-1 PCIe 5 x16 FHHL (Primary Riser)
	visible)	7.	16 DDR5 DIMM slots (shown)
3.	Redundant Power Supply (1 & 2 as shown)	8.	Heat Sink
4.	HPE NS204i-u NVMe Hot Plug Boot Optimized Storage	9.	Drive Cage
	Device (optional – shown)		

Notes: 1x Internal USB 3.0 port is not marked.

Overview

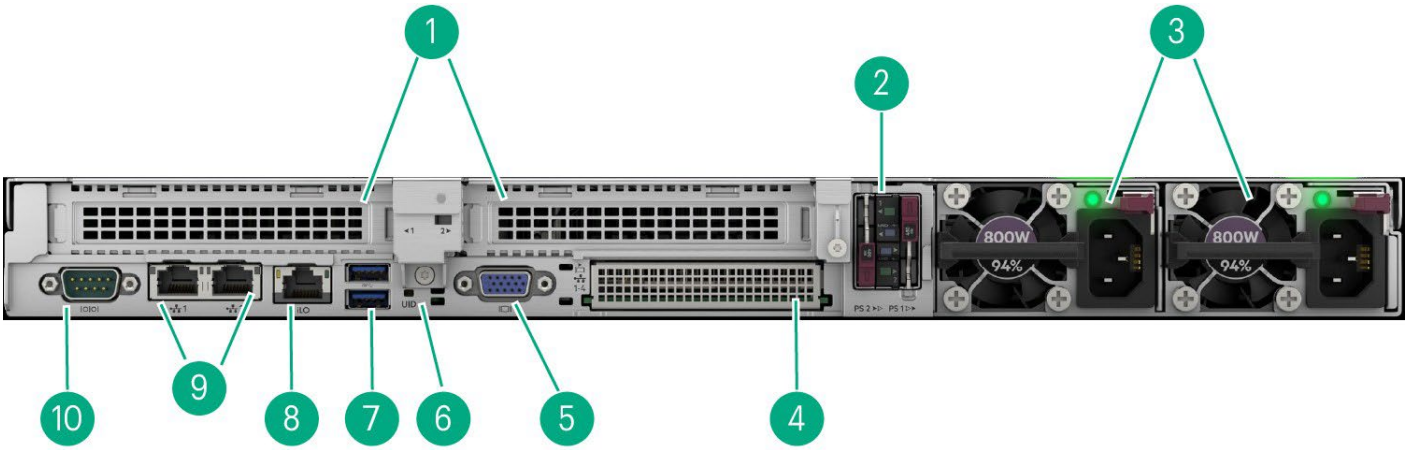

Rear View – Standard for all DL320 Gen11

Item	Description	Item	Description
1.	Slot-1 & 2 PCIe 5 x16 FHHL (Primary and Secondary Riser)	6.	UID Indicator LED
2.	HPE NS204i-u NVMe Hot Plug Boot Optimized Storage Device (optional – shown)	7.	Two (2) USB 3.2 Gen1 ports
3.	Hot-plug Power Supply 1 and 2 (1 +1 Redundancy)	8.	Dedicated iLO management port
4.	OCP 3.0 Slot: x16 PCIe 5.0	9.	Embedded 1GbE x2 network port
5.	Video (VGA) port	10.	Serial port (optional)

Platform Information

Form Factor

- 1U rack.

Chassis Types

- 4 LFF (P52765-B21) with optional Optical Disk Drive (use cable P54641-B21), optional DisplayPort/USB Kit (P48928-B21).
- 8+2 SFF SAS/SATA/NVMe (P52766-B21).
  - Option1: HPE ProLiant DL320 Gen11 8SFF x1 Tri-Mode 24G U.3 BC Backplane Kit (P52743-B21).
  - Option2: HPE ProLiant DL320 Gen11 8SFF x4 Tri-Mode 24G U.3 BC Backplane Kit (P52747-B21).
- 12 LFF (P52767-B21).
- GPU Dense (P61218-B21).
  - Option1: HPE ProLiant DL320 Gen11 8EDSFF x4 NVMe Drive Cage Kit (P61219-B21).
  - Option2: HPE ProLiant DL320 Gen11 4SFF x4 Tri-Mode 24G U.3 BC Drive Cage Kit (P61221-B21).

System Fans

- HPE ProLiant DL3X0 Gen11 1U Standard Fan Kit (P48907-B21), includes five fans.
- HPE ProLiant DL3X0 Gen11 1U High Performance Fan Kit (P48908-B21), includes seven fans.
- HPE ProLiant DL3X0 Gen11 1U 2P Standard Fan Kit (P54697-B21), includes two fans.

Notes: Generally, the High-Performance fan kit is required when >185W Processors SKUs, High-Performance NVMe drives, or certain backplanes are populated. See notes under each option category or each individual option for specifics.

Standard Features

Processors – One of the following.

The 2nd digit of the processor model number "x4xx" is used to denote the processor generation (i.e., 4=4th generation Intel® Scalable Series Processors).

For more information regarding Intel® Xeon® processors, please see the following http://www.intel.com/xeon.

This table covers the public Intel® offering only.

Processor Suffix	Description	Offering
H	DB and Analytics	Highest core counts. Database and Analytics usages benefit from DSA and IAA accelerators.
M	Media Transcode	Optimized around AVX frequencies to deliver better performance/watt around Media, AI, and HPC workloads.
N	Network/5G/Edge (High TPT / Low Latency)	Designed for NFV and networking workloads, such as L3 forwarding, 5G UPF, OVS DPDK, VPP FIB router, VPP IPsec, web server/NGINX, vEPC, vBNG, and vCMTS.
S	Storage and HCI	Optimized for Storage UMA use cases with increased UPI Bandwidth for vs. Mainline SKUs.
P	Cloud - IAAS	Designed for cloud IaaS environments to deliver higher frequencies at constrained TDPs.
Q	Liquid Cooling	Liquid-cooled processors with higher frequency and performance at the same TDP.
U	1 Socket Optimized	Optimized for targeted platforms adequately served by the cores, memory bandwidth, and IO capacity available from a single processor.
V	Cloud - SAAS	Optimized for orchestration efficiency that delivers higher core counts and VMs per rack.
Y	Speed Select	Intel® SST-PP increases the base frequency when fewer cores are enabled. Allows greater flexibility, deployment options, and platform longevity.

Notes:

- Covers the Intel® public offering only.
- New Built-in Accelerators.
- 1 to 8 socket support.
- Intel® Data Streaming Accelerator (DSA).
- Intel® Dynamic Load Balancer (DLB).
- Intel® Quick Assist Technology (QAT).
- Intel® In-Memory Analytics Accelerator (IAA).
- Increased memory bandwidth with 8 channels DDR5, up to 4800 MT/s, 4.0TB maximum RAM per socket.
- Increased I/O bandwidth up to 80 PCIe 5.0 lanes per socket, and new Compute Express Link (CXL).
- Built-in AI Acceleration: Intel® Advanced Matrix Extension (AMX).
- Hardware-enhanced Security: Enhanced Intel® Software Guard Extensions (SGX) – with new cryptographic memory integrity.
- Increased Multi-Socket Bandwidth with new UPI2.0 (up to 16GT/s) with maximum 4 UPI Links.

Standard Features

- New FlexBus I/O Interface PCIe 5.0 + CXL.
- [1] The 4th Generation Intel® Xeon® Scalable Processors are featured with Intel® Speed Select Technology (SST) for Infrastructure as as Service, Networking and Virtualized environments workloads. The SST includes:
    - SST- Performance Profile
    - SST- Base Frequency
    - SST- Core Power
    - SST- Turbo Frequency
- Default setting in ROM-Based Step Utility (RBSU) as shown.

Intel® SST Features	RBSU Options	Granular Control over CPU Performance	Default Setting
SST- Performance Profile	Dynamic Intel® Speed Select Technology – Performance Profile	Allows the CPU to run in one of three performance profiles	CPU hardware-based. Enabled by default
SST-Base Frequency	Intel® Speed Select Technology – Base Frequency	Enables some CPU cores to run at a higher base frequency in return for other cores running at a lower base frequency	Disabled by default
SST-Core Power	Intel® Speed Select Technology – Core Power	Allows software to prioritize which cores will receive excess power.	Disabled by default
Intel® SST Turbo Frequency	Intel® Turbo Boost Technology	Allows software-selected cores to achieve a higher max turbo frequency by reducing other cores' max turbo frequency	Enabled by default

5th Generation Intel® Xeon® Scalable Processor Family (Platinum)								
Intel® Xeon® Models	**Base Speed**	**Cores**	**L3 Cache**	**Power**	**UPI Links**	**DDR5**	**SGX Enclave Size**	**Die**
Platinum 8581V Processor	2.0 GHz	60	300 MB	270 W	0	4800 (MT/s)	128 GB	XCC

Notes:

- Processors with TDP greater than 185W require High Performance Heatsink (P52756-B21) and High-Performance Fan Kit (P48908-B21).
- Intel® Speed Select enabled processors: 8581V.

Standard Features

5th Generation Intel® Xeon® Scalable Processor Family (Gold 6)								
Intel® Xeon® Models	**Base Speed**	**Cores**	**L3 Cache**	**Power**	**UPI Links**	**DDR5**	**SGX Enclave Size**	**Die**
Gold 6526Y Processor	2.8 GHz	16	37.5 MB	195W	3	5200 MT/s	128 GB	MCC
Gold 6530 Processor	2.1 GHz	32	160 MB	270W	3	4800 MT/s	128 GB	XCC
Gold 6534 Processor	3.9 GHz	8	22.5 MB	195W	3	4800 MT/s	128 GB	MCC
Gold 6538N Processor	2.1 GHz	32	60.0 MB	205W	3	5200 MT/s	128 GB	MCC
Gold 6538Y+ Processor	2.2 GHz	32	60.0 MB	225W	3	5200 MT/s	128 GB	MCC
Gold 6542Y Processor	2.9 GHz	24	60.0 MB	250W	3	5200 MT/s	128 GB	MCC
Gold 6544Y Processor	3.6 GHz	16	45.0 MB	270W	3	5200 MT/s	128 GB	MCC
Gold 6548N Processor	2.8 GHz	32	60.0 MB	250W	3	5200 MT/s	128 GB	MCC
Gold 6548Y+ Processor	2.5 GHz	32	60.0 MB	250W	3	5200 MT/s	128 GB	MCC
Gold 6554S Processor	2.2 GHz	36	180 MB	270W	4	5200 MT/s	128 GB	XCC

Notes:

- Processors with a TDP greater than 185W require High Performance Heatsink (P52756-B21) and High-Performance Fan Kit (P48908-B21).
- Intel® Speed Select enabled processors: 6526Y, 6538N, 6538Y+, 6542Y, 6544Y, 6548N, 6548Y+ and 6554S.

5th Generation Intel® Xeon® Scalable Processor Family (Gold 5)								
Intel® Xeon® Models	**Base Speed**	**Cores**	**L3 Cache**	**Power**	**UPI Links**	**DDR5**	**SGX Enclave Size**	**Die**
Gold 5512U Processor	2.1 GHz	28	52.5 MB	185 W	0	4800 MT/s	128 GB	MCC
Gold 5515+ Processor	3.2 GHz	8	22.5 MB	165 W	3	4800 MT/s	128 GB	MCC
Gold 5520+ Processor	2.2 GHz	28	52.5 MB	205 W	3	4800 MT/s	128 GB	MCC

Notes:

- Processors with TDP greater than 185W require High Performance Heatsink (P52756-B21) and High-Performance Fan Kit (P48908-B21).
- Intel® Speed Select enabled processors: NA.

5th Generation Intel® Xeon® Scalable Processor Family (Silver)								
Intel® Xeon® Models	**Base Speed**	**Cores**	**L3 Cache**	**Power**	**UPI Links**	**DDR5**	**SGX Enclave Size**	**Die**
Silver 4509Y Processor	2.6 GHz	8	22.5 MB	125W	2	4400 MT/s	64 GB	EE LCC
Silver 4510 Processor	2.4 GHz	12	30.0 MB	150W	2	4000 MT/s	64 GB	EE LCC
Silver 4514Y Processor	2.0 GHz	16	30.0 MB	150W	2	4400 MT/s	64 GB	MCC
Silver 4516Y+ Processor	2.2 GHz	24	45.0 MB	185W	2	4400 MT/s	64 GB	MCC

Notes: Intel® Speed Select enabled processors: 4509Y, 4514Y and 4516Y+.

Standard Features

5th Generation Intel® Xeon® Scalable Processor Family (Bronze)								
Intel® Xeon® Models	**Base Speed**	**Cores**	**L3 Cache**	**Power**	**UPI Links**	**DDR5**	**SGX Enclave Size**	**Die**
Bronze 3508U Processor[1]	2.1 GHz	8	22.5 MB	125W	N/A	4400 MT/s	64 GB	EE LCC

Notes:

- Intel® Speed Select enabled processors: N.A.
- PCIe 4.0 only.

4th Generation Intel® Xeon® Scalable Processor Family (Gold)								
Intel® Xeon® Models	**Base Speed**	**Cores**	**L3 Cache**	**Power**	**UPI Links**	**DDR5**	**SGX Enclave Size**	**Die**
Gold 6426Y Processor	2.5 GHz	16	37.5 MB	185 W	3	4800 MT/s	128 GB	MCC
Gold 6442Y Processor	2.6 GHz	24	60 MB	225 W	3	4800 MT/s	128 GB	MCC
Gold 6448Y Processor	2.1 GHz	32	60 MB	225 W	3	4800 MT/s	128 GB	MCC
Gold 6434 Processor	3.7 GHz	8	22.5 MB	195 W	3	4800 MT/s	128 GB	MCC
Gold 6444Y Processor	3.6 GHz	16	45 MB	270 W	3	4800 MT/s	128 GB	MCC
Gold 6430 Processor	2.1 GHz	32	60 MB	270 W	3	4800 MT/s	128 GB	XCC
Gold 6438Y+ Processor	2.0 GHz	32	60 MB	205 W	3	4800 MT/s	128 GB	MCC
Gold 6414U Processor	2.0 GHz	32	60 MB	250 W	0	4800 MT/s	128 GB	XCC
Gold 6438N Processor	2.0 GHz	32	60 MB	205 W	3	4800 MT/s	128 GB	MCC
Gold 6421N Processor	1.8 GHz	32	60 MB	185 W	0	4400 MT/s	128 GB	MCC
Gold 6454S Processor	2.2 GHz	32	60 MB	270 W	4	4800 MT/s	128 GB	XCC
Gold 5415+ Processor	2.9 GHz	8	22.5 MB	150 W	3	4400 MT/s	128 GB	MCC
Gold 5418Y Processor	2.0 GHz	24	45 MB	185 W	3	4400 MT/s	128 GB	MCC
Gold 5420+ Processor	2.0 GHz	28	52.5 MB	205 W	3	4400 MT/s	128 GB	MCC
Gold 5412U Processor	2.1 GHz	24	45 MB	185 W	0	4400 MT/s	128 GB	MCC
Gold 5411N Processor	1.9 GHz	24	45 MB	165 W	0	4400 MT/s	128 GB	MCC
Gold 5418N Processor	1.8 GHz	24	45 MB	165 W	3	4000 MT/s	128 GB	MCC
Gold 5416S Processor	2.0 GHz	16	30 MB	150 W	3	4400 MT/s	128 GB	MCC

Notes:

- Processors with TDP greater than 185W require High Performance Heatsink (P52756-B21) and High-Performance Fan Kit (P48908-B21).
- 96 GB 4800 MT/s Memory cannot be selected if HBM or MCC die.

Standard Features

4th Generation Intel® Xeon® Scalable Processor Family (Silver)								
Intel® Xeon® Models	**Base Speed**	**Cores**	**L3 Cache**	**Power**	**UPI Links**	**DDR5**	**SGX Enclave Size**	**Die**
Silver 4410Y Processor	2.0 GHz	12	30 MB	150 W	2	4000 MT/s	128 GB	MCC
Silver 4416+ Processor	2.0 GHz	20	37.5 MB	165 W	2	4000 MT/s	128 GB	MCC

Notes: 96 GB 4800 MT/s Memory cannot be selected if HBM or MCC die.

4th Generation Intel® Xeon® Scalable Processor Family (Bronze)								
Intel® Xeon® Models	**Base Speed**	**Cores**	**L3 Cache**	**Power**	**UPI Links**	**DDR5**	**SGX Enclave Size**	**Die**
Bronze 3408U Processor	1.8 GHz	8	22.5 MB	125 W	0	4000 MT/s	64 GB	MCC

Notes: 96 GB 4800 MT/s Memory cannot be selected if HBM or MCC die.

Chipset

Intel® C741 Chipset

Notes: For more information regarding Intel® chipsets, please see the following URL:
https://www.intel.com/content/www/us/en/products/chipsets/server-chipsets.html

System Management Chipset

HPE iLO 6 ASIC

Notes: Read and learn more in the iLO QuickSpecs.

Memory

Type	HPE DDR5 Smart Memory Registered (RDIMM)
DIMM Slots Available	16 DIMM Slots, 8 channels, 2 DIMMs per channel
Maximum capacity (RDIMM)	2.04 TB 16 x 128 GB RDIMM @ 4800 MT/s

Notes:

- All processors support up to 2 TB memory.
- The maximum memory speed is limited by the processor selection.
- To realize the performance memory capabilities listed in this document, HPE DDR5 Smart Memory is required.
- The -B21 memory SKUs shown in this document are to be used when ordering stand-alone memory only. For each -B21 SKU, there is a corresponding -F21 SKU which is to be used when configuring servers with integrated memory DIMMs.
- For additional information, please visit the HPE Memory QuickSpecs and Technical White Papers or HPE DDR5 Smart Memory QuickSpecs.

Memory Protection

Advanced ECC

Advanced ECC uses device data correction to detect and correct single-bit and all multi-bit errors within a single DRAM chip.

Online Spare

Memory online spare mode detects a degrading rank and switches operation to the spare rank.

Notes: For more information, see our Memory RAS feature technical whitepaper.

Network Controller

The HPE ProLiant DL320 Gen11 server offers the customer Embedded Broadcom BCM5720 Ethernet 1Gb 2-port BASE-T Adapter standard with the option to upgrade with a variety of networking options.

Notes: Support document and downloads including firmware and drivers for the Broadcom BCM5720 Ethernet 1Gb 2-port BASET LOM Adapter can be downloaded from the supplier's support and services webpage.

PCIe Expansion Slots

Expansion Slots #	Technology	Bus Width	Connector Width	Slot Form Factor
1 (Primary Riser)	PCIe 5.0	x16	x16	FHHL
2 (Secondary Riser)	PCIe 5.0	x16	x16	FHHL

Notes: Slot-1, by default, is with the riser.

OCP Expansion Slots

Expansion Slots #	Technology	Bus Width	Connector Width
1 (OCP 3.0) with Wake on LAN (WoL) and iLO sideband (shared NIC) capability	PCIe 5.0	x16	x16

Internal Storage Devices

- **Optical Drive**
  Available on 8 SFF and 4 LFF CTO Servers as an option (DVD-ROM or DVD-RW).
- **Hard Drives**
  None are shipped as standard.

Graphics

Integrated Video Standard

- Video modes up to 1920 x 1200@60Hz (32 bpp).
- 16MB Video Memory.

Maximum Storage

Storage	Capacity	Configuration
Hot Plug LFF SAS HDD	80.0 TB (4 x 20 TB)	HPE ProLiant DL320 Gen11 4 LFF CTO Server (P52765-B21)
Hot Plug LFF SATA HDD	80.0 TB (4 x 20 TB)	
Hot Plug LFF SAS SSD	30.72 TB (4 x 7.68 TB)	
Hot Plug LFF SATA SSD	30.72 TB (4 x 7.68 TB)	
Hot Plug SFF SAS HDD	24.0 TB (8+2 x 2.4 TB)	HPE ProLiant DL320 Gen11 8 SFF CTO Server with optional 2 SFF cage on UMB (P52766-B21)
Hot Plug SFF SATA HDD	20.0 TB (8+2 x 2.0 TB)	
Hot Plug SFF SAS SSD	153.0 TB (8+2 x 15.3 TB)	
Hot Plug SFF SATA SSD	76.8 TB (8+2 x 7.68 TB)	
Hot Plug LFF SAS HDD	240.0 TB (12 x 20 TB)	HPE ProLiant DL320 Gen11 12 LFF CTO Server (P52767-B21)
Hot Plug LFF SATA HDD	240.0 TB (12 x 20 TB)	
Hot Plug LFF SAS SSD	92.16 TB (12 x 7.68 TB)	
Hot Plug LFF SATA SSD	92.16 TB (12 x 7.68 TB)	
EDSFF NVMe SSD	61.44 TB (4 x 15.36 TB)	HPE DL320 Gen11 GPU CTO Server (P61218-B21) with 8EDSFF Drive Cage (P61219-B21)
Hot Plug SFF SAS HDD	9.6 TB (4 x 2.4 TB)	HPE DL320 Gen11 GPU CTO Server (P61218-B21) with 4SFF Drive Cage (P61221-B21)
Hot Plug SFF SATA HDD	8.0 TB (4 x 2.0 TB)	
Hot Plug SFF SAS SSD	61.2 TB (4 x 15.3 TB)	
Hot Plug SFF SATA SSD	30.72 TB (4 x 7.68 TB)	
Hot Plug SFF NVMe PCIe SSD	153.6 TB (8+2 x 15.36 TB)	
M.2 NVMe SSD	3.84 TB (2 x 1.92 TB)	On board with any of the available configurations
M.2 SATA SSD	960 GB (2x 480 GB)	

Storage Controllers

NVMe Boot Devices

- HPE NS204i-u NVMe Hot Plug Boot Optimized Storage Device (P48183-B21).
- HPE ProLiant DL320 Gen11 NS204i-u NVMe Boot Kit (P52786-B21).

Notes: NS204i-u Boot device includes 2x 480GB M.2 NVMe SSDs, with pre-configured hardware RAID1. For additional information, please see the HPE OS Boot Device QuickSpecs

Standard Features

Software RAID Controllers

The available Gen11 controllers are depicted below.

Intel® VROC SATA for HPE ProLiant Gen11

Notes:

- Embedded Intel® VROC SATA for HPE ProLiant Gen11, with 14 SATA ports (10-ports accessible).
- Intel® VROC for HPE ProLiant Gen11 is an enterprise, hybrid Software RAID solution specifically designed for
- SSDs.
- Intel® VROC is a software-based solution utilizing Intel® CPU to RAID or HBA direct connected drives.
- RAID Support- 0/1/5/10.
- Windows and Linux OS support.
- Host Tools- Windows GUI/CLI, Linux CLI.
- UEFI Support- HII Utility, OBSE.
- iLO Support- IML, Alert, SNMP, AHS.
- iLO Redfish- Redfish Read.
- Intel® VROC SATA for HPE ProLiant Gen11 will operate in UEFI mode only. For legacy support additional
- storage controller will be needed.
- Intel® VROC SATA is off by default and must be enabled.
- 8SFF: Separates 8SFF to two drive groups (BOX1 Bay1-4 and Bay5-8) with Intel® VROC SATA RAID configuration.
- 2SFF: 2SFF (BOX2 Bay1 and Bay-2) is one drive group with Intel® VROC SATA RAID configuration.
- 4LFF: 4LFF (BOX1 Bay1-4) is a one drive group with Intel® VROC SATA RAID configuration.
- 10LFF: Each LFF BOX cage is separated drive groups (BOX1, BOX3 & BOX5) with Intel® VROC SATA RAID configuration.
- Intel® VROC NVMe for HPE ProLiant Gen11.
- Intel® Virtual RAID on CPU (Intel® VROC) Premium FIO Software for HPE.
- Intel® Virtual RAID on CPU (Intel® VROC) Standard Software FIO for HPE.

In HPE ProLiant Gen11 servers, when secure boot is enabled, Intel® Virtual RAID on CPU (VROC) 8.0 Out-of-Band (OOB) management does not function with Linux kernel version 5.4 (or later). VROC OOB will not respond to any PLDM (over-MCTP-over-PCIe) requests from iLO (BMC). VROC Redfish resources will not function (e.g., Redfish actions); therefore, VROC over Redfish management is not available. This is due to a new security feature in Linux kernel version 5.4 (or later).

For more information, please visit the following Customer Advisory Document (ID: a00128934en_us) at HPE Support Center.

Notes:

- All models feature 4 x8 PCIe 5.0 connectors per socket for NVMe connectivity, provides support for up to 8 direct attach x4 NVMe bays.
- Only supported on SFF models.
- Intel® VROC for HPE ProLiant Gen11 is an enterprise, hybrid Software RAID solution specifically.
- designed for NVMe SSDs connected directly to the CPU. Intel® VROC is a software-based solution.
- utilizing Intel® CPU to RAID or HBA direct connected drives.
- Intel® Virtual RAID on CPU Standard for RAID 0/1/10 (S0E37A/S0E38AAE) or Premium SKU for RAID 0/1/5/10 (R7J57A/R7J59AAE) must be ordered to enable RAID support.
- Windows, Linux, VMware OS support.
- Host Tools- Windows GUI/CLI, Linux CLI.
- UEFI Support- HII Utility, OBSE.

Standard Features

- Active health monitoring of NVMe M.2 drives requires use of SMART tools.
- Intel® VROC NVMe for HPE ProLiant Gen11 will operate in UEFI mode only. For legacy support an additional Tri-Mode controller will be needed.
- For NVMe SSDs only, there is no PCIe card support.

Intel VROC for HPE ProLiant QuickSpecs

Essential RAID Controllers

- HPE Smart Array E208e-p SR Gen10 Controller

Performance RAID Controllers

- HPE MR216i-p Gen11 x16 Lanes without Cache PCI SPDM Plug-in Storage Controller.
- HPE MR216i-o Gen11 x16 Lanes without Cache OCP SPDM Storage Controller.
- HPE MR408i-o Gen11 x8 Lanes 4GB Cache OCP SPDM Storage Controller.
- HPE MR416i-o Gen11 x16 Lanes 8GB Cache OCP SPDM Storage Controller.
- HPE MR416i-p Gen11 x16 Lanes 8GB Cache PCI SPDM Plug-in Storage Controller.
- HPE SR932i-p Gen11 x32 Lanes 8GB Wide Cache PCI SPDM Plug-in Storage Controller[1,2].

Notes:

- [1]Requires x16 physical and electrical riser slot.
- [2]If second controller is required, you must select secondary FH riser. For additional details, please see:
  HPE Compute MR Gen11 Controllers QuickSpecs
  HPE Compute SR Gen11 Controllers QuickSpecs

Power Supply

- HPE 500W Flex Slot Platinum Hot Plug Low Halogen Power Supply Kit.
  Notes: Available with 94% efficiency.
- HPE 800W Flex Slot Platinum Hot Plug Low Halogen Power Supply Kit.
  Notes: Available with 94% efficiency.
- HPE 1000W Flex Slot Titanium Hot Plug Low Halogen Power Supply Kit.
  Notes: Available with 96% efficiency.
- HPE 1600W Flex Slot Platinum Hot Plug Low Halogen Power Supply Kit.
  Notes:
  - Available with 94% efficiency.
  - 1600W Power supplies only support high line voltage (200 VAC to 240 VAC).
- HPE 1800-2000W Flex Slot Titanium Hot Plug Low Halogen Power Supply Kit.
  Notes: Available with 96% efficiency.

HPE Flexible Slot (Flex Slot) Power Supplies share a common electrical and physical design that allows for hot plug, tool-less installation into HPE ProLiant Gen11 Performance Servers. Flex Slot power supplies are certified for high-efficiency operation and offer multiple power output options, allowing users to "right-size" a power supply for specific server configurations. This flexibility helps to reduce power waste, lower overall energy costs, and avoid "trapped" power capacity in the data center.

All pre-configured servers ship with a standard 6-foot IEC C-13/C-14 jumper cord (A0K02A). This jumper cord is also included with each standard AC power supply option kit. Please check the ProLiant Power Cables web page if a different power cord is required.

To review the power requirements for your selected system, please use the HPE Power Advisor Tool.

For information on power specifications and technical content, visit HPE Server power supplies.

European Union ErP Lot 9 Regulation

Beginning on January 1st, 2024, units sold into the European Union (EU), European Economic Area (EEA), the United Kingdom, Ireland, Switzerland or Turkey, must include more efficient AC power supplies: 94% for multi-output and 96% for single-output. HPE Flexible Slot power supplies are single-output, and part numbers 865438-B21, P03178-B21, and P44712-B21 are 96% efficient, thus meeting requirements.
HPE is on target to fulfill compliant systems ahead of time and will begin enforcing these requirements in advance to satisfy requests with the current power supplies by the set deadline.

Interfaces	
Serial	1 port - Optional
Video	1 Front - DisplayPort (optional) 1 Rear - VGA port (standard on all models) **Notes:** If both ports are used simultaneously, they will display the same image.
Network Ports	None. Choice of OCP or standup card, supporting a wide array of NIC adapters
HPE iLO Remote Mgmt Port	1 GbE Dedicated
Front iLO Service Port	1 standard
USB	4 standard on all models: 1 front(USB 3.2 Gen1), 2 rear (USB 3.2 Gen1), 1 internal (USB 2.0) +1 optional USB 2.0 front in 4LFF & 8SFF **Notes:** USB 3.2 Gen1 is referred to as USB 3.0 in some marketing documents.

Operating Systems and Virtualization Software Support for HPE Servers

HPE servers are designed for seamless integration with partner Operating Systems and Virtualization Software. By collaborating closely with our partners, we ensure that their products are optimized, certified, and fully supported within your HPE server environment.
Access the certified and supported servers for each of the OS and Virtualization software: HPE Servers Support & Certification Matrices

HPE Server UEFI/Legacy ROM

Unified Extensible Firmware Interface (UEFI) is an industry-standard that provides better manageability and more secured configuration than the legacy ROM while interacting with your server at boot time. HPE ProLiant Gen11 servers have a UEFI Class 3 implementation to support UEFI Mode.

Notes: The UEFI System Utilities tool is analogous to the HPE ROM-Based Setup Utility (RBSU) of legacy BIOS. For more information, please visit http://www.hpe.com/servers/uefi.

UEFI enables numerous new capabilities specific to HPE ProLiant servers, such as:

- Secure Boot and Secure Start enabled for enhanced security.
- Embedded UEFI Shell.
- Operating system-specific functionality.
- Mass Configuration Deployment Tool using iLO RESTful API that is Redfish API Conformant.
- Support for > 2.2 TB (using GPT) boot drives.
- PXE boot support for IPv6 networks.
- USB 3.0 Stack.
- Workload Profiles for simple performance optimization.

UEFI Boot Mode only:

- TPM 2.0 Support.
- iSCSI Software Initiator Support.
- NVMe Boot Support.
- HTTP/HTTPs Boot support as a PXE alternative.
- Platform Trust Technology (PTT) can be enabled.
- Boot support for option cards that only support a UEFI option ROM.

Notes:

- Enabling TPM 2.0 no longer requires TPM module option kit for Gen11. It is an embedded feature.
- For UEFI Boot Mode, the boot environment and OS image installations should be configured properly to support UEFI.

Industry Standard Compliance

- ACPI 6.3 Compliant.
- PCIe 5.0 Compliant.
- Wake on LAN (WoL) Support.
- Microsoft® Logo certifications.
- PXE Support.
- VGA.
- DisplayPort.
  Notes: This support is on the optional Universal Media Bay.
- USB 3.2 Gen1 Compliant.
- USB 2.0 Compliant (via Universal Media Bay).
  Notes: This support is on the optional Universal Media Bay.
- ENERGY STAR® 4.0.
- SMBIOS 3.2.
- Redfish API.
- IPMI 2.0.

Standard Features

- Secure Digital 4.0.
- Embedded TPM 2.0 Support.
  Notes: Enabling TPM 2.0 no longer requires TPM module option kit for Gen11 since it is an embedded feature. TPM is disabled on shipments to China.
- Advanced Encryption Standard (AES).
- Triple Data Encryption Standard (3DES).
- SNMP v3.
- TLS 1.2.
- DMTF Systems Management Architecture for Server Hardware Command Line Protocol (SMASH CLP).
- Active Directory v1.0.
- ASHRAE A3/A4.
  Notes: For additional technical and thermal details regarding ambient temperature, humidity, and feature support, please visit https://www.hpe.com/support/ASHRAEGen11
- UEFI (Unified Extensible Firmware Interface Forum) 2.7.

Embedded Management

HPE Integrated Lights-Out (HPE iLO)
Monitor your servers for ongoing management, service alerting, reporting, and remote management with HPE iLO. Learn more at http://www.hpe.com/info/ilo.

UEFI
Configure and boot your servers securely with industry-standard Unified Extensible Firmware Interface (UEFI). Learn more at http://www.hpe.com/servers/uefi.

Intelligent Provisioning
Hassle-free server and OS provisioning for one or more servers with Intelligent Provisioning.

Learn more at http://www.hpe.com/servers/intelligentprovisioning.

iLO RESTful API
iLO RESTful API is Redfish API conformance and offers simplified server management automation, such as configuration and maintenance tasks based on modern industry standards. Learn more at http://www.hpe.com/info/restfulapi.

OpenBMC Support
OpenBMC Capable through iLO6 Transfer of Ownership Process.
Learn more at OpenBMC Support

Server Utilities

Active Health System

The HPE Active Health System (AHS) is an essential component of the iLO management portfolio that provides continuous, proactive health monitoring of HPE servers. Learn more at http://www.hpe.com/servers/ahs.

Smart Update

Keep your servers up to date with the HPE Smart Update solution by using Smart Update Manager (SUM) to optimize the firmware and driver updates of the Service Pack for ProLiant (SPP).
Learn more at https://www.hpe.com/us/en/servers/smart-update.html.

iLO Amplifier Pack

Designed for large enterprise and service provider environments with hundreds of HPE servers, the iLO Amplifier Pack is a free, downloadable open virtual application (OVA) that delivers the power to discover, inventory, and update Gen8, Gen9, Gen10, and Gen10 Plus HPE servers at unmatched speed and scale. Use an iLO Advanced License to unlock full capabilities.
Learn more at http://www.hpe.com/servers/iLOamplifierpack.

RESTful Interface Tool

RESTful Interface tool (iLOREST) is a single scripting tool to provision using iLO RESTful API to discover and deploy servers at scale. Learn more at http://www.hpe.com/info/resttool.

Scripting Tools

Provision one too many servers, using your scripts to discover and deploy with Scripting Tool (STK) for Windows and Linux or Scripting Tools for Windows PowerShell. Learn more at http://www.hpe.com/servers/powershell.

HPE OneView Standard

HPE OneView is an on-premises, multi-generational server monitoring and management solution. HPE OneView Standard can be used for inventory, health monitoring, alerting, and reporting without additional fees. Customers can upgrade their management experience with an HPE OneView Advanced license, all provided by the same tool. Learn more at http://www.hpe.com/info/oneview.

HPE Compute Ops Management

Transform compute lifecycle management with a cloud experience that delivers greater simplicity, agility, and speed across your entire server environment, wherever it lives. This software-as-a-service tool provides a dashboard with global visibility and intuitive management of server health, security and compliance status to help you easily identify areas that need immediate attention. Users can update tens to thousands of servers faster through intelligent delta-based firmware downloads and on-demand HPE iLO firmware updates.

HPE Compute Ops Management is cloud-native software that is continually updated with new services, features, patches, and firmware packs. The management application resides in GreenLake cloud (access via https://common.cloud.hpe.com) and leverages the GreenLake architecture, security, and unified operations.
A 3-year subscription to HPE Compute Ops Management is added by default when ordering an HPE ProLiant Gen11 rack, tower, or micro server.
For more information, visit the HPE Compute Ops Management QuickSpecs:
https://www.hpe.com/psnow/doc/a50004263enw

Security

- UEFI Secure Boot and Secure Start support.
- Tamper-free updates – components digitally signed and verified.
- Immutable Silicon Root of Trust.
- Ability to rollback firmware.
- FIPS 140-2 validation.
- Secure erase of NAND/User data.
- Common Criteria certification.
- Configurable for PCI DSS compliance.
- Embedded TPM (Trusted Platform Module) 2.0. Disabled on shipments to China.
- Advanced Encryption Standard (AES) and Triple Data Encryption Standard (3DES) on browser.
- Bezel Locking Kit option.
- Support for Commercial National Security Algorithms (CNSA).
- Chassis Intrusion detection option.
- Secure Recovery – recover critical firmware to a known good state on detection of compromised firmware.

Warranty

This product is covered by a global limited warranty and supported by HPE Services and a worldwide network of Hewlett Packard Enterprise Authorized Channel Partners resellers. Hardware diagnostic support and repair are available for three years from the date of purchase. Support for software and initial setup is available for 90 days from the date of purchase. Enhancements to warranty services are available through HPE Services operational services or customized service agreements. Hard drives have either a one-year or three-year warranty; refer to the specific hard drive QuickSpecs for details.

Notes: Server Warranty includes 3-Year Parts, 3-Year Labor, and 3-Year Onsite support with next business day response. Warranty repairs may be completed through the use of Customer Self Repair (CSR) parts. These parts fall into two categories: 1) Mandatory CSR parts are designed for easy replacement. A travel and labor charge will result when customers decline to replace a Mandatory CSR part; 2) Optional CSR parts are also designed for easy replacement but may involve added complexity. Customers may choose to have Hewlett Packard Enterprise replace Optional CSR parts at no charge. Additional information regarding worldwide limited warranty and technical support is available at: https://www.hpe.com/support/ProLiantServers-Warranties and here.

Server Management

HPE iLO Advanced
HPE iLO Advanced licenses offer smart remote functionalities for all HPE ProLiant servers without compromise. The license includes the full integrated remote console, virtual keyboard, video, and mouse (KVM), multi-user collaboration, console record and replay, and GUI-based and scripted virtual media and virtual folders. You can also activate the enhanced security and power management functionality.

HPE OneView Advanced
HPE OneView Advanced offers a sophisticated level of automation to infrastructure management by taking a template-driven approach to provisioning, updating, and integrating compute, storage, and networking infrastructure. It builds upon the base features of HPE OpenView Standard and provides full-featured licenses which can be purchased for managing multiple HPE server generations.

To learn more, visit http://www.hpe.com/info/oneview.

Accelerator and GPU Information
Hewlett Packard Enterprise supports various accelerators on select HPE ProLiant servers to support different workloads. The accelerators enable seamless integration of GPU computing with HPE ProLiant servers for high-performance computing, large data center graphics, deep learning and virtual desktop deployments. These accelerators deliver all the standard benefits of GPU computing while enabling maximum reliability and tight integration with system monitoring and management tools such as HPE Insight Cluster Management Utility.

One Config Simple (OCS/SCE)
OCS/SCE is a guided self-service tool to help sales and non-technical people provide customers with initial configurations in 3 to 5 minutes. You may then send the configuration on for configuration help or use it in your existing ordering processes. If you require "custom" rack configuration or configuration for products not available in SCE, please contact Hewlett Packard Enterprise Customer Business Center or an Authorized Partner for assistance.
https://ocs.ext.hpe.com/SimplifiedConfig/Welcome

Rack and Power Infrastructure
The story may end with servers, but it starts with the foundation that makes computing work go – and business grow. We've reinvented our entire portfolio of rack and power products to make IT infrastructure more secure, practical, and efficient. In other words, we've created a more robust, smarter, and simpler infrastructure to help you get the most out of your IT equipment. As an industry leader, Hewlett Packard Enterprise is uniquely positioned to address the key concerns of power, cooling, cable management, and system access.

HPE G2 Advanced and Enterprise Racks are perfect for the server room o today's modern data center, with enhanced airflow and thermal management, flexible cable management, and a 10-year Warranty to support higher-density computing.

HPE G2 PDUs offer reliable power in flexible form factors that operate at temperatures up to 60°C, include color-coded outlets and load segments, and a low-profile design for optimal access to the rack and support for dense rack environments.

HPE Uninterruptible Power Systems are cost-effective power protection for any workload. Some UPSs include options for remote management and extended runtime modules so ' 'your critical dense data center is covered in power outages.

Optional Features

HPE KVM Solutions include a console and switches designed to work reliably with your server and IT equipment. ' 'We've got a cost-effective KVM switch for your first rack and multiple connection IP switches with remote management and security capabilities to keep your data center rack up and running.

Learn more about HPE Racks, KVM, PDUs, and UPSs at HPE Rack and Power Infrastructure.

Service and Support

HPE provides a portfolio of support, deployment, and lifecycle management services designed to help customers maximize the value, performance, and availability of their HPE infrastructure. HPE Complete Care Service provides a highly personalized support experience with proactive guidance and expert-led lifecycle management, while HPE Tech Care Service provides fast access to product specialists and flexible response options tailored to operational needs. Both HPE Complete Care Service and HPE Tech Care Service are available with defective media retention, comprehensive defective material retention, and GPU defective material recovery options.

Beyond support, HPE Lifecycle Services help customers deploy and optimize their environments with confidence. From HPE Factory Express services that streamline system configuration and integration before delivery, to Installation and Startup Services that accelerate time to value. For the latest information on HPE Services, please refer to the HPE Services - Supplemental QuickSpecs | HPE, which provides a comprehensive and regularly updated overview of available services.

Configuration Information

Smart Templates from HPE

HPE is releasing new Smart Template technology in the One Config Advanced (OCA) configurator. These Templates represent the CTO equivalents of the top-selling BTO configurations. They are intended to provide simple starting points to assist you in easily creating and customizing your desired Server solutions. HPE Servers that have Platform Templates developed by HPE Product Managers will have a separate tab in the HPE OCA configurator.

Workload Solutions Templates from HPE

The Workload Solutions Templates build on the Smart Templates technology to easily develop working configurations of the most compelling Workload Solutions. The templates complement the reference Builds developed by HPE. Workload Solutions templates preconfigure some of the key architecture decisions and make it easier for Sellers to get started and complete a differentiated server solution for your ' 'customer's specific workload.

Mainstream SKUs

HPE launched the Mainstream SKU initiative as a market-driven approach to Demand Steering. It is a simplified portfolio of our top-selling options that meet the current and future market trends. HPE has committed to providing a more predictable and faster experience for these options. Mainstream SKUs enjoy higher safety stock levels and have higher fulfillment service levels than non-Mainstream SKUs. Mainstream orders are fulfilled +30% faster than non-Mainstream orders, have fewer shortages, and have better recovery dates. This platform has Mainstream SKUs in the options portfolio and is eligible for an improved Mainstream experience. Mainstream SKUs are designated with a Mainstream symbol in our configurators.

Mainstream Configurations

HPE is using the new Smart Templates technology to present Mainstream configurations. All the options in a Mainstream configuration are pre-selected Mainstream SKUs to optimize the performance, predictability, and fulfillment experience. Check the Template section in our configurators for eligible Mainstream configurations.

This section lists some of the steps required to configure a Factory Integrated Model. To ensure valid configurations are ordered, Hewlett Packard Enterprise recommends using an HPE-approved configurator. Contact your local sales representative for information on configurable product offerings and requirements.

- Factory Integrated Models must start with a CTO Server.
- FIO indicates that this option is only available as a factory installable option.
- Some options may not be integrated at the factory. Contact your local sales representative for additional information.

Configuration Information

Step 1: Base Configuration (choose one (1) of the following (3) configurable models from the tables below)

CTO Server	HPE ProLiant DL320 Gen11 4 LFF CTO Server	HPE ProLiant DL320 Gen11 8 SFF CTO Server	HPE ProLiant DL320 Gen11 12 LFF CTO Server	HPE ProLiant DL320 Gen11 GPU CTO Server
SKU Number	P52765-B21	P52766-B21	P52767-B21	P61218-B21
TAA SKU[1]	P52765-B21#GTA	P52766-B21#GTA	P52767-B21#GTA	P61218-B21#GTA
Processor	Not included as standard			
DIMM Slots	16-DIMM slots			
Storage Controller	8 SATA ports, choice of HPE modular Smart Array and PCIe plug-in Controllers, and Intel® VROC Software RAID.			
PCIe	PCIe 5.0: 2 slots (x 16 FHHL) 1x OCP 3.0 in PCIe 5.0 (x16)			
Drive Cage – included	4 SAS/SATA LFF Direct attach for 4 LFF SATA	(8+2) SAS/SATA SFF (8+2) x2 NVMe SFF or, (8+2) x4 NVMe SFF	12 SAS/SATA LFF Direct attach support for 10 LFF SATA	4 SFF SAS/SATA/NVMe or 8 EDSFF E3.s 1T
Network Controller	Two (2) Embedded Broadcom BCM5720 1 GbE networking port Choice of either OCP 3.0 or select standup network adapters for primary networking selection plus additional/optional standup network adapters			
Fans	Support for (7) High-Performance Fans			
Management	HPE iLO with Intelligent Provisioning (standard), iLO Advanced (optional), and OneView (optional)			
USB	Front: One (1) USB 3.2 Gen1 + iLO service port Rear: Two (2) USB 3.2 Gen1 ports Internal: One (1) USB 2.0 port			
	Option: One (1) Front USB 2.0 port	Option: One (1) Front USB 2.0 port		
Security	Embedded TPM 2.0 (Trusted Platform Module) **Notes:** Enabling TPM 2.0 no longer requires TPM module option kit for Gen11 since It is an embedded feature.			
Rail Kit	Optional Easy Install rails and CMA			
Form Factor	1U Rack[2]			
Warranty	3-year parts, 3-year labor, 3-year onsite support with next business day response.			

Notes:

- All DL320 Gen11 CTO Server models require the selection of Processor, Memory and Power Supply. Backplane to be further selected in 8SFF and GPU CTO Server.
- [1]HPE offers multiple Trade Agreement Act (TAA) compliant configurations to meet the needs of US Federal Government customers. These products are either manufactured or substantially transformed into a designated country. TAA compliance is only provided when HPE options are included as part of factory integrated orders (CTO).

Configuration Information

- All CTO servers are ENERGY STAR® 3.0 compliant. After January 11, 2024, ENERGY STAR® 3.0 compliance is no longer valid. ENERGY STAR® 4.0 certification will be valid upon publication. Supported Rail kit to be defaulted for CTO Model in the configurator. But customer can deselect the Rail kit if the CTO Model is selected without Rack (Standalone server).
- If GPU CTO Model is selected, then Performance Heatsink must be selected.
- [2]12 LFF CTO Server requires 1200mm depth rack for proper mounting.

Step 2: Choose Options

Step 2a: Choose Processor

Processor Option Kits (Required Processor)

Notes:

- All SKUs below ship with one processor only. Adequate fans and heatsinks must be selected.
- Processors with TDP greater than 185W require High Performance Heatsink (P52756-B21) and High-Performance Fan Kit (P48908-B21).
- 5th Generation Intel® Xeon® supports "HPE DDR5 Smart Memory – Registered (RDIMM), up to 5600MT/s".
- 4th Generation Intel® Xeon® supports "HPE DDR5 Smart Memory – Registered (RDIMM), up to 4800 MT/s".
- 96 GB 4800 MT/s Memory cannot be selected if HBM or MCC die.
- 3508U supports PCIe 4.0 Only.

5th Generation Intel® Xeon®-Platinum	
Intel® Xeon®-Platinum 8581V 2.0GHz 60-core 270W Processor for HPE	P67109-B21
5th Generation Intel® Xeon®-Gold 6	
Intel® Xeon®-Gold 6526Y 2.8GHz 16-core 195W Processor for HPE	P67080-B21
Intel® Xeon®-Gold 6542Y 2.9GHz 24-core 250W Processor for HPE	P67081-B21
Intel® Xeon®-Gold 6548Y+ 2.5GHz 32-core 250W Processor for HPE	P67082-B21
Intel® Xeon®-Gold 6534 3.9GHz 8-core 195W Processor for HPE	P67083-B21
Intel® Xeon®-Gold 6544Y 3.6GHz 16-core 270W Processor for HPE	P67084-B21
Intel® Xeon®-Gold 6530 2.1GHz 32-core 270W Processor for HPE	P67095-B21
Intel® Xeon®-Gold 6538Y+ 2.2GHz 32-core 225W Processor for HPE	P67096-B21
Intel® Xeon®-Gold 6538N 2.1GHz 32-core 205W Processor for HPE	P67104-B21
Intel® Xeon®-Gold 6548N 2.8GHz 32-core 250W Processor for HPE	P67105-B21
Intel® Xeon®-Gold 6554S 2.2GHz 36-core 270W Processor for HPE	P67110-B21
5th Generation Intel® Xeon®-Gold 5	
Intel® Xeon®-Gold 5515+ 3.2GHz 8-core 165W Processor for HPE	P67079-B21
Intel® Xeon®-Gold 5520+ 2.2GHz 28-core 205W Processor for HPE	P67094-B21
Intel® Xeon®-Gold 5512U 2.1GHz 28-core 185W Processor for HPE	P67101-B21
5th Generation Intel® Xeon®-Silver	
Intel® Xeon®-Silver 4509Y 2.6GHz 8-core 125W Processor for HPE	P67090-B21
Intel® Xeon®-Silver 4510 2.4GHz 12-core 150W Processor for HPE	P67091-B21
Intel® Xeon®-Silver 4514Y 2.0GHz 16-core 150W Processor for HPE	P67092-B21

Configuration Information

Intel® Xeon®-Silver 4516Y+ 2.2GHz 24-core 185W Processor for HPE	P67093-B21
5th Generation Intel® Xeon®-Bronze	
Intel® Xeon®-Bronze 3508U 2.1GHz 8-core 125W Processor for HPE	P67100-B21

Notes: Intel® Bronze CPU Models (3508U) can support up to PCIe Gen4 speed. This will have impact on high-speed Networking & InfiniBand cards when selected with Bronze CPU Model.

4th Generation Intel® Xeon®-Gold 6	
Intel® Xeon®-Gold 6426Y 2.5GHz 16-core 185W Processor for HPE	P49598-B21
Intel® Xeon®-Gold 6442Y 2.6GHz 24-core 225W Processor for HPE	P49599-B21
Intel® Xeon®-Gold 6448Y 2.1GHz 32-core 225W Processor for HPE	P49600-B21
Intel® Xeon®-Gold 6434 3.7GHz 8-core 195W Processor for HPE	P49601-B21
Intel® Xeon®-Gold 6444Y 3.6GHz 16-core 270W Processor for HPE	P49602-B21
Intel® Xeon®-Gold 6430 2.1GHz 32-core 270W Processor for HPE	P49614-B21
Intel® Xeon®-Gold 6438Y+ 2.0GHz 32-core 205W Processor for HPE	P49615-B21
Intel® Xeon®-Gold 6421N 1.8GHz 32-core 185W Processor for HPE	P49641-B21
4th Generation Intel® Xeon®-Gold 5	
Intel® Xeon®-Gold 5415+ 2.9GHz 8-core 150W Processor for HPE	P49597-B21
Intel® Xeon®-Gold 5418Y 2.0GHz 24-core 185W Processor for HPE	P49612-B21
Intel® Xeon®-Gold 5411N 1.9GHz 24-core 165W Processor for HPE	P49639-B21
Intel® Xeon®-Gold 5418N 1.8GHz 24-core 165W Processor for HPE	P49640-B21
Intel® Xeon®-Gold 5416S 2.0GHz 16-core 150W Processor for HPE	P49653-B21
4th Generation Intel® Xeon®-Silver	
Intel® Xeon®-Silver 4410Y 2.0GHz 12-core 150W Processor for HPE	P49610-B21
Intel® Xeon®-Silver 4416+ 2.0GHz 20-core 165W Processor for HPE	P49611-B21

Step 2b: Choose Memory Options

Please select one or more memory DIMMs from below.

For the new Gen11 memory population rule whitepaper and optimal memory performance guidelines and memory speed table, please go to:
http://www.hpe.com/docs/memory-population-rules

For memory Reliability, Accessibility, and Serviceability (RAS) features whitepaper like Gen11 Fast Fault Tolerance and legacy mirrored memory feature, etc., please go to: https://www.hpe.com/psnow/doc/a50007802enw.

Notes:

- HPE Server Memory compatibility for a specific server platform may vary or be limited within a server platform depending upon the specific configuration being requested. Because each server environment and requirements can vary, memory compatibility is based not only upon the server family but may also be affected by the amount and type of additional hardware options installed within a specific server configuration. For this reason, some HPE memory DIMMs may be qualified for an HPE server model or family and yet occasionally not be supported with some configurations within that server family.
- Memory DIMMs must be selected in quantities 1, 2, 4, 6, 8, 12, or 16.
- The maximum memory speed and capacity are a function of the memory type, memory configuration, and processor model.

Configuration Information

For additional information, please see the HPE DDR5 Smart Memory QuickSpecs

Registered DIMMs DDR5 (RDIMMs)

HPE 16GB (1x16GB) Single Rank x8 DDR5-5600 CAS-46-45-45 EC8 Registered Smart Memory Kit	P64705-B21
HPE 32GB (1x32GB) Dual Rank x8 DDR5-5600 CAS-46-45-45 EC8 Registered Smart Memory Kit	P64706-B21
HPE 64GB (1x64GB) Dual Rank x4 DDR5-5600 CAS-46-45-45 EC8 Registered Smart Memory Kit	P64707-B21
HPE 96GB (1x96GB) Dual Rank x4 DDR5-5600 CAS-46-45-45 EC8 Registered Smart Memory Kit	P64708-B21
HPE 16GB (1x16GB) Single Rank x8 DDR5-4800 CAS-40-39-39 EC8 Registered Smart Memory Kit	P43322-B21
HPE 32GB (1x32GB) Dual Rank x8 DDR5-4800 CAS-40-39-39 EC8 Registered Smart Memory Kit	P43328-B21
HPE 64GB (1x64GB) Dual Rank x4 DDR5-4800 CAS-40-39-39 EC8 Registered Smart Memory Kit	P43331-B21
HPE 96GB (1x96GB) Dual Rank x4 DDR5-4800 CAS-46-45-45 EC8 Registered Smart Memory Kit	P66675-B21

Notes:

- Only HPE DDR5 5600 MT/s SKUs can be selected with 5th Generation Intel® processors.
- Only HPE DDR5 4800 MT/s SKUs can be selected with 4th Generation Intel® processors.
- Total memory selection must be in quantities of 1, 2, 4, 6, 8, 12 or 16. For more detailed information regarding memory population rules, please refer to - https://www.hpe.com/docs/server-memory.
- If Memory Fault Tolerance is selected, then only x4 memory options can be selected.
- Mixing x4, x8 or 3DS memory is not supported.
- Mixing 4800 Memory and 5600 Memory is not allowed.
- 96 GB Memory cannot be mixed with any other Memory and is supported with only select processors.
- For the GPU CTO Server, 96 GB and higher memory DIMMs are supported only with 25C and lower ambient temperature.
- 96 and 128 GB memory DIMMs require high performance fan kit.
- 5600 MT/s memory SKUs offer a transfer rate of 5600 MT/s at 1 DIMM per channel and 4400 MT/s at 2 DIMMs per channel.
- 4800 MT/s memory SKUs offer a transfer rate of 4800 MT/s at 1 DIMM per channel and 4400 MT/s at 2 DIMMs per channel.
- 96 GB 4800 MT/s Memory cannot be selected if HBM or MCC die.
- The -B21 memory SKUs shown in this document are to be used when ordering stand-alone memory only. For each -B21 SKU, there is a corresponding -F21 SKU which is to be used when configuring servers with integrated memory DIMMs.

Memory Blank Kit

HPE DDR4 DIMM Blank Kit	P07818-B21

Notes: Memory DIMM blanks must be installed in each empty slot.

Step 2c: Choose Power Supplies

Please select one or two power supplies from below.

Notes: Mixing of 2 different power supplies is NOT supported.

HPE Flex Slot Power Supplies

HPE 500W Flex Slot Platinum Hot Plug Low Halogen Power Supply Kit	865408-B21

Notes:

- If a 500W power supply is selected with HPE ProLiant DL320 Gen11 8SFF x4 Tri-Mode 24G U.3 BC Backplane Kit (P52747-B21), then the internal controller must be selected. However, this will only support SAS/SATA drives.
- If a 500W power supply is selected with 8SFF CTO Server, NVMe drives cannot be selected, and vice versa.

Configuration Information

HPE 1000W Flex Slot Titanium Hot Plug Power Supply Kit	P03178-B21
HPE 800W Flex Slot Platinum Hot Plug Low Halogen Power Supply Kit	P38995-B21
HPE 1600W Flex Slot Platinum Hot Plug Low Halogen Power Supply Kit	P38997-B21

Notes: Only supports high line voltage (200 VAC to 240 VAC).

HPE 1800W-2200W Flex Slot Titanium Hot Plug Power Supply Kit	P44712-B21

Step 2d: Choose backplane/drive cage

No optional backplanes are available for the existing LFF CTO configurations.

8 SFF customers can select the backplanes from the following options.

HPE ProLiant DL320 Gen11 8SFF x1 Tri-Mode 24G U.3 BC Backplane Kit	P52743-B21

Notes:

- If the 8SFF Drive cage is selected with PCIe Internal controller, then '8SFF TM Cable Kit (P52775-B21) ' must be selected.
- If the 8SFF Drive cage is selected with OROC controller, then '8SFF OROC Cable (P52780-B21)' must be selected.
- 8SFF x1 U.3 Drive cage with Direct attach supports 8 SATA Drives only.
- If MR416i-p/MR216i-p/SR932i-p/MR416i-o/MR216i-o controller is selected along with 8SFF x1 U.3 and 2SFF x4 U.3 drive cage, then one controller is enough to support both the drive cages with the selection of '8SFF cable kit' and '2SFF TM cable kit.'

HPE ProLiant DL320 Gen11 8SFF x4 Tri-Mode 24G U.3 BC Backplane Kit	P52747-B21

Notes:

- If the 8SFF Drive cage is selected with PCIe Internal controller, then '8SFF TM Cable Kit (P52775-B21)'' must be selected.
- If the 8SFF Drive cage is selected with OROC controller, then '8SFF OROC Cable (P52780-B21)' must be selected.
- 8SFF x4 U.3 Drive cage with Direct attach supports 8 NVMe U.3 Drives only.
- If 8SFF x4 U.3 Drive cage is selected with 2SFF U.3 drive cage and no Internal controller or NVMe adapter (P25527-B21) is selected, then 2SFF U.3 drive cage can support SATA drives only.
- If 8SFF x4 Drive cage and 2SFF drive cage is selected with Qty=1 of Internal controller, then '8SFF cable kit' or '2SFF TM cable kit (P52776-B21)' must be selected
- If 8SFF x4 Drive cage and 2SFF drive cage is selected with Qty=2 of Internal controller, then both '8SFF cable kit' and '2SFF TM cable kit (P52776-B21)' must be selected
- If 8SFF x4 Drive cage and 2SFF Drive cage are selected along with MR408i-o controller, then '2SFF TM cable kit (P52776-B21)' must be selected.
- '2SFF Drive cage' or '1U DP/USB/ODD Blank Kit' requires the selection of an 8SFF Drive cage.
- If 8SFF x4 Drive cage and 2SFF Drive cage is selected along with SR932i-p controller, then '8SFF TM cable kit (P52775-B21)' must be selected.

HPE ProLiant DL320 Gen11 2SFF x4 Tri-Mode 24G U.3 BC Drive Cage Kit	P52751-B21

Notes:

- If the 8SFF Drive cage is selected with PCIe Internal controller, then '8SFF TM Cable Kit(P52775-B21)'' must be selected.
- If the 2SFF Drive cage is selected with PCIe Internal controller or OROC controller, then the '2SFF TM Cable Kit (P52776-B21)' must be selected.
- If the 2SFF Drive cage is selected with NVMe 2p Adapter, then '2SFF Retimer Cable(P52777-B21)' must be selected.
- 2SFF U.3 Drive cage with direct attach supports either 2 NVMe U.3 drives or SATA drives.

Configuration Information

- If MR416i-p/MR216i-p/SR932i-p/MR416i-o/MR216i-o controller is selected along with 8SFF x1 U.3 and 2SFF x4 U.3 drive cage, then one controller is enough to support both the drive cages with the selection of '8SFF cable kit' and '2SFF TM cable kit (P52776-B21).'
- If the 8SFF x4 Drive cage and 2SFF drive cage are selected with Qty=1 of the Internal controller, then '8SFF cable kit' or '2SFF TM cable kit (P52776-B21)' must be selected.
- If the 8SFF x4 Drive cage and 2SFF drive cage are selected with Qty=2 of the Internal controller, then both '8SFF cable kit' and '2SFF TM cable kit (P52776-B21)' must be selected.
- If 8SFF x4 Drive cage and 2SFF Drive cage are selected along with MR408i-o controller, then '2SFF TM cable kit (P52776-B21)' must be selected.
- If the 8SFF x4 Drive cage and 2SFF Drive cage is selected along with the SR932i-p controller, then the '8SFF TM cable kit (P52775-B21)' must be selected.

HPE ProLiant DL3X0 Gen11 1U 8SFF DisplayPort/USB/Optical Drive Blank Kit P48926-B21

Notes:

- Either '2SFF drive cage' or '1U DP/USB/ODD Blank' can be selected.
- '2SFF Drive cage' or '1U DP/USB/ODD Blank Kit' requires an 8SFF Drive cage configuration.

HPE ProLiant DL320 Gen11 8EDSFF x4 NVMe Drive Cage Kit P61219-B21

Notes:

- Supported only with HPE ProLiant DL320 Gen11 GPU CTO Server (P61218-B21)
- 8EDSFF Drive cage is to be selected with HPE ProLiant DL320 Gen11 GPU 4x Direct Connected NVMe FIO Enablement Kit (P62181-B21) and drive cage will be connected to Direct attach and can support maximum of 4 EDSFF drives only.

HPE ProLiant DL320 Gen11 4SFF x4 Tri-Mode 24G U.3 BC Drive Cage Kit P61221-B21

Notes:

- Supported only with GPU CTO Server (P61218-B21).
- If 4SFF U.3 drive cage is selected with MR416i-p controller, then HPE ProLiant DL320 Gen11 4SFF Tri-Mode Cable Kit (P62189-B21) must be selected.
- If 4SFF Drive cage is selected and MR416i-p is not selected, then HPE ProLiant DL320 Gen11 GPU 4x Direct Connected NVMe FIO Enablement Kit () must be selected.
- If 4SFF U.3 Drive cage is selected with HPE ProLiant DL320 Gen11 GPU 4x Direct Connected NVMe FIO Enablement Kit (P62181-B21) then drive cage will be connected to direct attach and support a maximum of 4 NVMe U.3 drives only.

Step 3: Choose Additional Factory Integratable Options (FIO)

One of the following from each list may be selected if desired at the time of factory integration

HPE iLO Common Password FIO Setting P08040-B21

Notes:

- Replaces iLO default randomized password with an HPE-defined common password. HPE highly recommends changing this password immediately after the initial onboarding process.
- Customers who want to choose their own custom iLO default password should use the HPE Factory Express Integration Services.

HPE Bezel Lock Kit 875519-B21

Notes: Bezel lock kit requires selection of Bezel kit.

HPE ProLiant DL320 Gen11 GPU 4x Direct Connected NVMe FIO Enablement Kit P62181-B21

Notes:

- Supported only with GPU CTO Server.
- If 8EDSFF or 4SFF Drive cage is selected and MR416i-p is not selected, then "HPE DL320 G11 GPU 4xDC NVMe FIO Kit" must be selected.
- If 8EDSFF Drive cage is selected with "HPE DL320 G11 GPU 4xDC NVMe FIO Kit" then drive cage will be connected to Direct attach and supports up to 4 EDSFF drives only.
- If 4SFF U.3 Drive cage is selected with "HPE DL320 G11 GPU 4xDC NVMe FIO Kit" then drive cage will be connected to direct attach and support Max=4 NVMe U.3 drives only.
- Cannot be selected if MR416i-p controller is selected.
- Max=1 of 'GPU 4xDC NVMe FIO Kit' or '4SFF TM Cable Kit' or '2xType-p NVMe Cable Kit' can be selected
- If Qty=1 of GPU is selected with GPU CTO Server, then 'GPU 4xDC NVMe FIO Kit' or '2 GPU FIO Enable Kit' must be selected. In GPU CTO Server if ‘GPU 4xDC NVMe FIO Kit' then the first GPU card selected will be installed in the front of the server. This should not be considered for total PCIe selection.

HPE ProLiant DL320 Gen11 2SFF MLB FIO Power Cable Kit P66961-B21

Notes:

- Max=1
- If 2SFF Drive cage is selected and 8SFF drive cage is not selected then 2SFF MLB FIO Power Cable Kit must be selected.
- 2SFF MLB FIO Power Cable Kit cannot be selected if 8SFF drive cage is selected.
- Not Supported with GPU CTO Server.
- 2SFF MLB FIO Power Cable Kit requires selection of 2SFF drive cage.

HPE Converged Infrastructure Management Software

HPE OneView including 3yr 24x7 Support Flexible Quantity E-LTU E5Y35AAE

Step 4: Choose Additional Options for Factory Integration from the Core and Additional Options sections below

HPE Processors (Please select one processor).

Notes:

- All SKUs below ship with a processor only. Adequate fans and heatsinks (standard or high performance) must be selected.
- 4800 MT/S maximum memory speed unless otherwise noted.
- 128GB SGX Enclave unless otherwise noted.
- Processors with TDP greater than 185W require High-Performance Heatsink (P52756-B21).
- Processors with TDP greater than 185W require High-Performance Fan Kit (P48908-B21).

4th Generation Intel® Xeon®-Gold 6	
Intel® Xeon®-Gold 6426Y 2.5GHz 16-core 185W Processor for HPE	P49598-B21
Intel® Xeon®-Gold 6442Y 2.6GHz 24-core 225W Processor for HPE	P49599-B21
Intel® Xeon®-Gold 6448Y 2.1GHz 32-core 225W Processor for HPE	P49600-B21
Intel® Xeon®-Gold 6434 3.7GHz 8-core 195W Processor for HPE	P49601-B21
Intel® Xeon®-Gold 6444Y 3.6GHz 16-core 270W Processor for HPE	P49602-B21
Intel® Xeon®-Gold 6430 2.1GHz 32-core 270W Processor for HPE	P49614-B21
Intel® Xeon®-Gold 6438Y+ 2.0GHz 32-core 205W Processor for HPE	P49615-B21
Intel® Xeon®-Gold 6421N 1.8GHz 32-core 185W Processor for HPE	P49641-B21
4th Generation Intel® Xeon®-Gold 5	
Intel® Xeon®-Gold 5415+ 2.9GHz 8-core 150W Processor for HPE	P49597-B21
Intel® Xeon®-Gold 5418Y 2.0GHz 24-core 185W Processor for HPE	P49612-B21
Intel® Xeon®-Gold 5411N 1.9GHz 24-core 165W Processor for HPE	P49639-B21
Intel® Xeon®-Gold 5418N 1.8GHz 24-core 165W Processor for HPE	P49640-B21
Intel® Xeon®-Gold 5416S 2.0GHz 16-core 150W Processor for HPE	P49653-B21
4th Generation Intel® Xeon®-Silver	
Intel® Xeon®-Silver 4410Y 2.0GHz 12-core 150W Processor for HPE	P49610-B21
Notes: 64GB SGX Enclave.	
Intel® Xeon®-Silver 4416+ 2.0GHz 20-core 165W Processor for HPE	P49611-B21
Notes: 64GB SGX Enclave.	

HPE Memory

To streamline the configuration process for HPE ProLiant Gen11 servers and to provide the best product availability.

Notes: HPE Server Memory compatibility for a specific server platform may vary or be limited within a server platform depending upon the specific configuration being requested. Because each server environment and requirements can vary, memory compatibility is based not only upon the server family but may also be affected by the amount and type of additional hardware options installed within a specific server configuration. For this reason, some HPE memory DIMMs may be qualified for an HPE server model or family and yet occasionally not be supported with some configurations within that server family.
Maximum memory capacity and speed per processor depend on processor model selection or limitation.

HPE DDR5 Memory

Notes: DIMMs must be selected in quantities 1, 2, 4, 6, 8, 12, or 16 per socket.

Registered DIMMs (RDIMMs)

HPE 16GB (1x16GB) Single Rank x8 DDR5-4800 CAS-40-39-39 EC8 Registered Smart Memory Kit	P43322-B21
HPE 32GB (1x32GB) Dual Rank x8 DDR5-4800 CAS-40-39-39 EC8 Registered Smart Memory Kit	P43328-B21
HPE 64GB (1x64GB) Dual Rank x4 DDR5-4800 CAS-40-39-39 EC8 Registered Smart Memory Kit	P43331-B21
HPE 96GB (1x96GB) Dual Rank x4 DDR5-4800 CAS-46-45-45 EC8 Registered Smart Memory Kit	P66675-B21

Notes:

- Mixing of x4 and x8 DIMMs is not allowed.
- Mixing of 3DS and non-3DS DIMMs is not allowed.
- Mixing of Single Rank and Dual Rank DIMM is allowed only when the total qty of DIMM selected is 16.
- If Single Rank and Dual Rank DIMMs are mixed, then the Qty of Single Rank DIMM selected must be equal to the quantity of Dual Rank DIMM.
- 128GB DIMMs require High-Performance Fan Kit (P48908-B21).

HPE DIMM blanks

HPE DDR4 DIMM Blank Kit	P07818-B21

Optical Drives

HPE Mobile USB DVD-RW Optical Drive	701498-B21
HPE 9.5mm SATA DVD-ROM Optical Drive	726536-B21
HPE 9.5mm SATA DVD-RW Optical Drive	726537-B21

Notes:

- If Optical Drive is selected with 8SFF CTO Server, then '1U DP/USB/ODD Blank Kit' must be selected.
- If Optical Drive is selected with 4LFF CTO Server, then '4LFF ODD cable kit (P54641-B21)' must be selected.
- Not Supported with 12LFF or the GPU CTO Server.

HPE ProLiant DL3X0 Gen11 1U LFF DisplayPort/USB Kit	P48928-B21

Notes: Supported only with 4LFF CTO Server.

HPE Hard Disk Drives

Mission Critical - 12G SAS - SFF Drives

HPE 2.4TB SAS 12G Mission Critical 10K SFF BC 3yr Wty 512e FIPS 140-2 TAA-compliant HDD	P28618-B21
HPE 1.2TB SAS 12G Mission Critical 10K SFF BC 3yr Wty FIPS 140-2 TAA-compliant HDD	P28622-B21

Enterprise - 12G SAS - SFF Drives

HPE 2.4TB SAS 12G Mission Critical 10K SFF BC 3-year Warranty 512e Multi Vendor HDD	P28352-B21
HPE 1.8TB SAS 12G Mission Critical 10K SFF BC 3-year Warranty 512e Multi Vendor HDD	P53562-B21
HPE 1.2TB SAS 12G Mission Critical 10K SFF BC 3-year Warranty Multi Vendor HDD	P28586-B21
HPE 300GB SAS 12G Mission Critical 10K SFF BC 3-year Warranty Multi Vendor HDD	P40430-B21

Midline - 12G SAS - LFF Drives

HPE 20TB SAS 12G Business Critical 7.2K LFF LP 1-year Warranty Helium 512e ISE Multi Vendor HDD	P53553-B21
HPE 16TB SAS 12G Business Critical 7.2K LFF LP 1-year Warranty Helium 512e ISE Multi Vendor HDD	P23608-B21
HPE 12TB SAS 12G Business Critical 7.2K LFF LP 1-year Warranty Helium 512e Multi Vendor HDD	881781-B21
HPE 26TB SAS 12G Business Critical 7.2K LFF LP 1-year Warranty Helium 512e ISE Multi Vendor HDD	P80577-B21
HPE 8TB SAS 12G Business Critical 7.2K LFF LP 1-year Warranty 512e Multi Vendor HDD	834031-B21
HPE 4TB SAS 12G Business Critical 7.2K LFF LP 1-year Warranty Multi Vendor HDD	833928-B21

Midline - 6G SATA - LFF Drives

HPE 20TB SATA 6G Business Critical 7.2K LFF LP 1-year Warranty Helium 512e ISE Multi Vendor HDD	P53554-B21
HPE 16TB SATA 6G Business Critical 7.2K LFF LP 1-year Warranty Helium 512e ISE Multi Vendor HDD	P23449-B21
HPE 12TB SATA 6G Business Critical 7.2K LFF LP 1-year Warranty Helium 512e Multi Vendor HDD	881787-B21
HPE 26TB SATA 6G Business Critical 7.2K LFF LP 1-year Warranty Helium 512e ISE Multi Vendor HDD	P80578-B21
HPE 8TB SATA 6G Business Critical 7.2K LFF LP 1-year Warranty 512e Multi Vendor HDD	834028-B21
HPE 4TB SATA 6G Business Critical 7.2K LFF LP 1-year Warranty Multi Vendor HDD	861683-B21
HPE 2TB SATA 6G Business Critical 7.2K LFF LP 1-year Warranty Multi Vendor HDD	861681-B21
HPE 1TB SATA 6G Business Critical 7.2K LFF LP 1-year Warranty Multi Vendor HDD	861686-B21

SSD Selection

For SSD selection guidance, please visit: https://ssd.hpe.com/

Read Intensive – 12G SAS - SFF - Solid State Drives	
HPE 7.68TB SAS 12G Read Intensive SFF BC Value SAS Multi Vendor SSD	P40509-B21
HPE 3.84TB SAS 12G Read Intensive SFF BC Value SAS Multi Vendor SSD	P40508-B21
HPE 1.92TB SAS 12G Read Intensive SFF BC Value SAS Multi Vendor SSD	P40507-B21
HPE 960GB SAS 12G Read Intensive SFF BC Value SAS Multi Vendor SSD	P40506-B21
Read Intensive –24G SAS - SFF - Solid State Drives	
HPE 15.36TB SAS 24G Read Intensive SFF BC Multi Vendor SSD	P49045-B21
HPE 7.68TB SAS 24G Read Intensive SFF BC Multi Vendor SSD	P49041-B21
HPE 3.84TB SAS 24G Read Intensive SFF BC Multi Vendor SSD	P49035-B21
HPE 1.92TB SAS 24G Read Intensive SFF BC Multi Vendor SSD	P49031-B21
HPE 960GB SAS 24G Read Intensive SFF BC Multi Vendor SSD	P49029-B21
Notes: Require High-Performance Fan Kit (P48908-B21).	
Mixed Use – 12 SAS - SFF - Solid State Drives	
HPE 3.84TB SAS 12G Mixed Use SFF BC Value SAS Multi Vendor SSD	P40512-B21
HPE 1.92TB SAS 12G Mixed Use SFF BC Value SAS Multi Vendor SSD	P40511-B21
HPE 960GB SAS 12G Mixed Use SFF BC Value SAS Multi Vendor SSD	P40510-B21
Mixed Use –24G SAS - SFF - Solid State Drives	
HPE 6.4TB SAS 24G Mixed Use SFF BC Multi Vendor SSD	P49057-B21
HPE 3.2TB SAS 24G Mixed Use SFF BC Multi Vendor SSD	P49053-B21
HPE 1.6TB SAS 24G Mixed Use SFF BC Multi Vendor SSD	P49049-B21
HPE 800GB SAS 24G Mixed Use SFF BC Multi Vendor SSD	P49047-B21
Notes: Require High-Performance Fan Kit (P48908-B21).	
Very Read Optimized - 6G SATA - SFF - Solid State Drives	
Read Intensive - 6G SATA - SFF - Solid State Drives	
HPE 7.68TB SATA 6G Read Intensive SFF BC Multi Vendor SSD	P40501-B21
HPE 3.84TB SATA 6G Read Intensive SFF BC Multi Vendor SSD	P40500-B21
HPE 1.92TB SATA 6G Read Intensive SFF BC Multi Vendor SSD	P40499-B21
HPE 480GB SATA 6G Read Intensive SFF BC Multi Vendor SSD	P40497-B21
HPE 960GB SATA 6G Read Intensive SFF BC Multi Vendor SSD	P40498-B21
HPE 480GB SATA 6G Read Intensive SFF BC Self-encrypting 5400P SSD	P58236-B21
Mixed Use - 6G SATA - SFF - Solid State Drives	
HPE 3.84TB SATA 6G Mixed Use SFF BC Multi Vendor SSD	P40505-B21
HPE 1.92TB SATA 6G Mixed Use SFF BC Multi Vendor SSD	P40504-B21
HPE 960GB SATA 6G Mixed Use SFF BC Multi Vendor SSD	P40503-B21
HPE 960GB SATA 6G Mixed Use SFF BC Self-encrypting 5400M SSD	P58244-B21
HPE 480GB SATA 6G Mixed Use SFF BC Multi Vendor SSD	P40502-B21

Core Options

Mixed Use - 12G SAS - LFF –Solid State Drives

HPE 960GB SAS 12G Mixed Use LFF LPC Value SAS Multi Vendor SSD	P37009-B21

Read Intensive - 6G SATA - LFF - Solid State Drives

HPE 960GB SATA 6G Read Intensive LFF LPC Multi Vendor SSD	P47808-B21

NVMe Gen5 – Read Intensive

Read Intensive – NVMe – EDSFF - Solid State Drives

HPE 1.92TB NVMe Gen5 Mainstream Performance Read Intensive E3S EC1 SPDM 7600 SSD	P85121-B21
HPE 1.92TB NVMe Gen5 Mainstream Performance Read Intensive E3S EC1 Self-encrypting 7600 SSD	P87719-B21
HPE 1.92TB NVMe Gen5 Mainstream Performance Read Intensive E3S EC1 Self-encrypting 7600 SSD	P87719-B21
HPE 1.92TB NVMe Gen5 Mainstream Performance Read Intensive E3S EC1 SPDM 7600 SSD	P85121-B21
HPE 3.2TB NVMe Gen5 High Performance Mixed Use E3S EC1 EDSFF SPDM CM7 SSD	P61191-B21
HPE 3.84TB NVMe Gen5 Mainstream Performance Read Intensive E3S EC1 SPDM 7600 SSD	P85124-B21
HPE 3.84TB NVMe Gen5 High Performance Read Intensive E3S EC1 EDSFF SPDM CM7 SSD	P61179-B21
HPE 3.84TB NVMe Gen5 Mainstream Performance Read Intensive E3S EC1 Self-encrypting 7600 SSD	P87721-B21
HPE 7.68TB NVMe Gen5 High Performance Read Intensive E3S EC1 EDSFF SPDM CM7 SSD	P61183-B21
HPE 15.36TB NVMe Gen5 High Performance Read Intensive E3S EC1 EDSFF SPDM CM7 SSD	P61187-B21
HPE 3.84TB NVMe Gen5 High Performance Read Intensive E3S EC1 EDSFF SPDM PM1743 SSD	P57799-B21
HPE 3.84TB NVMe Gen5 Mainstream Performance Read Intensive E3S EC1 Self-encrypting 7600 SSD	P87721-B21
HPE 3.84TB NVMe Gen5 Mainstream Performance Read Intensive E3S EC1 SPDM 7600 SSD	P85124-B21
HPE 7.68TB NVMe Gen5 Mainstream Performance Read Intensive E3S EC1 SPDM 7600 SSD	P85126-B21
HPE 7.68TB NVMe Gen5 Mainstream Performance Read Intensive E3S EC1 Self-encrypting 7600 SSD	P87723-B21
HPE 7.68TB NVMe Gen5 Mainstream Performance Read Intensive E3S EC1 Self-encrypting 7600 SSD	P87723-B21
HPE 7.68TB NVMe Gen5 Mainstream Performance Read Intensive E3S EC1 SPDM 7600 SSD	P85126-B21
HPE 15.36TB NVMe Gen5 Mainstream Performance Read Intensive E3S EC1 SPDM 7600 SSD	P85128-B21
HPE 15.36TB NVMe Gen5 High Performance Read Intensive E3S EC1 EDSFF SPDM PM1743 SSD	P57807-B21
HPE 15.36TB NVMe Gen5 High Performance Read Intensive E3S EC1 Self-encrypting FIPS 140-3 CM7 SSD	P79122-B21
HPE 15.36TB NVMe Gen5 Mainstream Performance Read Intensive E3S EC1 SPDM 7600 SSD	P85128-B21

Mixed Use – NVMe – EDSFF - Solid State Drives

HPE 1.6TB NVMe Gen5 Mainstream Performance Mixed Use E3S EC1 SPDM 7600 SSD	P85114-B21
HPE 1.6TB NVMe Gen5 Mainstream Performance Mixed Use E3.S EC1 Self-encrypting 7600 SSD	P87715-B21
HPE 1.6TB NVMe Gen5 Mainstream Performance Mixed Use E3.S EC1 Self-encrypting 7600 SSD	P87715-B21
HPE 1.6TB NVMe Gen5 Mainstream Performance Mixed Use E3S EC1 SPDM 7600 SSD	P85114-B21
HPE 3.2TB NVMe Gen5 Mainstream Performance Mixed Use E3S EC1 SPDM 7600 SSD	P85117-B21
HPE 3.2TB NVMe Gen5 Mainstream Performance Mixed Use E3.S EC1 Self-encrypting 7600 SSD	P87717-B21
HPE 3.2TB NVMe Gen5 Mainstream Performance Mixed Use E3.S EC1 Self-encrypting 7600 SSD	P87717-B21
HPE 3.2TB NVMe Gen5 Mainstream Performance Mixed Use E3S EC1 SPDM 7600 SSD	P85117-B21
HPE 6.4TB NVMe Gen5 Mainstream Performance Mixed Use E3S EC1 SPDM 7600 SSD	P85119-B21
HPE 6.4TB NVMe Gen5 Mainstream Performance Mixed Use E3S EC1 SPDM 7600 SSD	P85119-B21

Read Intensive - NVMe - SFF - Solid State Drives

HPE 15.36TB NVMe Gen4 High Performance Read Intensive SFF BC U.3 CM7 SSD	P63841-B21
HPE 7.68TB NVMe Gen4 High Performance Read Intensive SFF BC U.3 CM7 SSD	P63837-B21
HPE 3.84TB NVMe Gen4 High Performance Read Intensive SFF BC U.3 CM7 SSD	P63833-B21
HPE 1.92TB NVMe Gen4 High Performance Read Intensive SFF BC U.3 PM1733a SSD	P50216-B21
HPE 15.36TB NVMe Gen4 Mainstream Performance Read Intensive SFF BC U.3 SPDM 7500b SSD	P84239-B21

Core Options

Mixed Use - NVMe - SFF - Solid State Drives

HPE 6.4TB NVMe Gen4 High Performance Mixed Use SFF BC U.3 CM7 SSD	P63853-B21
HPE 3.2TB NVMe Gen4 High Performance Mixed Use SFF BC U.3 CM7 SSD	P63849-B21
HPE 1.6TB NVMe Gen4 High Performance Mixed Use SFF BC U.3 PM1735a SSD	P50227-B21
HPE 1.6TB NVMe Gen4 High Performance Mixed Use SFF BC U.3 CM7 SSD	P63845-B21
HPE 7.68TB NVMe Gen4 Mainstream Performance Read Intensive SFF BC U.3 Static V2 Multi Vendor SSD	P64848-B21

Notes: Require High-Performance Fan Kit (P48908-B21).

VROC - Solid State Drives

HPE 3.84TB NVMe Gen4 Mainstream Performance Very Read Optimized E3S EC1 EDSFF P5430 SSD	P63930-B21
HPE 7.68TB NVMe Gen4 Mainstream Performance Very Read Optimized E3S EC1 EDSFF P5430 SSD	P63934-B21
HPE 15.36TB NVMe Gen4 Mainstream Performance Very Read Optimized E3S EC1 EDSFF P5430 SSD	P63938-B21
HPE 30.72TB NVMe Gen4 Mainstream Performance Very Read Optimized E3S EC1 EDSFF P5430 SSD	P79065-B21

Notes: Requires selection of 8EDSFF Drive cage (P61219-B21).

Read Intensive - M.2 - Solid State Drives

HPE 480GB SATA 6G Read Intensive M.2 Multi Vendor SSD	P47818-B21
HPE 960GB NVMe Gen4 Mainstream Performance Read Intensive M.2 2280 Self-encrypting PE9010 SSD	P80327-B21
HPE 480GB NVMe Gen4 Mainstream Performance Read Intensive M.2 2280 PE9010 SSD	P80318-B21
HPE 960GB NVMe Gen4 Mainstream Performance Read Intensive M.2 2280 PE9010 SSD	P80321-B21
HPE 1.92TB NVMe Gen4 Mainstream Performance Read Intensive M.2 2280 PE9010 SSD	P80324-B21

Notes:

- Mixing of SATA M.2 and NVMe M.2 SSDs is not allowed.
- Need x7 fans (standard or performance).
- If M.2 SSD is selected then '2P Std Fan Kit' must be selected along with Standard Fan kit or High Performance Fan kit must be selected. This rule is not applicable for GPU CTO server.
- All the M.2 NVMe drive will only run maximum PCIe Gen3 speed in DL320 Gen11.

Hard Drive Blank Kits

HPE Gen9 LFF HDD Spade Blank Kit	807878-B21
HPE Small Form Factor Hard Drive Blank Kit	666987-B21

HPE Networking

1 Gigabit Ethernet adapters

Broadcom BCM5719 Ethernet 1Gb 4-port BASE-T Adapter for HPE	P51178-B21
Intel® I350-T4 Ethernet 1Gb 4-port BASE-T Adapter for HPE	P21106-B21

10 Gigabit Ethernet adapters

Broadcom BCM57416 Ethernet 10Gb 2-port BASE-T Adapter for HPE	P26253-B21
Broadcom BCM57412 Ethernet 10Gb 2-port SFP+ Adapter for HPE	P26259-B21

25 Gigabit Ethernet adapters

Broadcom BCM57414 Ethernet 10/25Gb 2-port SFP28 Adapter for HPE	P26262-B21
Broadcom BCM57504 Ethernet 10/25Gb 4-port SFP28 Adapter for HPE	P26264-B21
Intel® E810-XXVDA2 Ethernet 10/25Gb 2-port SFP28 Adapter for HPE	P08443-B21
Intel® E810-XXVDA4 Ethernet 10/25Gb 4-port SFP28 Adapter for HPE	P08458-B21
Mellanox MCX631102AS-ADAT Ethernet 10/25Gb 2-port SFP28 Adapter for HPE	P42044-B21
NVIDIA Ethernet 10/25Gb 2-port SFP28 NVMe-oF Crypto Adapter for HPE	S2A69A

Notes:

- Recommended ambient temperature with High-Performance Fan Kit (P48908-B21)
- *Conditional support, with DAC (direct attach copper) cable only.

	P26264-B21	P08443-B21	P08458-B21	P42044-B21	S2A69A
4 LFF (P52765-B21)	25 °C	35 °C	25 °C	25 °C	25 °C
8 SFF (P52766-B21)	25 °C	35 °C	25 °C	25 °C	25 °C
12 LFF (P52767-B21)	25 °C	35 °C	25 °C	25 °C	25 °C
GPU Dense (P61218-B21) with 1 Single Wide or 1 Double Wide GPU in front	25 °C	35 °C	25 °C	25 °C	25 °C
GPU Dense (P61218-B21) with up to 2 Single Wide GPU in front	25 °C	35 °C	25 °C	25 °C	25 °C
GPU Dense (P61218-B21) with 2 Double Wide or 4 Single Wide GPUs in the front	25 °C *	25 °C	25 °C *	25 °C *	25 °C *

100 Gigabit Ethernet Adapters

Mellanox MCX623106AS-CDAT Ethernet 100Gb 2-port QSFP56 Adapter for HPE P25960-B21
Intel® E810-CQDA2 Ethernet 100Gb 2-port QSFP28 Adapter for HPE P21112-B21
Notes: Recommended ambient temperature with High-Performance Fan Kit (P48908-B21).

	P25960-B21	P31246-B21	P21112-B21
4 LFF (P52765-B21)	25 °C	25 °C	25 °C
8 SFF (P52766-B21)	25 °C	25 °C	25 °C
12 LFF (P52767-B21)	Not supported	Not supported	Not supported
GPU Dense (P61218-B21) with 1 Single Wide or 1 Double Wide GPU in front	25 °C	25 °C	25 °C
GPU Dense (P61218-B21) with up to 2 Single Wide GPU in front	25 °C	25 °C	25 °C
GPU Dense (P61218-B21) with 2 Double Wide or 4 Single Wide GPUs in front	Not supported	Not supported	Not supported

OCP 3.0 Adapters

Broadcom BCM5719 Ethernet 1Gb 4-port BASE-T OCP3 Adapter for HPE P51181-B21
Intel® I350-T4 Ethernet 1Gb 4-port BASE-T OCP3 Adapter for HPE P08449-B21
Broadcom BCM57416 Ethernet 10Gb 2-port BASE-T OCP3 Adapter for HPE P10097-B21
Broadcom BCM57412 Ethernet 10Gb 2-port SFP+ OCP3 Adapter for HPE P26256-B21
Broadcom BCM57504 Ethernet 10/25Gb 4-port SFP28 OCP3 Adapter for HPE P26269-B21
Broadcom BCM57414 Ethernet 10/25Gb 2-port SFP28 OCP3 Adapter for HPE P10115-B21
Intel® E810-XXVDA2 Ethernet 10/25Gb 2-port SFP28 OCP3 Adapter for HPE P10106-B21
Mellanox MCX631432AS-ADAI Ethernet 10/25Gb 2-port SFP28 OCP3 Adapter for HPE P42041-B21
Intel® E810-CQDA2 Ethernet 100Gb 2-port QSFP28 OCP3 Adapter for HPE P22767-B21
Notes: Recommended ambient temperature with High-Performance Fan Kit (P48908-B21).

	P26269-B21	P10106-B21	P42041-B21	P22767-B21
4 LFF (P52765-B21)	35 °C	35 °C	35 °C	35 °C
8 SFF (P52766-B21)	35 °C	35 °C	35 °C	35 °C
12 LFF (P52767-B21)	35 °C	35 °C	35 °C	35 °C
GPU Dense (P61218-B21) with 1 Single Wide or 1 Double Wide GPU in front	25 °C	35 °C	35 °C	25 °C
GPU Dense (P61218-B21) with up to 2 Single Wide or 1 Double Wide GPU in front	25 °C	35 °C	35 °C	25 °C
GPU Dense (P61218-B21) with 2 Double Wide or 4 Single Wide GPU in the front	25 °C	35 °C	35 °C	25 °C

Fibre Channel HBA

HPE SN1610E 32Gb 1-port Fibre Channel Host Bus Adapter	R2J62A
HPE SN1610E 32Gb 2-port Fibre Channel Host Bus Adapter	R2J63A
HPE SN1610Q 32Gb 1-port Fibre Channel Host Bus Adapter	R2E08A
HPE SN1610Q 32Gb 2-port Fibre Channel Host Bus Adapter	R2E09A

Notes: PCIe 3.0 x8// FH or LP for SN1610Q/1610E.

HPE SN1700E 64Gb 1-port Fibre Channel Host Bus Adapter	R7N77A
HPE SN1700E 64Gb 2-port Fibre Channel Host Bus Adapter	R7N78A
HPE SN1700Q 64Gb 1-port Fibre Channel Host Bus Adapter	R7N86A
HPE SN1700Q 64Gb 2-port Fibre Channel Host Bus Adapter	R7N87A

Notes: PCIe 4.0 x8// FH or LP for SN1700QE 1-port and 2-port.

	829335-B21	P23665-B21	P23666-B21
4 LFF (P52765-B21)	35 °C	35 °C	25 °C
8 SFF (P52766-B21)	35 °C	35 °C	25 °C
12 LFF (P52767-B21)	35 °C	35 °C	25 °C
GPU Dense (P61218-B21) with 1 Single Wide or 1 Double Wide GPU in front	25 °C		
GPU Dense (P61218-B21) with up to 2 Single Wide GPUs in front	35 °C	35 °C	25 °C
GPU Dense (P61218-B21) with 2 Double Wide or 4 Single Wide GPU in the front	25 °C	25 °C	25 °C*

HPE I/O Expansion Options

Notes:

- Slot 1: The Primary Riser shipping default in the CTO server is a x16 FHHL.
- Slot 2: The Secondary Riser in the CTO server is optional x16 FHHL.

Risers

Part number	Description	Bus width (Gen5 lanes)			
		Primary	Secondary	Slot 1	Slot 2
P52753-B21	HPE DL320 Gen11 x16 FHHL Riser Kit	D	O	x16	x16

Notes:

- D = Default on chassis; O = Optional; N = not supported or slot/connector not present.
- If the Secondary riser is not selected, then the Max PCIe card selection is limited to Qty=1. This is inclusive of all PCIe categories and sub-categories.

HPE Power Supplies

HPE Flexible Slot (Flex Slot) Power Supplies share a common electrical and physical design that allows for hot plug, tool-less
installation into HPE ProLiant Servers. Flex Slot power supplies are certified for high-efficiency operation and offer multiple power
output options, allowing users to "right-size" a power supply for specific server configurations. This flexibility helps to reduce power
waste, lower overall energy costs, and avoid "trapped" power capacity in the data center.

Notes:

- Before making a power supply selection, it is highly recommended that the HPE Power Advisor is run to determine the right size power supply for your server configuration. The HPE Power Advisor is located at: https://poweradvisorext.it.hpe.com/?Page=Indexv
- HPE ProLiant servers ship with an IEC-IEC power cord for rack mounting with Power Distribution Units (PDUs). Visit HPE Power Cords and Cables for a full list of optional power cords.
- Mixing of power supplies is NOT allowed.
- Please refer to “Factory Configuration Setting” section regarding “HPE CE Mark Removal FIO Enablement Kit (P35876-B21)” for non- EU ErP Lot 9 configuration.
- Flex Slot Platinum Plus power supplies support up to 94% power efficiency and include a C-14 power inlet connector that can support HPE Power Discovery Services (blue connector).
- Beginning on January 1st, 2024, units sold into the European Union (EU), European Economic Area (EEA), the United Kingdom, Ireland, Switzerland or Turkey, must include more efficient AC power supplies: 94% for multi-output and 96% for single-output.
- HPE Flexible Slot power supplies are single-output, and part numbers 865438-B21, P03178-B21, and P44712-B21 are 96% efficient, thus meeting requirements.

– HPE is on target to fulfill compliant systems ahead of time and will begin enforcing these requirements in advance to satisfy requests with the current power supplies by the set deadline.

HPE 500W Flex Slot Platinum Hot Plug Low Halogen Power Supply Kit	865408-B21
HPE 800W Flex Slot Platinum Hot Plug Low Halogen Power Supply Kit	P38995-B21
HPE 1000W Flex Slot Titanium Hot Plug Power Supply Kit	P03178-B21
HPE 1600W Flex Slot Platinum Hot Plug Low Halogen Power Supply Kit	P38997-B21

Notes: Only supports high line voltage (200VAC to 240VAC).

HPE 1800W-2200W Flex Slot Titanium Hot Plug Power Supply Kit	P44712-B21
HPE 1600W Flex Slot -48VDC Hot Plug Power Supply Kit	P17023-B21

Notes: Requires selection of HPE 1600W DC PSU power lug option kit or HPE 1600W DC PSU Power Cable Kit.

HPE 1600W -48VDC Power Cable Lug Kit	P36877-B21

Cooling Options

HPE ProLiant DL3X0 Gen11 1U Standard Fan Kit	P48907-B21

Notes: Standard Fan Kit Includes 5 fans.

HPE ProLiant DL3X0 Gen11 1U High Performance Fan Kit	P48908-B21

Notes:

– High Performance Fan Kit Includes 7 fans.
– High Performance Fans required for processors with a TDP to or greater than 185W

HPE ProLiant DL3X0 Gen11 1U 2P Standard Fan Kit	P54697-B21

Notes: 2P Standard Fan Kit Includes 2 fans.

HPE ProLiant DL3X0 Gen11 1U Standard Heat Sink Kit	P48904-B21
HPE ProLiant DL320 Gen11 Performance Heat Sink Kit	P52756-B21

Notes: Performance Heat Sink Required for processors with a TDP to or greater than 185W.

HPE Computation and Graphics Accelerators

NVIDIA L4 24GB PCIe Accelerator for HPE S0K89

Notes:

- For best performance across common workloads, HPE recommends system main memory at least twice the memory of all GPU.
- Requires selection of High-Performance Fan kit. This rule is not applicable for GPU CTO Server.
- If GPU is selected with GPU CTO server then it does not occupy PCIe slot. This must be considered for total PCIe selection.
- Mixing of GPUs is not allowed.
- If Qty=1 Single Wide GPU is selected with GPU CTO Server then 'GPU 4xDC NVMe FIO Kit' or '2 GPU FIO Enable Kit' or '4SW GPU FIO Enable Kit' must be selected.
- If Qty=2 Single Wide GPU is selected with GPU CTO server then '2 GPU FIO Enable Kit' or '4SW GPU FIO Enable Kit' must be selected.
- If Qty=3 or more GPU is selected then '4SW GPU FIO Enable Kit' must be selected.
- 4SW GPU FIO Enable Kit requires selection of Single Wide GPU.

NVIDIA A16 64GB PCIe Non-CEC Accelerator for HPE R8T26C

Notes:

- For best performance across common workloads, HPE recommends system main memory at least twice the memory of all GPU.
- If Qty=2 Double Wide GPU is selected with GPU CTO Server then '2 GPU FIO Enable Kit' must be selected.
- If Qty=1 Double Wide GPU is selected with GPU CTO Server then 'GPU 4xDC NVMe FIO Kit' or '2 GPU FIO Enable Kit' must be selected.
- Supported only with GPU CTO Server.
- Max=2.
- If Qty=1 of A16 GPU is selected, then Primary GPU 8p Power Cable Kit (P62201-B21) must be selected.
- If Qty=2 of A16 GPU is selected, then Primary GPU 8p Power Cable Kit (P62201-B21) and Sec GPU 8p Power Cable Kit (P62203-B21) must be selected.
- Mixing of GPUs is not allowed.
- If 4SW GPU FIO Enable Kit or Qty=2 of Double wide GPU is selected then this option cannot be selected.

NVIDIA L40S 48GB PCIe Accelerator S2L70C

Notes:

- If Qty=2 Double Wide GPU is selected with GPU CTO Server then '2 GPU FIO Enable Kit' must be selected.
- If Qty=1 Double Wide GPU is selected with GPU CTO Server then 'GPU 4xDC NVMe FIO Kit' or '2 GPU FIO Enable Kit' must be selected.
- **Warning:** "For best performance across common workloads, HPE recommends system main memory at least twice the memory of all GPU."
- Supported only with GPU CTO Server.
- If GPU is selected with GPU CTO server then it does not occupy PCIe slot on Primary or Secondary riser. This must be considered for total PCIe selection.
- Max=2.
- Mixing of GPUs is not allowed.

Core Options

- If 4SW GPU FIO Enable Kit or Qty=2 of Double wide GPU is selected then this option cannot be selected.
- If 4516Y+ processor is selected with 4SW GPU FIO Enable Kit or Qty=2 of Double wide GPU, then High performance heat sink must be selected and defaulted.
- If Qty=1 of L40s GPU is selected then Prim GPU 16p Adv Power Kit must be selected.
- If Qty=2 of L40s GPU is selected then Prim GPU 16p Adv Power Kit and Sec GPU 16p Adv Power Kit must be selected.
- These processors (6530,8581V,6554S) and L40s GPU cannot be selected together.
- 128GB DIMM and L40s GPU cannot be selected together.

NVIDIA L40 48GB PCIe Accelerator for HPE S0K90C

Notes:

- For best performance across common workloads, HPE recommends system main memory at least twice the memory of all GPU.
- If Qty=2 Double Wide GPU is selected with GPU CTO Server then ‘2 GPU FIO Enable Kit' must be selected.
- If Qty=1 Double Wide GPU is selected with GPU CTO Server then 'GPU 4xDC NVMe FIO Kit' or '2 GPU FIO Enable Kit' must be selected.
- Supported only with GPU CTO Server.
- If GPU is selected with GPU CTO server then it does not occupy PCIe slot. This must be considered for total PCIe selection.
- Max=2.
- If Qty=1 of L40 GPU is selected, then Prim GPU 16p Power Cable Kit (P62205-B21) must be selected.
- If Qty=2 of L40 GPU is selected, then Primary GPU 16p Power Cable Kit (P62205-B21) and Sec GPU 16p Power Cable Kit (P62207-B21) must be selected.
- Mixing of GPUs is not allowed.
- If 4SW GPU FIO Enable Kit or Qty=2 of Double wide GPU is selected then this option cannot be selected.

GPU Support	Ambient Temperature	Fan Kit
up to 2 L4 or 1 L40/A16 - Front	Up to 35 °C	High Performance Fan kit
up to 2 L4 - Rear	Up to 25 °C	High Performance Fan kit
2 L40/A16 or 4 L4 – Front	Up to 25 °C	High Performance Fan kit

Software as a Service Management

HPE Compute Ops Management

Base SKU

HPE Compute Ops Management Standard 3-year Upfront ProLiant SaaS	R7A11AAE

Upgrade SKUS

HPE Compute Ops Management Standard 5-year Upfront ProLiant SaaS	R7A12AAE
HPE Compute Ops Management Advanced Flex with ProLiant Enablement	S6C28AAE

HPE OneView

HPE OneView including 3yr 24x7 Support Flexible Quantity E-LTU	E5Y35AAE

Notes: For customers purchasing HPE Compute Ops Management, without a hardware purchase or a BTO purchase, use this base SKU within ASQ order:

HPE Compute Ops Management Base SaaS	R6Z73AAE

For more information, visit the HPE Compute Ops Management QuickSpecs:
https://www.hpe.com/psnow/doc/a50004263enw
Supported Servers – CTO only. No OEM. – Complete list can be found here: Latest Supported Server List: https://www.hpe.com/info/com-supported-servers

Additional Options

OS Boot Device

HPE NS204i-u Gen11 NVMe Hot Plug Boot Optimized Storage Device	P48183-B21
HPE ProLiant DL320 Gen11 NS204i-u NVMe OS Boot Device Cable Kit	P52786-B21
HPE ProLiant DL320 Gen11 NS204i-u Security Lock Removal FIO Trigger System Setting	P61855-B21

Notes:

- 'NS204i-u Gen11 Hot Plug Boot Opt Dev' requires the selection of 'NS204i-u cable kit' and vice versa.
- Require High-Performance Fan Kit (P48908-B21).
- HPE NS204i-u Gen11 support is limited at 25C ambient while using GPU CTO server.
- Server must use high performance fan kit when supporting NS204i-u for all CTO Configs.
- Ambient temperature for NS204-u is 25C for GPU CTO server.

Additional Options

HPE Storage Controllers

Storage Controllers

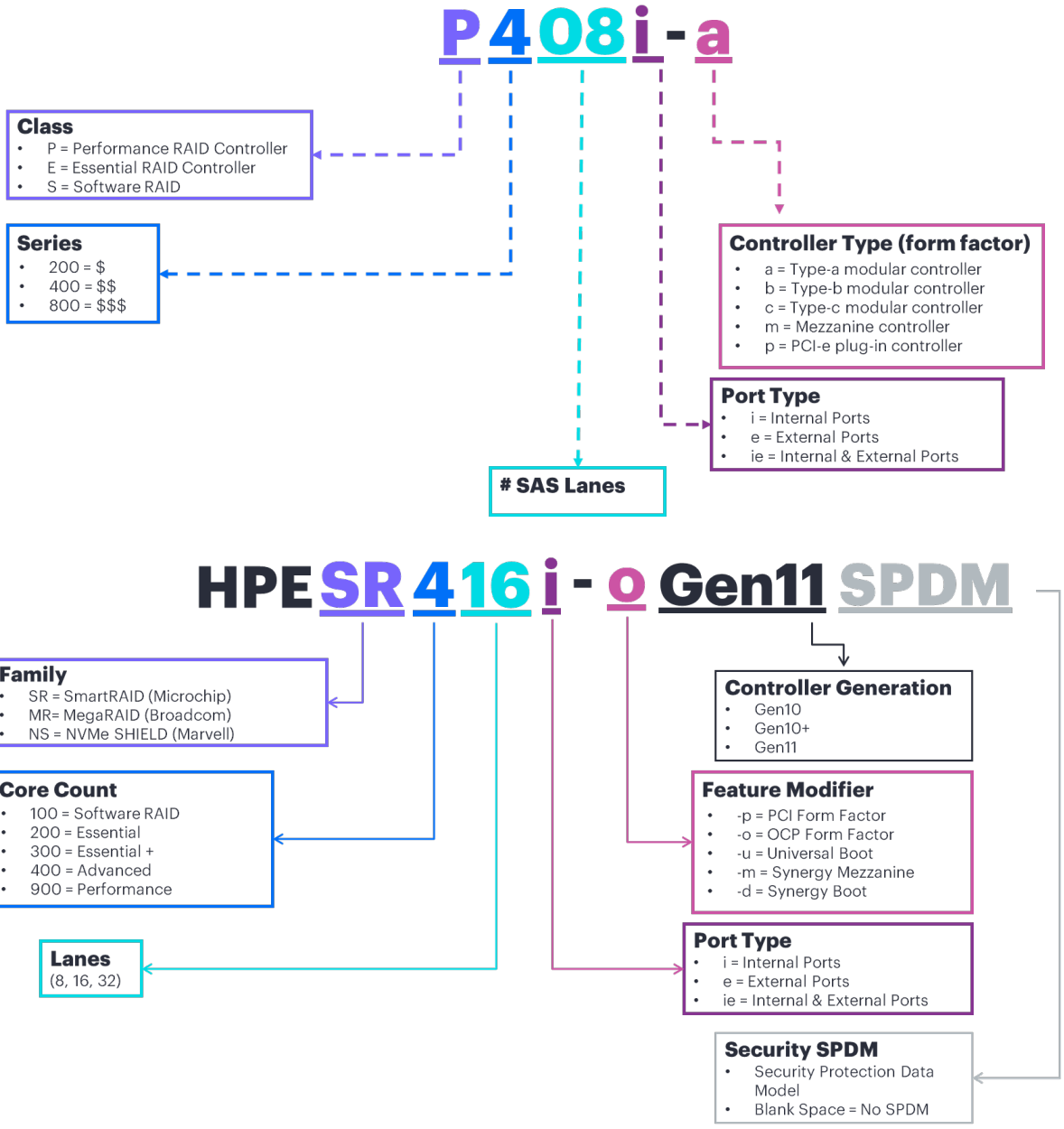

Notes:

- When selecting SR RAID controllers for external storage and MR RAID controllers for internal storage, please be aware these two products use different RAID configuration tools. Therefore, there will be a RAID configuration tool for the SR external controller and another for the MR internal controller.
- Mixing MR (Mega RAID) series internal controllers and SR (Smart RAID) series internal Controllers is not supported.
- For more information on the HPE Gen11 Storage Controller, please refer to the following:

Additional Options

HPE Compute MR Gen11 Controllers QuickSpecs
HPE Compute SR Gen11 Controllers QuickSpecs

Essential RAID Controllers

HPE Smart Array E208e-p SR Gen10 (8 External Lanes/No Cache) 12G SAS PCIe Plug-in Controller	804398-B21

Notes: This controller supports up to 8 SAS/SATA Drives (external)
For more information on the HPE Smart Array E208i-p SR Gen10 Controller, please refer to the QuickSpecs

Tri-Mode Controllers

HPE MR416i-p Gen11 x16 Lanes 8GB Cache PCI SPDM Plug-in Storage Controller	P47777-B21
HPE MR416i-o Gen11 x16 Lanes 8GB Cache OCP SPDM Storage Controller	P47781-B21
HPE MR216i-p Gen11 x16 Lanes without Cache PCI SPDM Plug-in Storage Controller	P47785-B21
HPE MR216i-o Gen11 x16 Lanes without Cache OCP SPDM Storage Controller	P47789-B21
HPE MR408i-o Gen11 x8 Lanes 4GB Cache OCP SPDM Storage Controller	P58335-B21
HPE SR932i-p Gen11 x32 Lanes 8GB Wide Cache PCI SPDM Plug-in Storage Controller	P47184-B21

Notes:
- Max 1 of PCIe internal controller can be selected per server.
- Max 2 of PCIe and OROC internal controllers can be selected per server.
- PCIe Internal controller is not supported with 4LFF CTO Server.
- OROC controllers not supported with 12LFF CTO Server.
- SR932i-p controller is the only controller supported with 8SFF x4 U.2 Drive cage.
- SR932i-p controller can be selected with GPU CTO server only if 8EDSFF drive cage is selected.
- If any controllers are selected, then "HPE 96W Smart Stg Li-ion Batt 145mm Kit" or "HPE Smart Hybrid Capacitor w/ 145mm Cable" must be selected. Vice versa.
- Internal MR-series and Internal SR-series controllers cannot be selected together. Mega RAID Tools cannot be used to script and configure Smart RAID (formerly known as Smart Array) controllers used on HPE Gen9/10/10 Plus/11 servers.
- If MR416i-p/MR216i-p/SR932i-p/MR416i-o/MR216i-o controller is selected along with 8SFF x1 U.3 and 2SFF x4 U.3 drive cage, then one controller is enough to support both the drive cages with the selection of '8SFF cable kit' and '2SFF TM cable kit.'
- If the 8SFF Drive cage is selected with PCIe Internal controller, then the '8SFF TM Cable Kit' must be selected.
- If the 8SFF Drive cage is selected with OROC controller, then '8SFF OROC Cable' must be selected.
- If 8SFF x1 U.3 Drive cage is selected and no Internal controller is selected, then the drive cage will be connected to Direct attach and support SATA Drives only.
- If 8SFF x1 U.3 Drive cage and 2SFF x4 U.3 Drive cage is selected along with Qty=1 of MR216i/MR416i/SR416i/SR932i controller, then 8SFF cable kit OR/AND 2SFF TM cable kit must be selected.
- If 8SFF x4 U.3 Drive cage kit is selected and no Internal controller is selected, then the drive cage will be connected to Direct attach and support NVMe U.3 Drives only.
- If the 2SFF Drive cage is selected with PCIe Internal controller or OROC controller, then the '2SFF TM Cable Kit' must be selected.
- If 2SFF U.3 Drive cage is selected and no Internal controller is selected, then the drive cage will be connected to direct attach and supports either Qty=2 of NVMe U.3 drive or SATA drives.

Additional Options

- If 8SFF x4 U.3 Drive cage is selected with 2SFF U.3 drive cage and no Internal controller is selected, then 2SFF U.3 drive cage can support SATA drives only.
- If 8SFF x4 Drive cage and 2SFF drive cage is selected with Qty=1 of Internal controller, then '8SFF cable kit' or '2SFF TM cable kit' must be selected.
- If 8SFF x4 Drive cage and 2SFF drive cage is selected with Qty=2 of Internal controller, then both '8SFF cable kit' and '2SFF TM cable kit' must be selected.
- If 8SFF x4 Drive cage and 2SFF Drive cage are selected along with MR408i-o controller, then '2SFF TM cable kit' must be selected.
- If SR932i-p is selected with the 8SFF x4 drive cage, the additional 2SFF drive cage will need an extra controller or direct attach.
- MR416i-p is the only controller supported with the GPU Dense CTO server with 4SFF drive cage.
- If SR932i-p/MR416i-p/Gen5 Retimer card is selected along with GPU CTO server then secondary riser must be selected.
- SR932i-p controller can be selected with GPU CTO server only if 8EDSFF drive cage is selected.
- CD7 EDSFF drives requires selection of SR932i-p controller.
- If 8EDSFF drive cage is selected with SR932i-p controller, then 'SR932i-p NVMe Cable Kit' must be selected and defaulted.
- In GPU CTO Server, Mixing of MR416i-p/ Gen5 Retimer card/ SR932i-p controllers are not allowed.

Software RAID

Intel® Virtual RAID on CPU Premium E-RTU for HPE	R7J59AAE

Notes:
- Requires UEFI, not supported on Legacy Mode.
- For NVMe SSDs only, there is no PCIe card support.
- Supports RAID 0/1/5/10.
- Similar to Intel® Virtual RAID on CPU Premium FIO Software for HPE (R7J57A) but intended for field deployments (BTO).

NVMe Adapter

HPE DL385 Gen10 Plus 12Gb NVMe 1-port Adapter	P25526-B21
HPE DL385 Gen10 Plus 12Gb NVMe 2-port Adapter	P25527-B21

Notes: The naming is based on HPE ProLiant DL385 Gen10 Plus. However, this option is incompatible with HPE ProLiant DL320 Gen11 as well.

HPE Cable Kits

Notes: Some options may not be integrated at the factory. To ensure only valid configurations are ordered, Hewlett Packard Enterprise recommends using an HPE-approved configurator. Contact your local sales representative for additional information.

HPE ProLiant DL320 Gen11 8SFF Tri-Mode Cable Kit	P52775-B21
HPE ProLiant DL320 Gen11 2SFF Tri-Mode Cable Kit	P52776-B21
HPE ProLiant DL320 Gen11 Retimer Card Cable Kit	P52777-B21
HPE ProLiant DL320 Gen11 8SFF OROC Cable Kit	P52780-B21
HPE ProLiant DL320 Gen11 10LFF Direct Attach Cable Kit	P59459-B21
HPE ProLiant DL320 Gen11 12LFF Tri-Mode Cable Kit	P60892-B21

Additional Options

Notes: Customers can self-install the 12LFF tri-mode cable kit. However, due to the complexity involved, HPE recommends customers to call HPE service.

HPE ProLiant DL320 Gen11 2x MR416i-p 8SFF Controller Cable Kit P66963-B21

Notes:
- Max=1 of 8SFF Cable kit can be selected.
- Not Supported with GPU CTO Server.
- If 8SFF x4 U.3 drive cage is selected along with Qty=2 of MR416i-p then 8SFF 2x MR416i-p Controller Cable Kit must be selected.
- 8SFF 2x MR416i-p Controller Cable Kit Requires selection of 8SFF x4 U.3 drive cage and Qty=2 of MR416i-p controller.
- If 8SFF x4 U.3 drive cage and 2SFF U.3 drive cage is selected along with Qty=2 of MR416i-p controller and 8SFF 2x MR416i-p Controller Cable Kit and no other internal controller is selected then 2SFF x4 U.3 drive cage will be connected to Direct attach and supports either Qty=2 of NVMe U.3 drives or SATA drives.
- Max=1 is not applicable to MR416i-p controller if selected along with 8SFF x4 U.3 drive cage and 8SFF 2x MR416i-p Controller Cable Kit . Max=2 of MR416i-p must be selected for this combination.

HPE ProLiant DL320 Gen11 LFF Optical Cable Kit P54641-B21

Notes: Required if Optical Drive is selected with 4LFF CTO Server.

HPE ProLiant DL320/DL380 Gen11 PCIe Gen5 Retimer Card P48833-B21

Notes:
- Supported only with GPU CTO Server.
- If 4SFF U.3 drive cage is selected with Gen5 Retimer card, then 'HPE DL320 Gen11 4SFF TM Cable Kit' must be selected and defaulted.
- In GPU CTO Server, Mixing of MR416i-p/ Gen5 Retimer card/ SR932i-p controllers are not allowed.
- RAID is allowed on EDSFF drives only if Premium VROC or Standard VROC or Gen5 Retimer card is selected as Primary controller.
- If 8EDSFF Drive cage is selected with Gen5 Retimer card then HPE DL320 Gen11 2xType-p NVMe Cable Kit must be selected and defaulted.
- If 8EDSFF Drive cage is selected with Gen5 Retimer card, then Qty=2 Gen5 Retimer card must be selected and defaulted.
- CD7 EDSFF drives requires selection of Gen5 Retimer card or SR932i-p controller.
- If SR932i-p/MR416i-p/Gen5 Retimer card is selected along with GPU CTO server then secondary riser must be selected.

HPE ProLiant DL320 Gen11 GPU 4x Direct Connected NVMe FIO Enablement Kit P62181-B21

Notes:
- Supported only with GPU CTO Server.
- If 8EDSFF or 4SFF Drive cage is selected and MR416i-p is not selected, then "HPE DL320 G11 GPU 4xDC NVMe FIO Kit" must be selected.
- If 8EDSFF Drive cage is selected with "HPE DL320 G11 GPU 4xDC NVMe FIO Kit" then drive cage will be connected to Direct attach and can support Max=4 EDSFF drives only.
- If 4SFF U.3 Drive cage is selected with "HPE DL320 G11 GPU 4xDC NVMe FIO Kit" then drive cage will be connected to direct attach and support Max=4 NVMe U.3 drives only.

Additional Options

- Cannot be selected if MR416i-p controller is selected.
- Max=1 of 'GPU 4xDC NVMe FIO Kit' or '4SFF TM Cable Kit' or '2xType-p NVMe Cable Kit' can be selected.
- If Qty=1 of GPU is selected with GPU CTO Server, then 'GPU 4xDC NVMe FIO Kit' or '2 GPU FIO Enable Kit' must be selected.
- In GPU CTO Server if 'GPU 4xDC NVMe FIO Kit' then the first GPU card selected will be installed in the front of the server. This should not be considered for total PCIe selection.

HPE ProLiant DL320 Gen11 2 GPU FIO Enablement Kit P62197-B21

Notes:
- If Qty=1 Double Wide GPU is selected with GPU CTO Server, then 'GPU 4xDC NVMe FIO Kit' or '2 GPU FIO Enable Kit' must be selected.
- If Qty=2 Double Wide GPU is selected with GPU CTO Server, then '2 GPU FIO Enable Kit' must be selected.
- Cannot be selected with any other GPU enablement kit.
- If '2 GPU FIO Enable Kit' is selected along with 4SFF Drive cage, then MR416i-p controller or Gen5 Retimer card and 4SFF TM Cable Kit must be selected.
- If Qty=1 Single Wide GPU is selected with GPU CTO Server, then 'GPU 4xDC NVMe FIO Kit' or '2 GPU FIO Enable Kit' or '4SW GPU FIO Enable Kit' must be selected.
- If Qty=2 Single Wide GPU is selected with GPU CTO server then '2 GPU FIO Enable Kit' or '4SW GPU FIO Enable Kit' must be selected.

HPE ProLiant DL320 Gen11 Serial Port Enablement Kit P58829-B21

Notes: Max = 1

HPE ProLiant DL320 Gen11 Primary GPU 8-pin Power Cable Kit P62201-B21

HPE ProLiant DL320 Gen11 Secondary GPU 8-pin Power Cable Kit P62203-B21

HPE ProLiant DL320 Gen11 Primary GPU 16-pin Power Cable Kit P62205-B21

HPE ProLiant DL320 Gen11 Secondary GPU 16-pin Power Cable Kit P62207-B21

Notes:
- P62205-B21 & P62207-B21 require selection of L40 GPU.
- If Qty=1 of L40 GPU is selected, then Primary GPU 16p Power Cable Kit (P62205-B21) must be selected.
- If Qty=2 of L40 GPU is selected, then Primary GPU 16p Power Cable Kit (P62205-B21) and Secondary GPU 8p Power Cable Kit (P62207-B21) must be selected.
- P62201-B21 & P62203-B21 require selection of A16 GPU.
- If Qty=1 of A16 GPU is selected, then Primary GPU 8p Power Cable Kit (P62201-B21) must be selected.
- If Qty=2 of A16 GPU is selected, then Primary GPU 8p Power Cable Kit (P62201-B21) and Secondary GPU 8p Power Cable Kit (P62203-B21) must be selected.

HPE ProLiant DL320 Gen11 Primary GPU 16-pin Advanced Power Cable Kit P69104-B21

HPE ProLiant DL320 Gen11 Secondary GPU 16-pin Advanced Power Cable Kit P69106-B21

Notes:
- If Qty=1 of L40s GPU is selected then Prim GPU 16p Adv Power Kit must be selected.
- If Qty=2 of L40s GPU is selected then Prim GPU 16p Adv Power Kit and Sec GPU 16p Advanced Power Kit must be selected.
- Requires selection of L40s GPU.

Additional Options

HPE ProLiant DL320 Gen11 4SFF Tri-Mode Cable Kit P62189-B21

Notes:
- Supported only with GPU CTO Server.
- If 4SFF U.3 drive cage is selected with MR416i-p controller, then 'HPE DL320 Gen11 4SFF TM Cable Kit.'
- Requires selection 4SFF U.3 Drive cage.
- Max=1 of 'GPU 4xDC NVMe FIO Kit' or '4SFF TM Cable Kit' can be selected.

HPE ProLiant DL320 Gen11 2x Type-p NVMe Cable Kit P62183-B21

Notes:
- Supported only with GPU CTO Server.
- Requires selection of Gen5 Retimer card.
- Requires selection of 8EDSFF Drive cage.
- Max=1 of these kits is allowed for selection GPU 4xDC NVMe FIO Kit or 4SFF TM Cable Ki or Gen5 Retimer cable
- If 8EDSFF Drive cage is selected with Gen5 Retimer card then HPE DL320 Gen11 2xType-p NVMe Cable Kit must be selected and defaulted.

HPE ProLiant DL320 Gen11 SR932i-p NVMe Cable Kit P62185-B21

Notes:
- Supported only with GPU CTO Server.
- Requires selection of 8EDSFF Drive cage.
- Max=1 of these kits is allowed for selection GPU 4xDC NVMe FIO Kit or 4SFF TM Cable Ki or Gen5 Retimer cable.
- If 8EDSFF drive cage is selected with SR932i-p controller, then 'SR932i-p NVMe Cable Kit' must be selected and defaulted.
- Requires selection of SR932i-p controller.

Embedded Management

HPE iLO Advanced

HPE iLO Advanced Electronic License with 1yr Support on iLO Licensed Features	E6U59ABE
HPE iLO Advanced 1-server License with 1yr Support on iLO Licensed Features	512485-B21
HPE iLO Advanced AKA Tracking License with 1yr Support on iLO Licensed Features	512487-B21
HPE iLO Advanced Electronic License with 3yr Support on iLO Licensed Features	E6U64ABE
HPE iLO Advanced 1-server License with 3yr Support on iLO Licensed Features	BD505A
HPE iLO Advanced AKA Tracking License with 3yr Support on iLO Licensed Features	BD507A

HPE Converged Infrastructure Management Software

HPE OneView including 3yr 24x7 Support Flexible Quantity E-LTU E5Y35AAE

Notes: Licenses ship without media. The HPE OneView Media Kit can be ordered separately or downloaded.

Additional Options

HPE Security

HPE iLO Common Password FIO Setting P08040-B21

Notes:

- Replaces iLO default randomized password with an HPE-defined common password. HPE highly recommends changing this password immediately after the initial onboarding process.
- Customers who want to choose their own custom iLO default password should use the HPE Factory Express Integration Services.

HPE Bezel Lock Kit 875519-B21

Notes: Requires the bezel kit (P50450-B21).

HPE ProLiant Gen11 1U Common Bezel Kit P50450-B21

HPE ProLiant DL320 Gen11 Intrusion Detection Cable Kit P55417-B21

Optional Upgrades

HPE 96W Smart Storage Lithium-ion Battery with 145mm Cable Kit P01366-B21

HPE Smart Storage Hybrid Capacitor with 145mm Cable Kit P02377-B21

Notes: Provides backup power for multiple HPE storage controllers or other devices.

HPE Tape Backup

For the complete range of tape drives, autoloaders, libraries, and media, see: https://www.hpe.com/us/en/storage/storeever-tape-storage.html For hardware and software compatibility of Hewlett Packard Enterprise tape backup products http://www.hpe.com/storage/BURAcompatibility

HPE Racks

- Please see the HPE Advanced Series Racks QuickSpecs for information on additional racks options and rack specifications. HPE G2 Advanced Series Racks
- Please see the HPE Enterprise Series Racks QuickSpecs for information on additional racks options and rack specifications. HPE G2 Enterprise Series Racks

HPE Power Distribution Units (PDUs)

- Please see the HPE Basic Power Distribution Units (PDU) QuickSpecs for information on these products and their specifications.
- Please see the HPE Metered Power Distribution Units (PDU) QuickSpecs for information on these products and their specifications. Please see the HPE Intelligent Power Distribution Unit (PDU) QuickSpecs for information on these products and their specifications.
- Please see the HPE Metered and Switched Power Distribution Units (PDU) QuickSpecs for information on these products and their specifications.

Uninterruptible Power Systems (UPS)

- To learn more, please visit the HPE Uninterruptible Power Systems (UPS) web page.
- Please see the HPE Direct Flow Three Phase Uninterruptible Power System QuickSpecs for information on these products and their specifications.
- Please see the HPE Line Interactive Single-Phase UPS QuickSpecs for information on these products and their specifications.

HPE Rack Options

Please see the HPE KVM Switches web page for information on these products and their specifications.

Easy Install Rail Kits

Easy Install rail kits contain telescoping rails, which allow for in-rack serviceability.

To assist in installing the server into the rack, an optional installation tool is available by contacting your local services representative.

Notes:

- Hewlett Packard Enterprise recommends that a minimum of two people are required for all Rack Server installations. Please refer to your installation instructions for proper tools and the number of people to use for any installation.
- HPE rail kits are designed to work with HPE racks in compliance with industry standard EIA-310-E. In the event a customer elects to purchase a third-party rack for use with an HPE rail kit, any such use is at customer's own risk. HPE makes no express or implied warranties with respect to such third-party racks and specifically disclaims any implied warranties of merchantability and fitness for a particular purpose. Furthermore, HPE has no obligation and assumes no liability for the materials, design, specifications, installation, safety, and compatibility of any such third-party racks with any rail kits, including HPE rail kits.

HPE USB and SD Options

Notes: In vSphere 7.0, VMware made changes that impact the use of an SD Card/USB media as a standalone boot device and will be removing support for them after version 7.x.
SD Card/USB media can still be used as a standalone boot option through all 7.x releases via published Customer Advisory Usage of SD Card/USB Devices As Standalone Boot Devices Has Changed Due to System Storage Changes For VMware ESXi 7.0 (Or Later).
For any major release beyond VMware ESXi 7.x, VMware will require M.2 or another local persistent device as the standalone boot option.

Additional Options

HPE Support Service

Installation & Startup Services

HPE ProLiant DL/ML Install Service	U4554E
HPE ProLiant DL/ML Ons Startup Service	U4555E

Tech Care

HPE 3 Year Tech Care Essential DL320 Gen11 HW Service	H93M2E
HPE 3 Year Tech Care Essential wDMR DL320 Gen11 HW Service	H93M3E
HPE 5 Year Tech Care Essential DL320 Gen11 HW Service	H93P6E
HPE 5 Year Tech Care Essential wDMR DL320 Gen11 HW Service	H93P7E

Memory Population guidelines

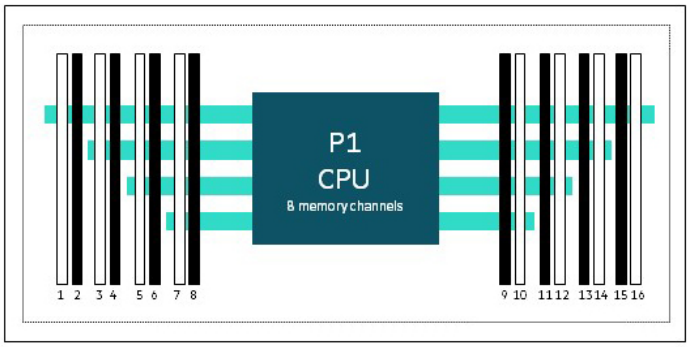

HPE ProLiant DL320 Gen10 Plus

HPE ProLiant Gen10 Plus 16 slot per CPU DIMM population order																
DIMM population order																
DIMM slot	**1**	**2**	**3**	**4**	**5**	**6**	**7**	**8**	**9**	**10**	**11**	**12**	**13**	**14**	**15**	**16**
1 DIMM										10						
2 DIMMs[1]			3							10						
4 DIMMs[1]			3				7			10				14		
6 DIMMs			3		5		7			10				14		16
8 DIMMs[1,2]	1		3		5		7			10		12		14		16
12 DIMMs	1	2	3		5	6	7			10	11	12		14	15	16
16 DIMMs[1,2]	1	2	3	4	5	6	7	8	9	10	11	12	13	14	15	16

Notes:

- Cells without entries represent configurations not supported, and if populated, the server may result in non-optimal memory performance or other unexpected behavior.
- [1] Supports Hemi (hemisphere mode).
- [2] Supports Software Guard Extensions (SGX).

General Memory Population Rules and Guidelines

- Install DIMMs only if the corresponding processor is installed.
- If only one processor is installed in a two-processor system, only half of the DIMM slots are available.
- To maximize performance, it is recommended to balance the total memory capacity between all installed processors.
- When two processors are installed, balance the DIMMs across the two processors.
- White DIMM slots denote the first slot to be populated in a channel.
- Mixing of DIMM types (UDIMM, RDIMM, and LRDIMM) is not supported.
- The maximum memory speed is a function of the memory type, memory configuration, and processor model.
- The maximum memory capacity is a function of the number of DIMM slots on the platform, the largest DIMM capacity qualified on the platform, and the number and model of installed processors qualified on the platform.
- For details on the HPE Server Memory Options Population Rules, visit: http://www.hpe.com/docs/memory-population-rules
- To realize the performance memory capabilities listed in this document, HPE DDR5 Smart Memory is required. For additional information, please see the HPE DDR5 Smart Memory QuickSpecs.

Notes: The maximum memory speed is a function of the memory type, memory configuration, and processor model.

For details on the HPE Server Memory speed, visit: https://www.hpe.com/docs/server-memory

Storage

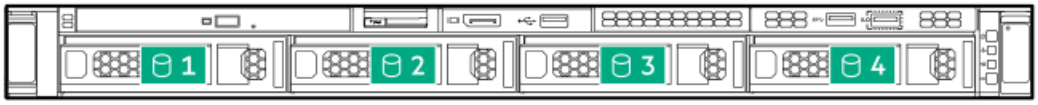

4 LFF device bay numbering

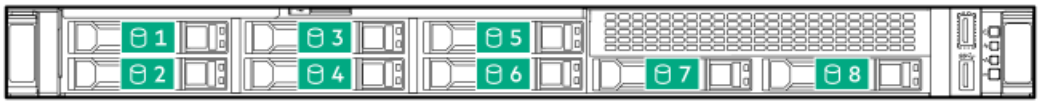

8 SFF drive bay numbering

8 SFF + 2 SFF drive bay numbering

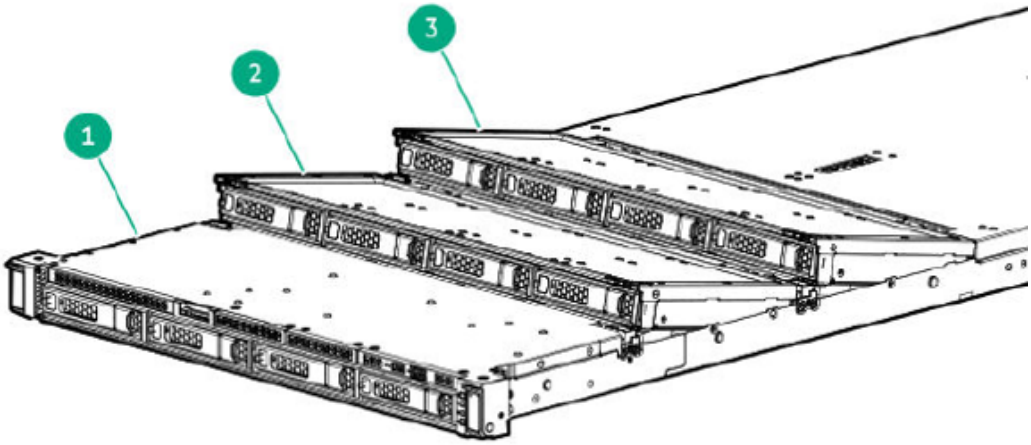

12 LFF drive bay positioning

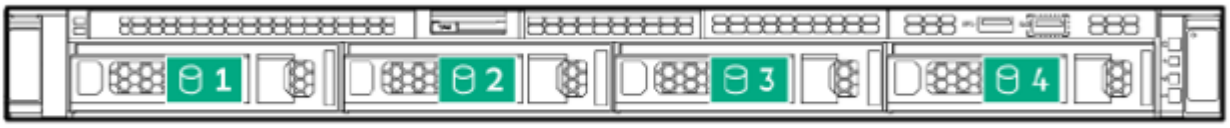

12 LFF drive bay – Box1 numbering

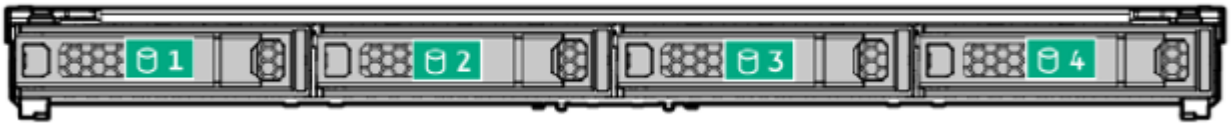

12 LFF drive bay - Box3/Box5 numbering

System Unit

Dimensions (Height x Width x Depth)

8 SFF
- 4.28 x 43.46 x 60.51 cm.
  1.69 x 17.11 x 23.82 in.

4 LFF CTO Server
- 4.28 x 43.46 x 66.47 cm.
  1.69 x 17.11 x 26.17 in.

12 LFF CTO Server[1]
- 4.28 x 43.46 x 99.51 cm.
  1.69 x 17.11 x 39.18 in.

GPU Dense CTO
- 4.28 x 43.46 x 77.42 cm.
  1.69 17.11 x 30.48 in.

Notes: [1]12 LFF CTO Server requires 1200mm depth rack for proper mounting.

Weight (approximate)

- **8+2 SFF minimum**
  - **12.00 kg (26.45 lb)**: One Drive, one DIMM, one PCIe card, one processor, one heatsink, one power supply, five fans, and two fan blanks.
- **8+2 SFF maximum**
  - **16.71 kg (36.81 lb)**: Ten drives, sixteen DIMMs, two PCIe cards. one processor, one heatsink, two power supplies, and seven fans.
- **4 LFF minimum**
  - **13.20 kg (29.10 lb)**: One drive, one DIMM, one PCIe card, one processor, one heatsink, one power supply, five fans, and two fan blanks.
- **4 LFF maximum**
  - **17.70 kg (39.02 lb)**: Four drives, sixteen DIMMs, and two PCIe standup cards. One processor, one heatsink, two power supplies, and seven fans.
- **12 LFF minimum**
  - **18.70 kg (41.00 lb**): One Drive, one DIMM, one PCIe card, one processor, one heatsink, one power supply, five fans, and two fan blanks.
- **12 LFF maximum**
  - **29.60 kg (65.23 lb**): Twelve drives, sixteen DIMMs, two PCIe cards. one processor, one heatsink, two power supplies, and seven fans.
- **GPU Dense minimum**
  - **14.70 kg (32.41 lb)**: One Drive, one DIMM, one PCIe card, one processor, one heatsink, one power supply, five fans, and two fan blanks.
- **GPU Dense maximum**
  - **20.90 kg (46.08 lb)**: Eight drives, sixteen DIMMs, two PCIe cards. one processor, one heatsink, two power supplies, and seven fans.

Input Requirements (per power supply)

Rated Input Voltage

- 1800-2200 W (Titanium).
- 1600 W (-48 VDC).
- 1600 W (Platinum).
- 1000 W (Titanium).
- 800 W (Platinum).
- 500 W (Platinum) 100-240 VAC.

BTU Rating

Maximum

- For 1600 W (Platinum)Power Supply: 5918 BTU/hr (at 200 VAC), 5891 BTU/hr (at 230 VAC).
- For 1600 W (48VDC) Power Supply: 6026 BTU/hr (at -40 VDC), 6000 BTU/hr (at -48 VDC), 5989 BTU/hr (at -72 VDC).
- For 1000 W (Titanium) Power Supply: 3764 BTU/hr (at 100 VAC), 3629 BTU/hr (at 200 VAC).
- For 800 W (Platinum) Power Supply: 3067 BTU/hr (at 100 VAC), 2958 BTU/hr (at 200 VAC), 2949 BTU/hr (at 240 VAC) China only.
- For 500 W (Platinum) Power Supply: 1999 BTU/hr (at 100 VAC), 1912 BTU/hr (at 200 VAC), 1904 BTU/hr (at 240 VAC) for China only.

Power Supply Output (per power supply)

Rated Steady-State Power

- For 1600 W (Platinum)Power Supply: 1600 W (at 200 VAC to 240 VAC input), 1600 W (at 240 VDC input).
- For 1600 W (48VDC) Power Supply: 1600 W (at -40 VDC to -72 VDC).
- For 1000 W (Titanium) Power Supply: 1000 W (at 100 VAC to 127 VAC), 1000 W (at 200 VAC to 240 VAC input).
- For 800 W (Platinum) Power Supply: 800 W (at 100 VAC to 127 VAC input), 800 W (at 100 VAC to 240 VAC input), 800 W (at 240 VDC input for China only).
- 3067 BTU/hr (at 100 VAC), 2958 BTU/hr (at 200 VAC), and 2949 BTU/hr (at 240 VAC), China only.
- For 500 W (Platinum) Power Supply: 500 W (at 100 - 127 VAC input), 500 W (at 100 - 240 VAC input), 500 W (100 VAC - 127 VAC input).

Maximum Peak Power

- For 1600 W (Platinum)Power Supply: 1600 W (at 200 VAC to 240 VAC input), 1600 W (at 240 VDC input).
- For 1600 W (48VDC) Power Supply: 1600 W (at -40 VDC to -72 VDC).
- For 1000 W (Titanium) Power Supply: 1000 W (at 100 VAC to 127 VAC), 1000 W (at 200 VAC to 240 VAC input).
- For 800 W (Platinum) Power Supply: 800 W (at 100 VAC to 127 VAC input), 800 W (at 100 VAC to 240 VAC input), 800 W (at 240 VDC input for China only).
- For 500 W (Platinum) Power Supply: 500 W (at 100 - 127 VAC input), 500 W (at 100 - 240 VAC input), 500 W (100 VAC - 127 VAC input).

System Inlet Temperature

- **Standard Operating Support**
  10 ° to 35 °C (50 ° to 95 °F) at sea level with an altitude derating of 1.0°C per every 305 m (1.8°F per every 1000 ft) above sea level to a maximum of 3050 m (10,000 ft), no direct sustained sunlight. The maximum rate of change is 20°C/hr (36°F/hr). The upper limit and rate of change may be limited by the type and number of options installed.
  System performance during standard operating support may be reduced if operating with a fan fault or above 30 °C (86 °F).
- **Extended Ambient Operating Support**
  For approved hardware configurations, the supported system inlet range is extended to be: 5 ° to 10 °C (41 ° to 50 °F) and 35 ° to 40 °C (95 ° to 104 °F) at sea level with an altitude derating of 1.0°C per every 175 m (1.8 °F per every 574 ft) above 900 m (2953 ft) to a maximum of 3050 m (10,000 ft). The approved hardware configurations for this system are listed at the URL: https://www.hpe.com/support/ASHRAEGen11
  40 °C to 45 °C (104 °F to 113 °F) at sea level with an altitude derating of 1.0°C per every 125 m (1.8 °F per every 410 ft) above 900 m (2953 ft) to a maximum of 3050 m (10,000 ft). The approved hardware configurations for this system are listed at the URL: https://www.hpe.com/support/ASHRAEGen11
  System performance may be reduced if operating in the extended ambient operating range or with a fan fault.
- **Non-operating**
  -30 ° to 60 °C (-22 ° to 140 °F). The maximum rate of change is 20 °C/hr (36 °F/hr).

Relative humidity (non-condensing)

- **Operating**
  8% to 90% - Relative humidity (Rh), 28 °C (82.4 °F) maximum wet bulb temperature, non-condensing.
- **Non-operating**
  5 to 95% relative humidity (Rh), 38.7 °C (101.7 °F) maximum wet bulb temperature, non-condensing.

Altitude

- **Operating**
  3050 m (10,000 ft). This value may be limited by the type and number of options installed. The maximum allowable altitude change rate is 457 m/min (1500 ft/min).
- **Non-operating**
  9144 m (30,000 ft). The maximum allowable altitude change rate is 457 m/min (1500 ft/min).

Emissions Classification (EMC)

To view the regulatory information for your product, view the Safety and Compliance Information for Server, Storage, Power, Networking, and Rack Products, available at the Hewlett Packard Enterprise Support Center: https://support.hpe.com/hpesc/public/docDisplay?docLocale=en_US&docId=c03471072

Acoustic Noise

Listed are the declared mean A-Weighted sound power levels (LWA,m), declared average bystander position A-Weighted sound pressure levels (LpAm), and the statistical adder for verification, Kv, is a quantity to be added to the declared mean A-weighted sound power level, LWA,m when the product is operating in a 23°C ambient environment. Noise emissions were measured in accordance with ISO 7779 (ECMA 74) and declared in accordance with ISO 9296 (ECMA 109). The listed sound levels apply to standard shipping configurations. Additional options may result in increased sound levels. Please have your HPE representative provide information from the HPE EMESC website for further technical details regarding the configurations listed below.

Test case	Entry 1 (BTO) 4LFF	Entry 2 (BTO) SFF	Mid Range (BTO) SFF	Performance (BTO) SFF
Idle				
LWA,m	4.7 B	4.7 B	4.9 B	4.9 B
LpAm	36 dBA	35 dBA	37 dBA	37 dBA
Kv	0.4 B	0.4 B	0.4 B	0.4 B
Operating				
LWA,m	5.3 B	4.9 B	5.1 B	5.2 B
LpAm	39 dBA	36 dBA	38 dBA	40 dBA
Kv	0.4 B	0.4 B	0.4 B	0.4 B

Notes:

- The Acoustics levels presented here are generated by the test configuration only. Acoustics levels will vary depending on system configuration. Values are subject to change without notification and are for reference only.
- The declared mean A-weighted sound power level, LWA,m, is computed as the arithmetic average of the measured values.
- A-weighted sound power levels for a randomly selected sample rounded to the nearest 0,1 B.
- The declared mean A-weighted emission sound pressure level, LpA,m, is computed as the arithmetic average of the measured A-weighted emission sound pressure levels at the bystander positions for a randomly selected sample, rounded to the nearest 1 dB.
- The statistical adder for verification, Kv, is a quantity to be added to the declared mean A-weighted sound power level, LWA,m, such that there will be a 95 % probability of acceptance when using the verification procedures of ISO 9296 if no more than 6,5 % of the batch of new equipment, has A-weighted sound power levels greater than (LWA,m + Kv).
- The quantity, LWA,c (formerly called LWAd), can be computed from the sum of LWA,m, and Kv.
- All measurements were made to conform to ISO 7779 / ECMA-74 and declared to conform to ISO 9296 / ECMA-109.
- B, dB, abbreviations for bels and decibels, respectively, where 1 B = 10 dB.
- The results in this declaration apply only to the model numbers listed above when operating and tested according to the indicated modes and standards. A system with additional configuration components or increased operating functionality may increase the noise emission values.
- The system under abnormal conditions may increase the noise level, and people in the vicinity of the product [cabinet] for extended periods should consider wearing hearing protection or using other means to reduce noise exposure.

Environmentally friendly Products and Approach End-of-life Management and Recycling

Hewlett Packard Enterprise offers end-of-life product return, trade-in, and recycling programs, in many geographic areas, for our products. Products returned to Hewlett Packard Enterprise will be recycled, recovered, or disposed of in a responsible manner.

The European Union Waste Electrical and Electronic Equipment Directive [EU WEEE] (2002/95/EC) requires manufacturers to provide treatment information for each product type for use by treatment facilities. This information (product disassembly instructions) is posted on the Hewlett Packard Enterprise website. These instructions may be used by recyclers and other WEEE treatment facilities, as well as Hewlett Packard Enterprise OEM customers who integrate and re-sell Hewlett Packard Enterprise equipment.

Summary of Changes

Date	Version History	Action	Description of Change
05-Oct-2026	Version 42	Changed	Core Optiosn section was updated.
03-Aug-2026	Version 41	Changed	Core Options section was updated.
		Removed	HPE InfiniBand and Read Intensive - NVMe - SFF - Solid State Drives obsolete SKUs.
06-Jul-2026	Version 40	Changed	Core Options section was updated
		Added	Mixed Use - NVMe – EDSFF E3.S 1T Read Intensive – NVMe - EDSFF E3.S 1T
		Removed	Mixed Use –24G SAS - SFF - Solid State Drives Read Intensive - 6G SATA - SFF - Solid State Drives
01-Jun-2026	Version 39	Changed	Core Options
		Removed	Pre-Configured Models Section HPE Compute Ops Management 1-Year Upgrade SKU Read Intensive - 6G SATA - SFF - Solid State Drives
04-May-2026	Version 38	Changed	Core Options section was updated.
		Added	NVMe Gen5 – Read Intensive: Read Intensive – NVMe – EDSFF - Solid State Drives and Mixed Use – NVMe – EDSFF - Solid State Drives
		Removed	Read Intensive –24G SAS - SFF - Solid State Drives obsolete SKUs.
06-Apr-2026	Version 37	Changed	Standard Features section was updated.
		Added	Memory F21 configuration rules.
02-Mar-2026	Version 36	Changed	Service and Support section was updated.
		Added	Updated GreenLake statement.
02-Feb-2026	Version 35	Changed	Configuration Information, Core Options section was updated
		Added	Midline - 6G SATA - LFF Drives, Midline - 12G SAS - LFF Drives
		Removed	4th Generation Intel® Xeon®-Gold 6, 4th Generation Intel® Xeon®-Gold 5, 4th Generation Intel® Xeon®-Bronze, Midline - 6G SATA - LFF Drives, Midline - 12G SAS - LFF Drives, and Read Intensive - M.2 - Solid State Drives obsolete SKUs.
05-Jan-2026	Version 34	Changed	Core Options section was updated.
		Removed	HDD obsolete SKUs.
01-Dec-2025	Version 33	Changed	Core Options section was updated.
		Removed	HPE InfiniBand and Read Intensive - NVMe - SFF - Solid State Drives obsolete SKUs.
10-Nov-2025	Version 32	Changed	Pre-Configured Models and Core Options sections were updated.
		Added	Read Intensive - NVMe - SFF - Solid State Drives SKUs
		Removed	Pre-Configured Models and HPE InfiniBand obsolete SKUs
28-Jul-2025	Version 31	Changed	Update survey link.
02-Jun-2025	Version 30	Changed	Core Options section was updated. Added: Intel® Xeon® 6® Socket Scalable (4S, 8S) SKUs.
05-May-2025	Version 29	Changed	Core Options section was updated. Added: VROC - Solid State Drives SKUs, Read Intensive - M.2 - Solid State Drives SKUs, Software as a Service Management Enablement SKU (COM) and European Union ErP Lot 9 Regulation section to include Turkey and Ireland.

Summary of Changes

Date	Version History	Action	Description of Change
14-Apr-2025	Version 28	Changed	Core Options section was updated. Added: Read Intensive – NVMe – EDSFF - Solid State Drives SKU. Removed: 200 Gigabit Ethernet Adapters OBS SKU.
03-Mar-2025	Version 27	Changed	Core Options section was updated. Added: QuickSpecs Survey. Removed: Midline - 12G SAS - LFF Drives SKU and Midline - 6G SATA - SFF Drives SKU.
06-Jan-2025	Version 26	Changed	Optional Features and Core Options sections were updated.
02-Dec-2024	Version 25	Changed	Core Options section was updated.
07-Oct-2024	Version 24	Changed	Core Options section was updated.
03-Sep-2024	Version 23	Changed	Standard Features (Operating Systems and Virtualization Software Support for HPE Servers) and Pre-Configured Models sections were updated.
05-Aug-2024	Version 22	Changed	Pre-Configured Models (TPM China), Core Options and Additional Options sections were updated.
01-Jul-2024	Version 21	Changed	Pre-Configured Models and Configuration Information sections were updated.
03-Jun-2024	Version 20	Changed	Core Options section was updated.
06-May-2024	Version 19	Changed	Core Options section was updated.
01-Apr-2024	Version 18	Changed	Standard Features, Configuration Information, Core Options and Additional Options sections were updated
04-Mar-2024	Version 17	Changed	Standard Features, Configuration Information, Core Options and Additional Options sections were updated
05-Feb-2024	Version 16	Changed	Configuration Information and Core Options sections were updated
14-Dec-2023	Version 15	Changed	Overview, Standard Features, Configuration Information, Core Options and Additional Options sections were updated
13-Nov-2023	Version 14	Changed	Pre-configured Models Section was updated.
06-Nov-2023	Version 13	Changed	Service and Support, Configuration Information and Additional Options sections were updated
02-Oct-2023	Version 12	Changed	Overview and Core Options sections were updated.
05-Sep-2023	Version 11	Changed	Standard Features, Configuration Information, Core Options and Additional Options sections were updated
07-Aug-2023	Version 10	Changed	Standard Features,Core Options and Additional Options sections were updated
17-Jul-2023	Version 9	Changed	Overview section was updated.
10-Jul-2023	Version 8	Changed	Standard Features, Pre-Configured , Configuration Information and Additional Options sections were updated
05-Jun-2023	Version 7	Changed	Standard Features, Pre-Configured , Configuration Information and Additional Options sections were updated.
01-May-2023	Version 6	Changed	Standard Features, and Core Options sections were updated.
17-Apr-2023	Version 5	Changed	Overview, Standard Features, and Optional Features sections were updated.
03-Apr-2023	Version 4	Changed	Pre-Configured and Core Options section were updated.

Summary of Changes

Date	Version History	Action	Description of Change
06-Mar-2023	Version 3	Changed	Overview, Standard Features, Configuration Information, Additional Options and Technical Specifications sections were updated.
06-Feb-2023	Version 2	Changed	Overview, Core Options, and Storage Options sections were updated.
10-Jan-2023	Version 1	New	New QuickSpecs.

Copyright

Have feedback on QuickSpecs? We're listening

Chat now

© Copyright 2026 Hewlett Packard Enterprise Development LP. The information contained herein is subject to change without notice. The only warranties for Hewlett Packard Enterprise products and services are set forth in the express warranty statements accompanying such products and services. Nothing herein should be construed as constituting an additional warranty. Hewlett Packard Enterprise shall not be liable for technical or editorial errors or omissions contained herein.

a50004315enw - 16919 - Worldwide - V42 - 05-October-2026
HEWLETT PACKARD ENTERPRISE
HPE.com