RETIRED: This document has been officially retired, and the base products listed herein are now considered obsolete and are no longer available for sale. Consequently, the information contained within may no longer be current. This document is provided exclusively for reference and informational purposes.

Overview

HPE Apollo 6500 Gen10 Plus System

Built for the Exascale Era the HPE Apollo 6500 Gen10 Plus Systems accelerates performance with powered by NVIDIA HGX A100 Tensor Core GPUs with NVLink or AMD Instinct™ MI200 with 2nd Gen Infinity Fabric™ Link to take on the most complex HPC and AI workloads. This purpose-built platform provides enhanced performance with premier GPUs, fast GPU interconnects, high-bandwidth fabric, and configurable GPU topology, providing rock-solid reliability, availability, and serviceability (RAS). Configure with single or dual processor options for a better balance of processor cores, memory, and I/O. Improve system flexibility with support for 4, 8, 10, or 16 GPUs and a broad selection of operating systems and options all within a customized design to reduce costs, improve reliability, and provide leading serviceability.

Simplify management, reduce costs, and improve reliability and performance for HPC and AI workloads.

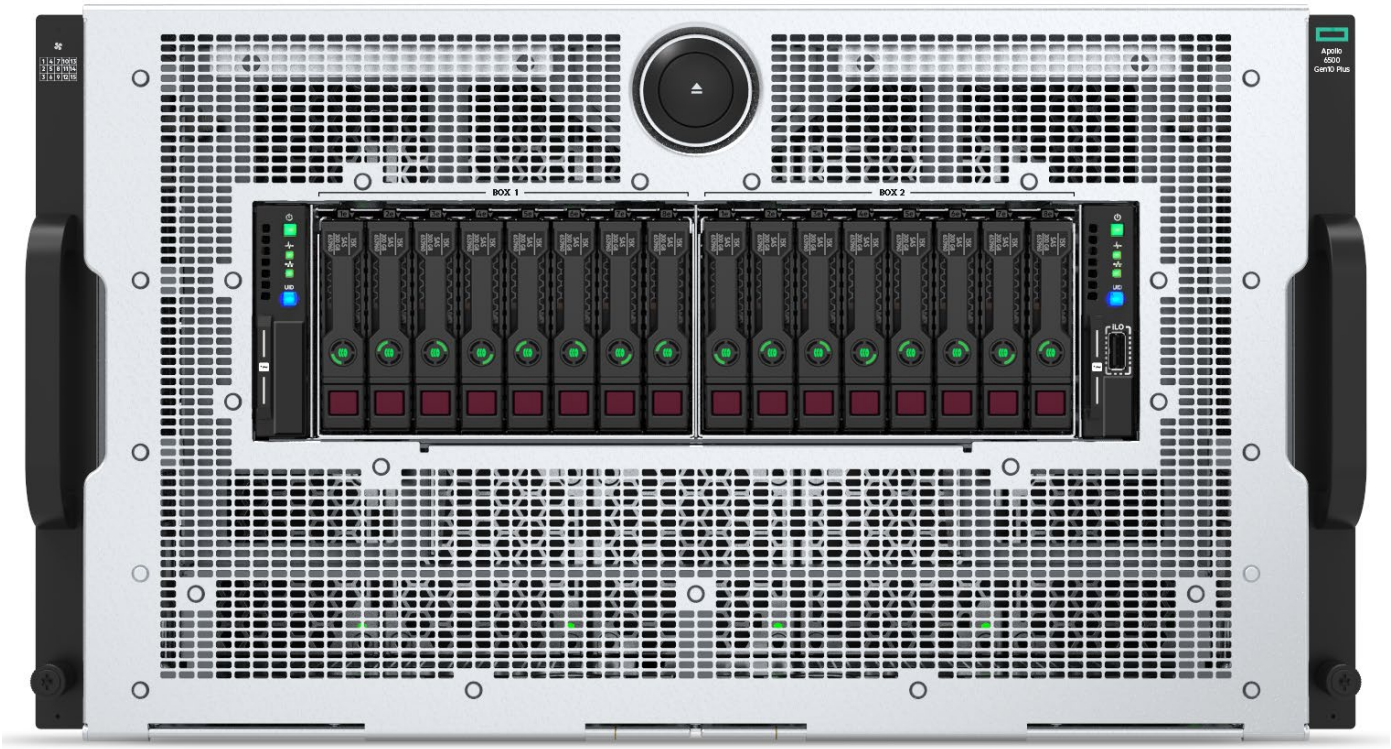

What's New

- NVIDIA H100 and AMD MI210 PCIe GPU support
- AMD Instinct™ MI00 with 2nd Gen Infinity Fabric™ Link
- Direct Liquid Cooling System fully integrated, installed, and supported by HPE. Also supporting PCIe Gen4 GPUs provides extreme compute flexibility.
- Flexible support and options: InfiniBand, Ethernet, HPE Slingshot, Ubuntu and Enterprise OS such as Windows, VMware, Suse, Red Hat, Choice and HPE Services for advisory, professional and operational services, along with flexible consumption model across the globe.
- Enterprise RAS with HPE iLO5, easy access modular design, and N+N power supplies.
- Save time and cost, gain improved user productivity with HPE iLO5
- World's most secure industry standard server using HPE iLO5

Overview

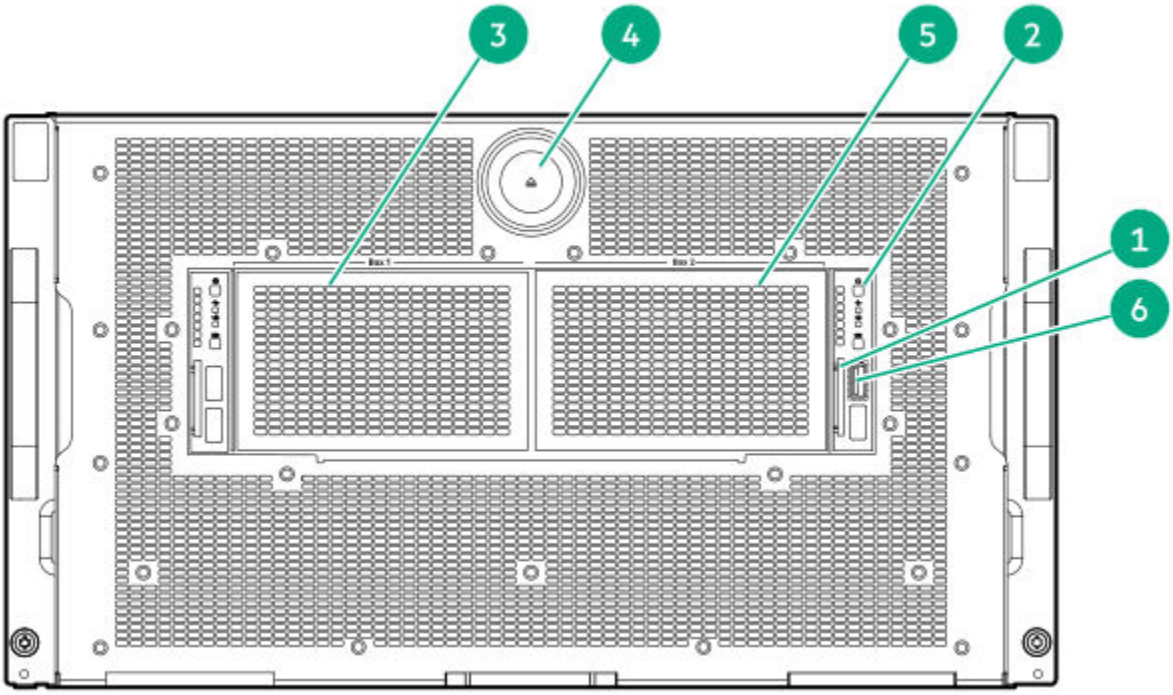

HPE ProLiant XL675d Gen10 Plus - Front Panel View

1. Serial number / iLO Information pull tab
2. Power Switch module
3. Drive Box 1
4. Chassis front door lever button
5. Drive Box 2
6. Dedicated iLO management port

Overview

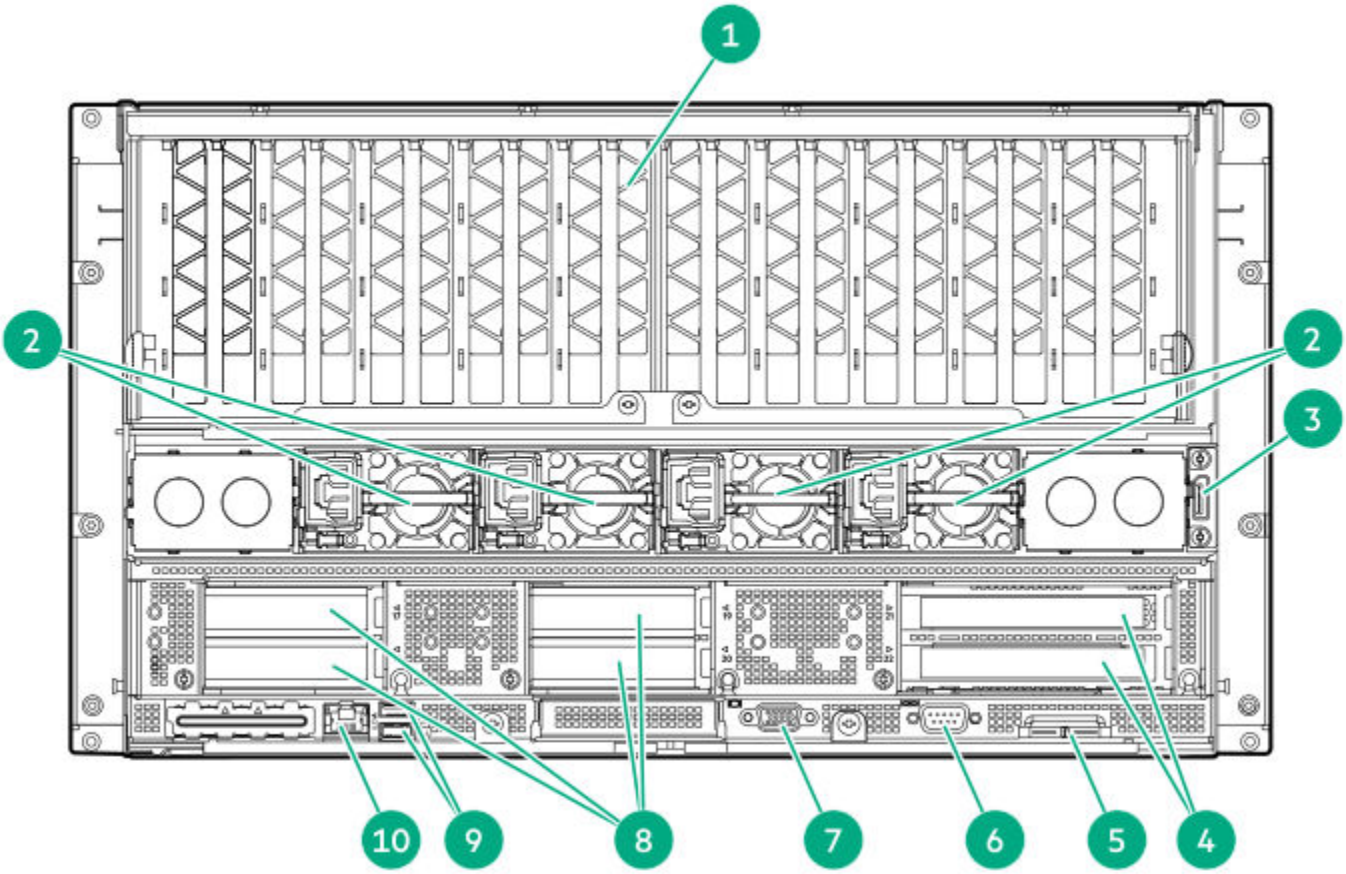

HPE ProLiant XL675d Gen10 Plus PCIe GPU Module - Rear View

1. PCIe GPU tray
2. 12 V power supplies (4)
3. APM 2.0 connector
4. PCIe4 x16 half length/full height expansion slots 21 and 22
5. Serial Number / iLO Information pull tab
6. Optional Serial Port
7. Video connector
8. PCIe4 x16 low-profile expansion slots 17 to 20
9. USB 3.1 Gen1 connectors (2)
10. Dedicated iLO management port

Overview

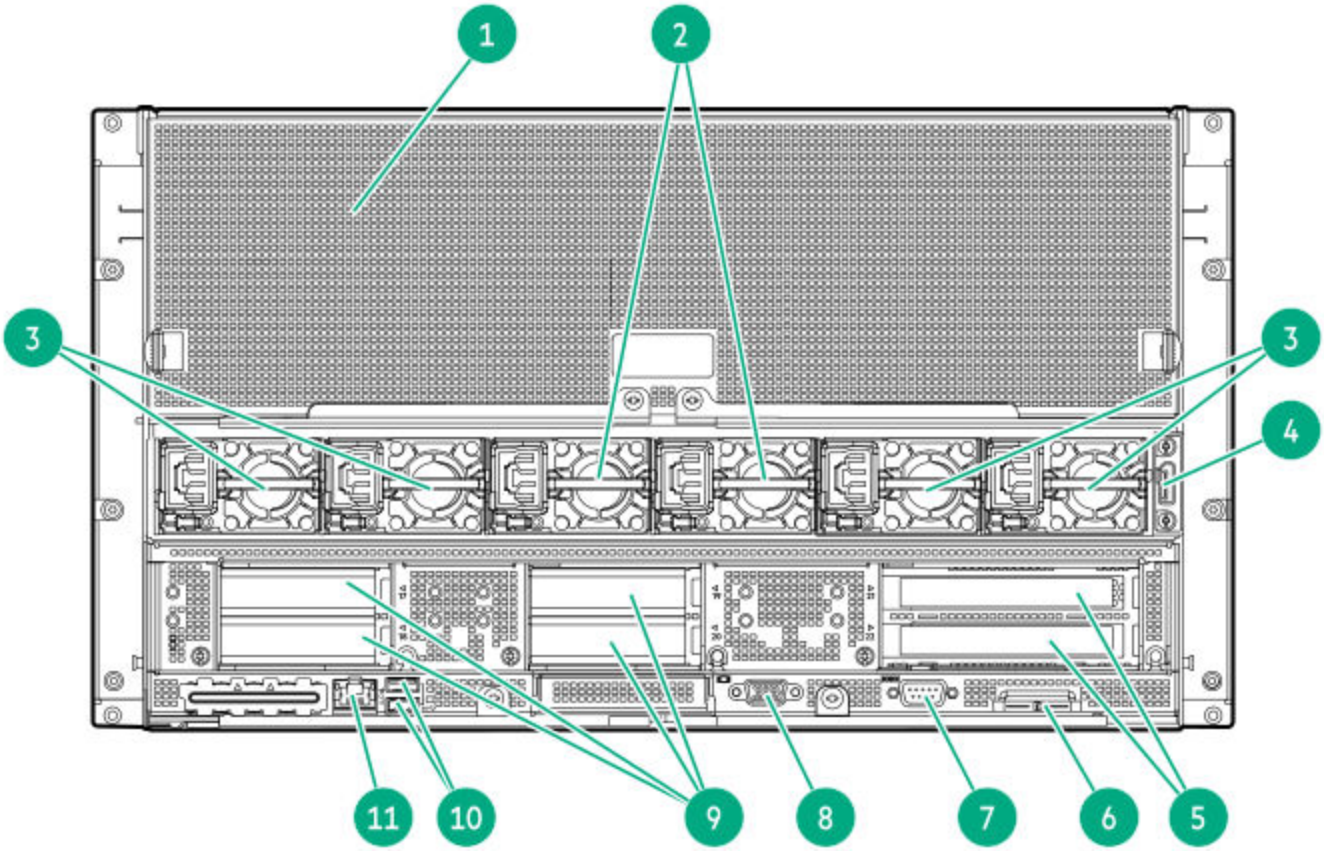

HPE ProLiant XL675d Gen10 Plus SXM4 GPU Module - Rear View

1. SXM4 GPU tray
2. 12 V power supplies (2)
3. 54 V power supplies (4)
4. APM 2.0 connector
5. PCIe4 x16 half length/full height expansion slots 21 and 22
6. Serial Number / iLO Information pull tab
7. Optional Serial Port
8. Video connector
9. PCIe4 x16 low-profile expansion slots 17 to 20
10. USB 3.1 Gen1 connectors (2)
11. Dedicated iLO management port

Overview

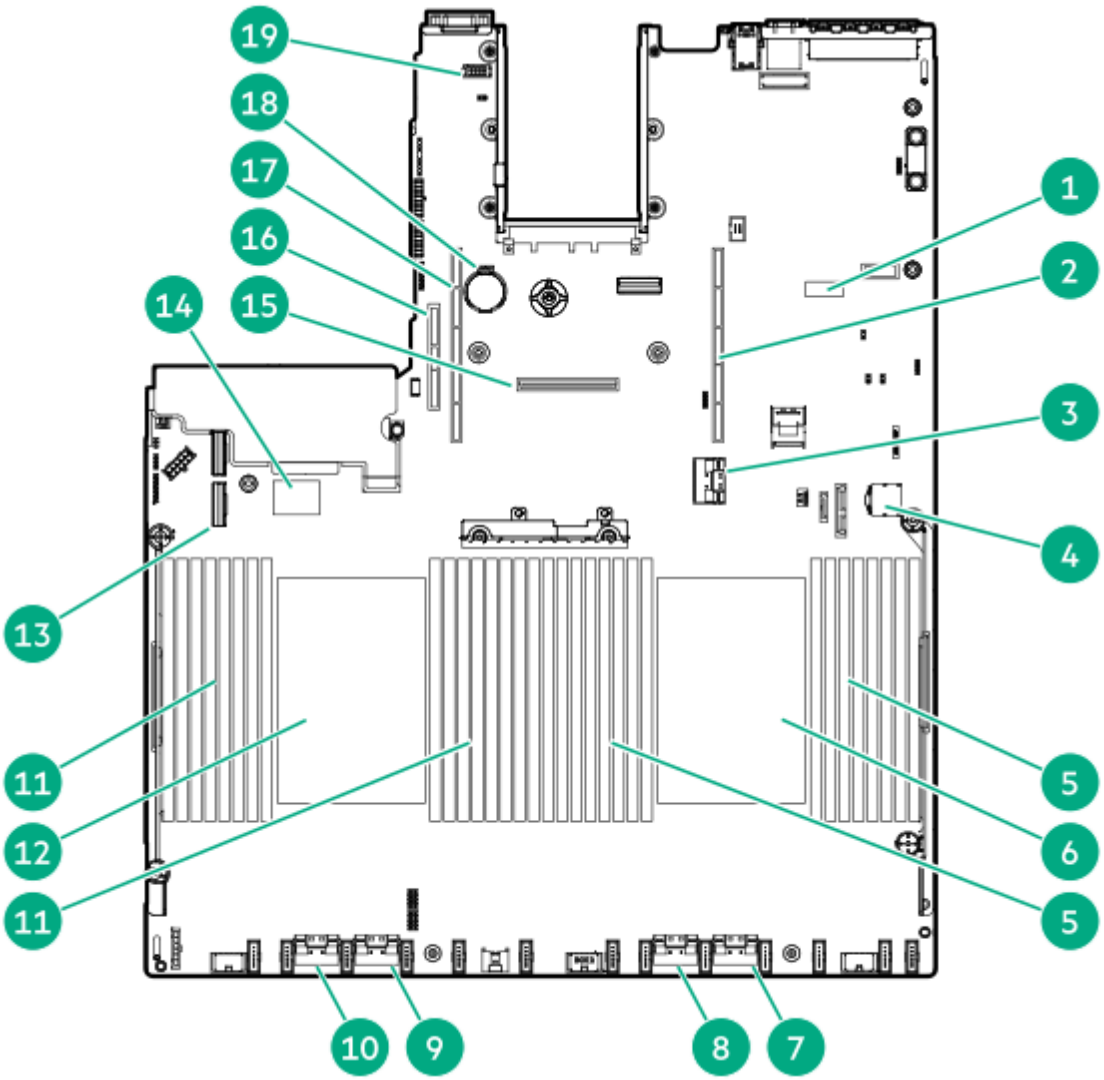

HPE ProLiant XL675d Gen10 Plus System Board Module

1. System maintenance switch
2. Primary (processor 1) x16 PCIe riser connector
3. x16 primary PCIe riser / PCIe jumper connector
4. Front power connector
5. Processor 1 DIMMs
6. Processor 1
7. x8 NVMe Slim SAS connector
8. x8 NVMe Slim SAS connector
9. x8 NVMe Slim SAS connector
10 x8 NVMe Slim SAS connector
11. Processor 2 DIMMs
12. Processor 2
13. Embedded SATA connector
14. Dual USB port
15. Type-a storage controller slot
16. Tertiary (processor 2) x16 PCIe riser connector
17. Secondary (processor 2) x16 PCIe riser connector
18. System battery
19. Rear Serial port connector

Overview

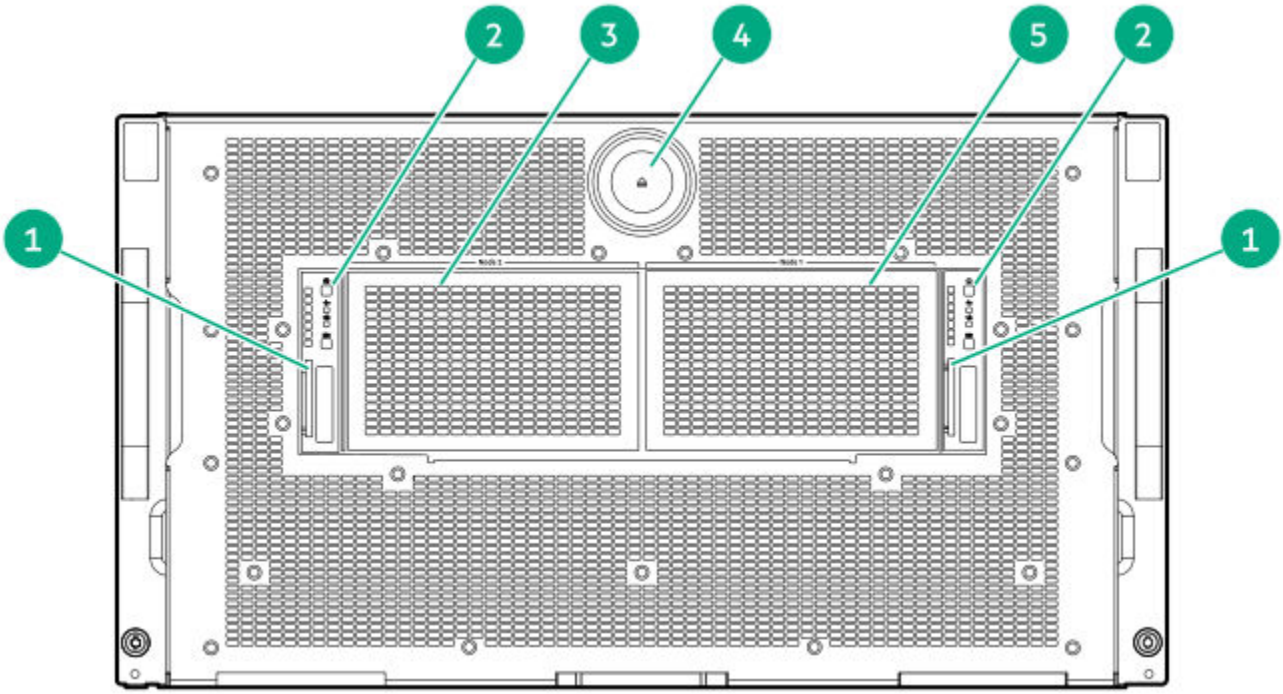

HPE ProLiant XL645d Gen10 Plus - Front Panel View

1. Serial number / iLO Information pull tab
2. Power Switch Module
3. Drive box 1 (labeled Node 2 Drive Box)
4. Chassis Front Door Lever button
5. Drive box 2 (labeled Node 1 Drive Box)

Overview

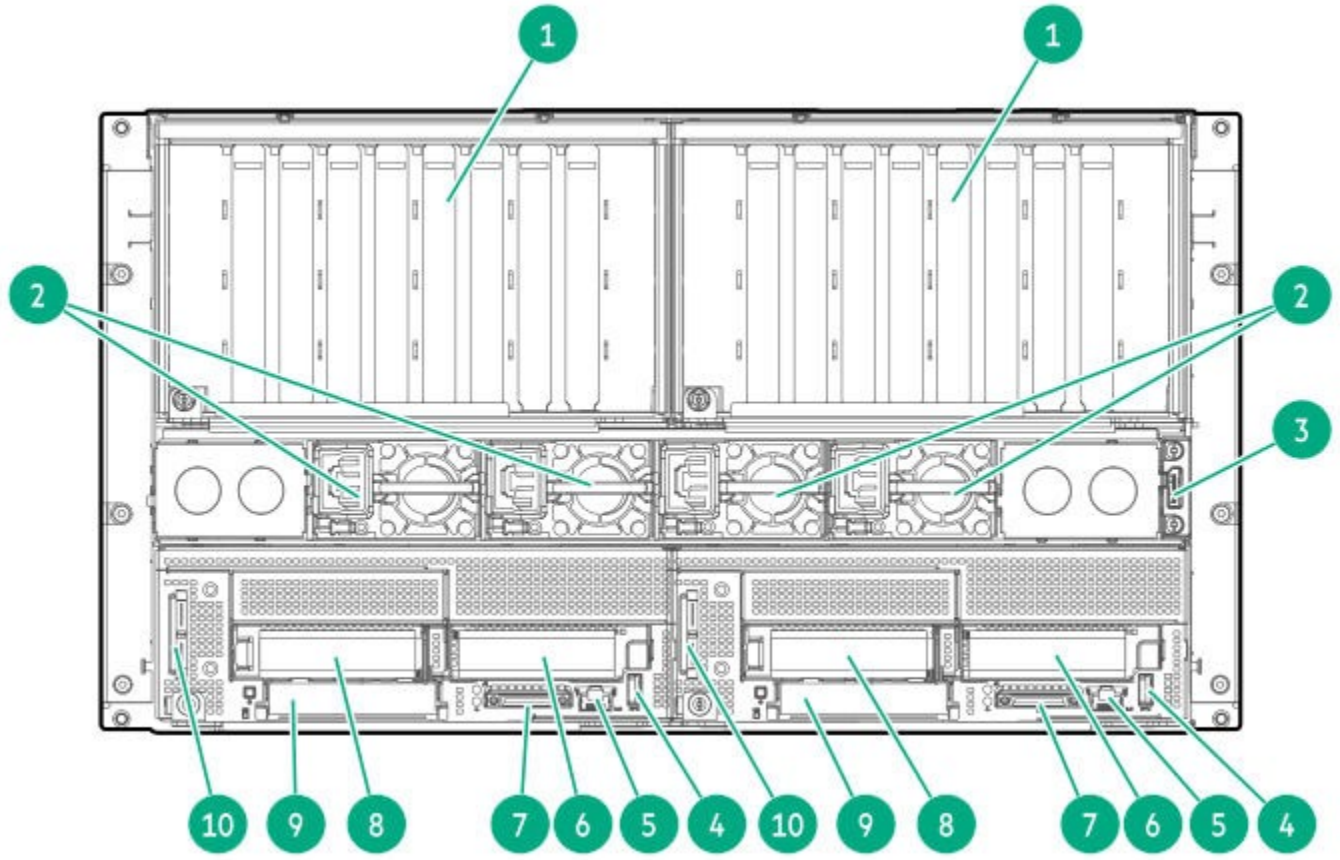

HPE ProLiant XL645d Gen10 Plus PCIe GPU Module - Rear View

1. PCIe GPU trays
2. 12 V power supplies (4)
3. iLO dedicated network port
4. USB 3.1 Gen 1 Type-A port
5. NIC / shared iLO network port
6. Slot 2 PCIe4 x16 (16, 8, 4, 2, 1)
7. SUV port
8. Slot 1 PCIe4 x16 (16, 8, 4, 2, 1)
9. OCP 3.0 NIC adapter slot blank

10 Serial number/iLO information pull tab

Overview

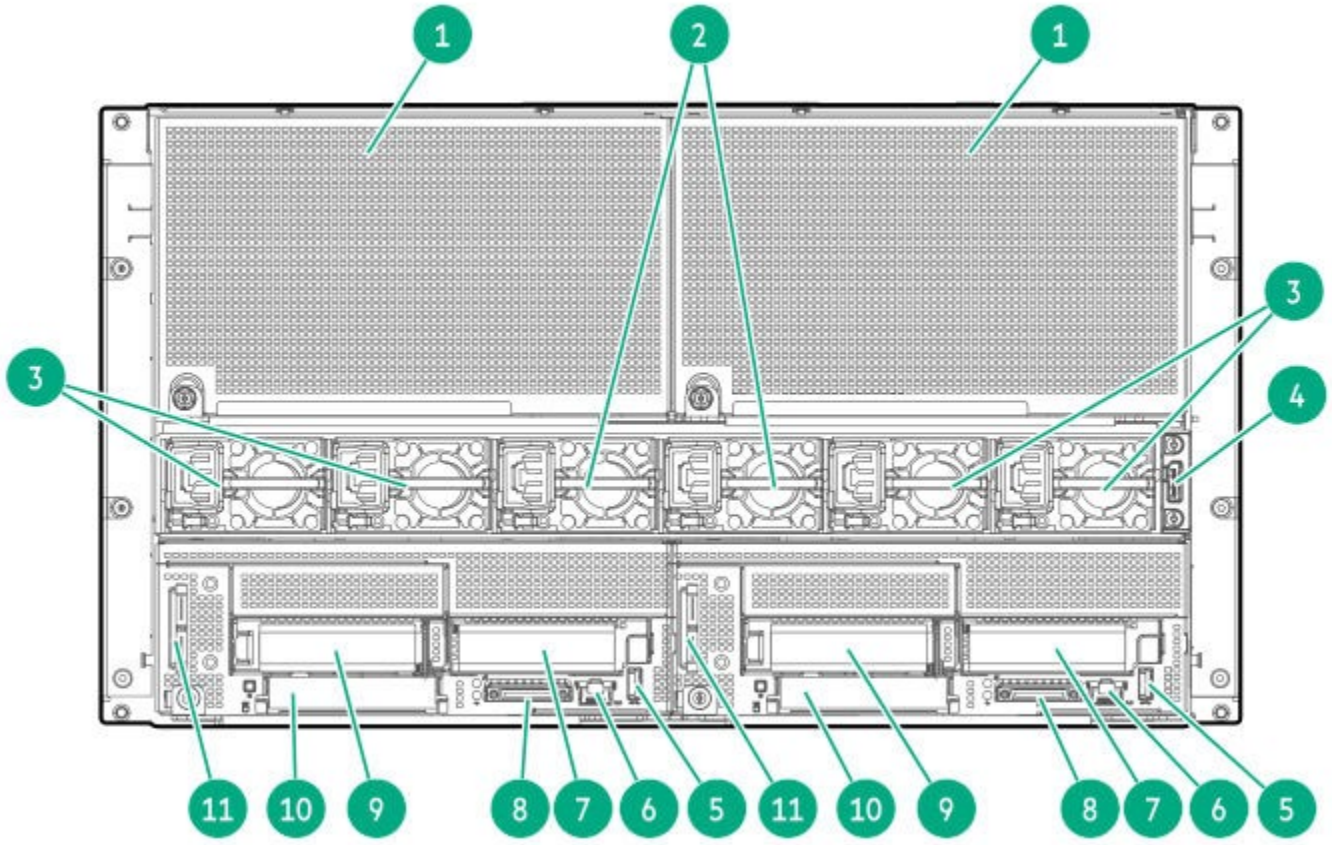

HPE ProLiant XL645d Gen10 Plus Modular SXM GPU Module - Rear View

1. SXM GPU trays
2. 12 V power supplies (2)
3. 54V power supplies (4)
4. iLO dedicated network port
5. USB 3.1 Gen 1 Type-A port
6. NIC/shared iLO network port
7. Slot 2 PCIe4 x16 (16, 8, 4, 2, 1)
8. SUV port
9. Slot 1 PCIe4 x16 (16, 8, 4, 2, 1)
10. OCP 3.0 NIC adapter slot blank
11. Serial number / iLO Information pull tab

Overview

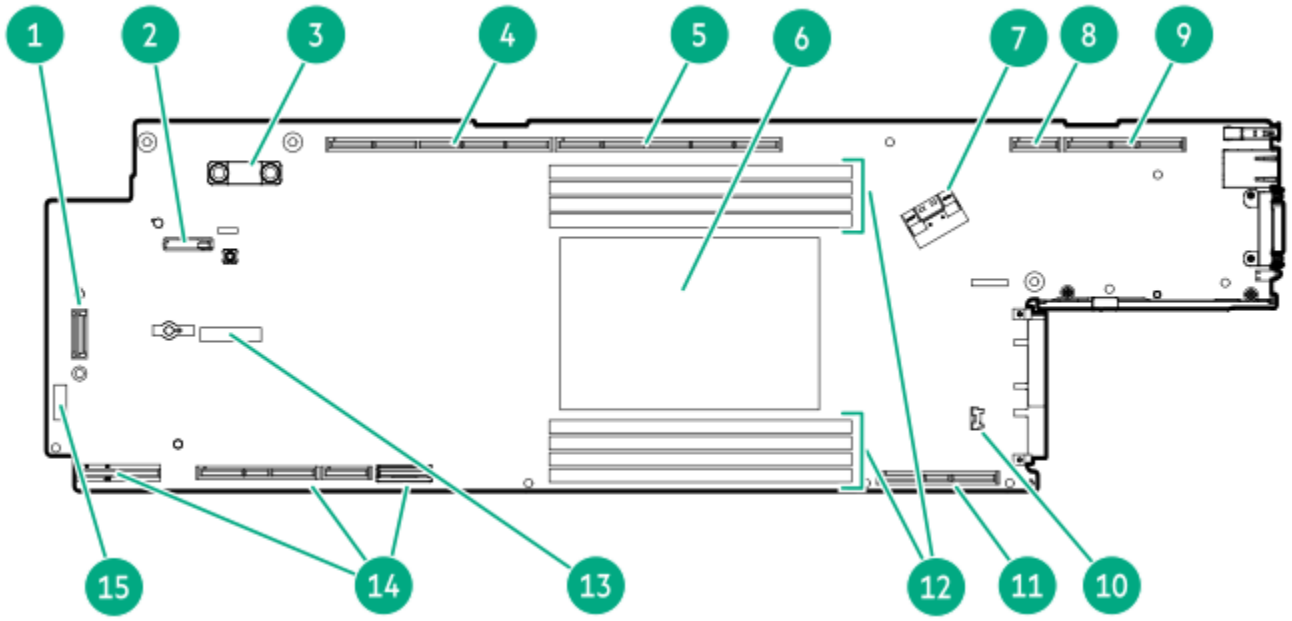

HPE ProLiant XL645d Gen10 Plus System Board Module

1. HPE NS204i-t Gen10 Plus NVMe Boot Controller connector
2. System battery
3. TPM connector
4. Secondary PCIe4 x16 riser connector 5
5. Secondary PCIe4 x16 riser connector 4
6. Processor
7. x8 Slim SAS NVMe/SATA 6GB/s port
8. Secondary PCIe4 x16 riser connector 3
9. Secondary PCIe4 x16 riser connector 2
10. System board module power button cable connector
11. Primary PCIe4 x16 riser connector 1
12. DIMM slots
13. Slim SAS connector for M.2 SSD boot controller option
14. Tertiary PCIe4 x16 riser connector 6
15. System maintenance switch

Standard Features

Platform Information		
HPE Apollo 6500 Gen10 Plus System		
	HPE ProLiant XL675d Server	**HPE ProLiant XL645d Server Node**
Chassis	HPE Apollo d6500 Gen10 Plus Configure-to-order Chassis (6U Chassis)	
Density / Scale	Dual Processor Server per chassis	Up to 2 Single Processor Server Nodes per chassis
GPU	Up to 10 Double Wide PCIe or 16 Single Wide PCIe GPU	Up to 4 Double Wide PCIe or 8 Single Wide PCIe GPU per Server Node
	Choice between: NVIDIA HGX™ A100 8-GPU, AMD Instinct™ MI100 with 2nd Gen Infinity Fabric™, and other leading accelerators	Choice between: NVIDIA HGX™ A100 4-GPU, AMD Instinct™ MI100 with 2nd Gen Infinity Fabric™, and other leading accelerators
Interconnect	Support for up to six high speed fabric interconnects; whether Ethernet, Infiniband, or HPE Cray Slingshot	Support for up to three high speed fabric interconnects; whether Ethernet, Infiniband, or HPE Cray Slingshot
Processor	Dual AMD 2nd Gen EPYC™ Series Processor per server, up to 280W	Single AMD 2nd & 3rd Gen EPYC™ Series Processor per Server Node, up to 280W
Memory	32 3200MT/s DDR4 Smart Memory	8 3200MT/s DDR4 Smart Memory per Server Node
Storage	Up to 16 SFF drives – SAS/SATA/NVMe (M.2 optional)	Up to 8 SFF drives – Max 6 NVMe per Server Node (M.2 optional)
System Management	HPE Integrated Lights Out (iLO 5), HPE Performance Cluster Manager (HPCM), HPE Container Platform, HPE OneView, Integrated Rack Consolidation Module (RCM)	
System Security	iLO 5 Silicon Root of Trust, iLO Advanced (Optional)	
OS Support	HPE Cray OS, Microsoft Windows Server, Red Hat, Ubuntu, VMware	
Power	Fully redundant power for all configurations with up to 6 3000W Platinum Hot Plug Power Supplies per chassis.	
	Power Capping available at the server and chassis level; Rack and Row level Power Capping available with Apollo Platform Manager Kit. Shared power infrastructure at the chassis level.	
Cooling	15 - 80mm dual rotor hot pluggable chassis fans	
	Direct Liquid Cooling System fully integrated, installed, and supported by HPE	
Storage Controller	Embedded SATA; optional HPE E208i-a SR, P408i-a SR, and P816i-a SR series Smart Arrays	Embedded SATA; optional HPE E208e-p SR and P408e-p SR series Smart Arrays
Warranty	3 years parts / 3 years labor / 3 years onsite support	

Standard Features

Processors

Up to 2 of the following depending on model. All processors listed are compatible on both supported servers, except where denoted.

Notes:

- For more information regarding AMD 2nd Gen EPYC™ Series Processors, visit: **https://www.amd.com/en/products/epyc-server.**
- All AMD 2nd & 3rd Gen EPYC™ Series Processor can support up to 2TB of memory each on the Apollo 6500 Gen10 Plus system, depending on the chosen DIMMs.
- 7xxxP SKU's are designed for single socket systems and only supported on the XL645d**
- Certain limitations may apply to select processors, please contact your HPE sales representatives for any questions on processor support needed.

AMD EPYC™ Series Processors							
AMD EPYC™ Processor	**Cores**	**Base Frequency**	**Max Frequency**	**Max Memory**	**Wattage (W)**	**Cache**	**Memory**
EPYC 7H12	64	2.9 GHz	3.3 GHz	2TB	280	256MB	3200MT/s
EPYC 7F72	24	3.2 GHz	3.7 GHz	2TB	240	192MB	3200MT/s
EPYC 7F52	16	3.5 GHz	3.9 GHz	2TB	240	256MB	3200MT/s
EPYC 7F32	8	3.7 GHz	3.9 GHz	2TB	180	128MB	3200MT/s
EPYC 7742	64	2.25 GHz	3.4 GHz	2TB	225	256MB	3200MT/s
EPYC 7702P **	64	2.0 GHz	3.35 GHz	2TB	200	256MB	3200MT/s
EPYC 7702	64	2.0 GHz	3.35 GHz	2TB	200	256MB	3200MT/s
EPYC 7313P **	16	3.0GHz	3.7GHz	2TB	155	128MB	3200MT/s
EPYC 7662	64	2.0 GHz	3.3 GHz	2TB	225	256MB	3200MT/s
EPYC 7642	48	2.3 GHz	3.3 GHz	2TB	225	256MB	3200MT/s
EPYC 7552	48	2.2 GHz	3.3 GHz	2TB	200	192MB	3200MT/s
EPYC 7542	32	2.9 GHz	3.4 GHz	2TB	225	128MB	3200MT/s
EPYC 7532	32	2.4 GHz	3.3 GHz	2TB	200	256MB	3200MT/s
EPYC 7502P **	32	2.5 GHz	3.35 GHz	2TB	180	128MB	3200MT/s
EPYC 7502	32	2.5 GHz	3.35 GHz	2TB	180	128MB	3200MT/s
EPYC 7452	32	2.35 GHz	3.35 GHz	2TB	155	128MB	3200MT/s
AMD EPYC™ Series Processors							
AMD EPYC™ Processor	**Cores**	**Base Frequency**	**Max Frequency**	**Max Memory**	**Wattage (W)**	**Cache**	**Memory**
EPYC 7443P **	24	2.85GHz	4GHz	2TB	200	128MB	3200MT/s
EPYC 7402P **	24	2.8 GHz	3.35 GHz	2TB	180	128MB	3200MT/s
EPYC 7402	24	2.8 GHz	3.35 GHz	2TB	180	128MB	3200MT/s
EPYC 7352	24	2.3 GHz	3.2 GHz	2TB	155	128MB	3200MT/s
EPYC 7302P **	16	3.0 GHz	3.3 GHz	2TB	155	128MB	3200MT/s
EPYC 7302	16	3.0 GHz	3.3 GHz	2TB	155	128MB	3200MT/s
EPYC 7262	8	3.2 GHz	3.4 GHz	2TB	155	128MB	3200MT/s
EPYC 7763	64	2.45 GHz	3.5 GHz	2TB	280	256MB	3200MT/s
EPYC 7713	64	2.0 GHz	3.675 GHz	2TB	225	256MB	3200MT/s
EPYC 7713P **	64	2.0GHz	3.675GHz	2TB	225	256MB	3200MT/s
EPYC 7663	56	2.0 GHz	3.5 GHz	2TB	240	256MB	3200MT/s
EPYC 7643	48	2.3 GHz	3.6 GHz	2TB	225	256MB	3200MT/s

Standard Features

AMD EPYC™ Processor	Cores	Base Frequency	Max Frequency	Max Memory	Wattage (W)	Cache	Memory
EPYC 7543	32	2.8 GHz	3.7 GHz	2TB	225	256MB	3200MT/s
EPYC 7513	32	2.6 GHz	3.7 GHz	2TB	200	128MB	3200MT/s
EPYC 7453	28	2.75 GHz	3.45 GHz	2TB	225	64MB	3200MT/s
EPYC 7543P **	32	2.8GHz		2TB	225	256MB	3200MT/s
EPYC 7443	24	2.85 GHz	4.0 GHz	2TB	200	128MB	3200MT/s
EPYC 7413	24	2.65 GHz	3.6 GHz	2TB	180	128MB	3200MT/s
EPYC 7343	16	3.2 GHz	3.9 GHz	2TB	190	128MB	3200MT/s
EPYC 7313	16	3.0 GHz	3.7 GHz	2TB	155	128MB	3200MT/s
EPYC 75F3	32	2.95 GHz	4.0 GHz	2TB	280	256MB	3200MT/s
EPYC 74F3	24	3.2 GHz	4.0 GHz	2TB	240	256MB	3200MT/s
EPYC 73F3	16	3.5 GHz	4.0 GHz	2TB	240	256MB	3200MT/s
EPYC 7773X	64	2.2GHz	3.5 GHz	2TB	280	768MB	3200MT/s
EPYC 7573X	32	2.8GHz	3.6GHz	2TB	280	768MB	3200MT/s
EPYC 7473X	24	2.8GHz	3.7GHz	2TB	240	768MB	3200MT/s
EPYC 7373X	16	3.1GHz	3.8GHz	2TB	240	768MB	3200MT/s

Chipset

No Chipset – System on Chip (SoC) design

On System Management Chipset

HPE iLO 5 GXP ASIC - 32MB Flash shares 512K NVRAM with BIOS

Notes:

- ** 7XXXP AMD Processors are only compatible with the XL645d Server Node
- Read and learn more in the **iLO QuickSpecs**.

Memory		
HPE ProLiant XL675d		
Type	HPE DDR4 Smart Memory, Registered (RDIMM), Load Reduced (LRDIMM)	
DIMM Slots Available	32	16 DIMM slots per processor, 8 channels per processor, 2 DIMMs per channel
Maximum capacity (LRDIMM)	4.0 TB	Up to 32 128 GB LRDIMM @ 3200 MT/s
Maximum capacity (RDIMM)	2.0 TB	Up to 32 64 GB RDIMM @ 3200 MT/s
Notes: When 2 DIMMs are populated per channel, memory speed drops to 2933 MT/S		
HPE ProLiant XL645d		
Type	HPE DDR4 Smart Memory, Registered (RDIMM), Load Reduced (LRDIMM)	
DIMM Slots Available per Server	8	8 DIMM slots per processor, 8 channels per processor, 1 DIMM per channel
Maximum capacity (LRDIMM)	1.0 TB	Up to 8 128 GB LRDIMM @ 3200 MT/s
Maximum capacity (RDIMM)	512 GB	Up to 8 64 GB RDIMM @ 3200 MT/s

Notes:

- Mixing of RDIMM and LRDIMM memory is not supported.
- Some memory kits may be subject to delayed availability.
- Memory DIMM availability with a server platform is dependent upon completion of certification testing.
- The maximum memory speed is a function of the memory type, memory configuration, and processor model.

Standard Features

Memory Protection

For details on the HPE Server Memory Options RAS feature, visit: **http://www.hpe.com/docs/memory-ras-feature**.

Expansion Slots – HPE Proliant XL675d

Notes: Modular configurations are factory integrated options. See below for PCIe configurations.

PCIe Fabric Riser - Primary, Secondary, or Tertiary Riser					
Slot #	**Technology**	**Bus Width**	**Connector Width**	**Slot Form Factor**	**Supported CPU**
17	PCIe 4.0	x16	x16	Half-height, half-length slot	Processor 1
18	PCIe 4.0	x16	x16	Half-height, half-length slot	Processor 1
19	PCIe 4.0	x16	x16	Half-height, half-length slot	Processor 1 or 2 ***
20	PCIe 4.0	x16	x16	Half-height, half-length slot	Processor 1 or 2 ***
21	PCIe 4.0	x16	x16	Full-height, Full-length slot	Processor 1 or 2 ***
22	PCIe 4.0	x16	x16	Full-height, Full-length slot	Processor 1 or 2 ***

Notes:

- All Smart Array controllers should be installed in slot 21/22 before any of the slots 17-20. All systems will have a NIC installed in slot 21 or slot 22 as the default configuration.
- *** Configurable in RBSU

PCIe GPU Riser					
Slot #	**Instinct™ MI100 GPU with 4x4 bridge**	**HGX™ A100 GPU with 2x2 bridge**	**PCIe Double Wide**	**PCIe Single Wide**	**Supported CPU**
1	P*	P**	P	P	Processor 1
2	P	P	P	P	Processor 1
3	P	P	P	P	Processor 1
4				P	Processor 1
5	P	P	P	P	Processor 1
6				P	Processor 1
7	P	P	P	P	Processor 1
8				P	Processor 1
9	P	P	P	P	Processor 1 or 2 ***
10				P	Processor 1 or 2 ***
11	P	P	P	P	Processor 1 or 2 ***
12				P	Processor 1 or 2 ***
13	P	P	P	P	Processor 1 or 2 ***
14				P	Processor 1 or 2 ***
15	P	P	P	P	Processor 1 or 2 ***
16	P*	P**	P	P	Processor 1 or 2 ***

Notes:

- Single Wide and Double Wide GPUs are not able to be installed together. Different GPU types cannot be mixed.
- Instinct™ MI100 with Infinity Flex 4x4 Bridge for HPE will follow the placement configuration: First set of four Bridged GPUs: GPU2, GPU3, GPU5, GPU7; Second set of four Bridged GPUs: GPU9, GPU11, GPU13, GPU15.
- ** The optimal configuration for the NVLINK bridges is 8 GPUs instead of 10, with the bridges installed in the following slot pairs: 2-3, 5-7, 9-11, and 13-15.
- *** Configurable in RBSU
- Unbridged GPUs can still be installed in PCIe1 and PCIe16 when we have linked GPUs in the other slots.

Standard Features

HPE ProLiant XL675d System Block Diagrams - PCIe GPU Configuration

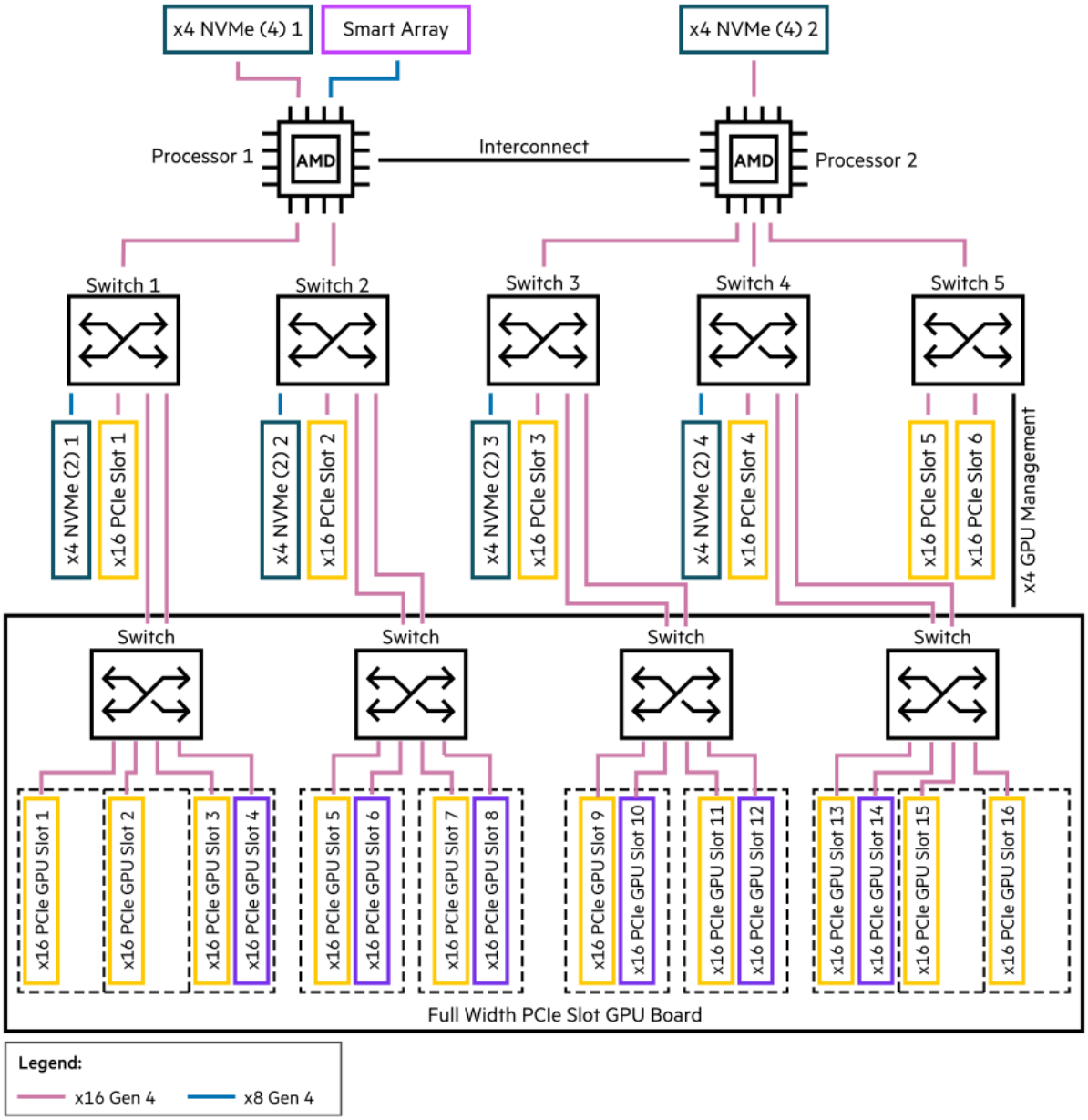

Standard Features

HPE ProLiant XL675d System Block Diagrams – Modular SXM GPU Configuration

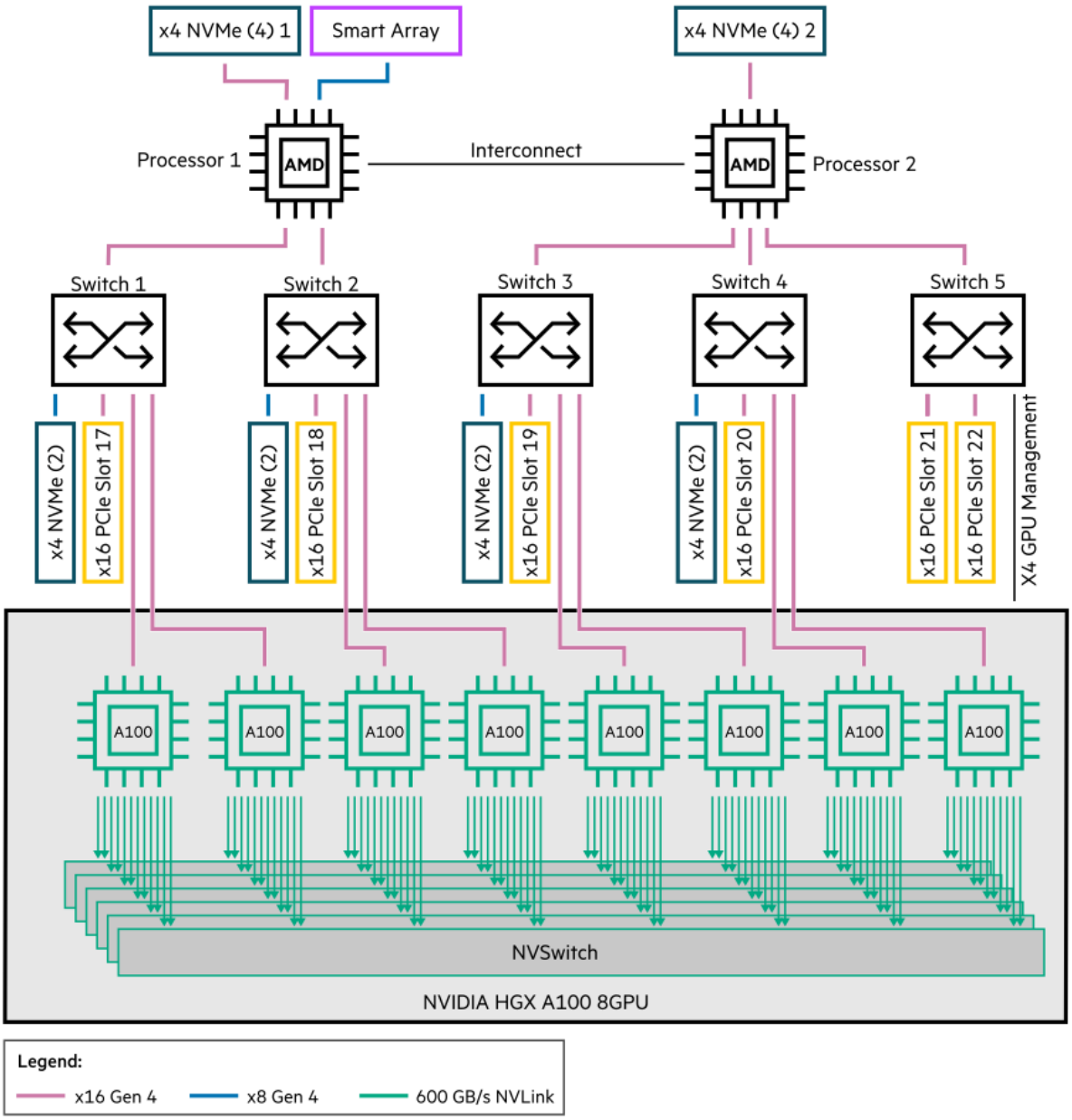

Notes: For the highest reliability and best customer experience, HPE must install the NVLink GPU in the factory. Field installations and upgrades of NVLink GPU are no longer supported.

Standard Features

HPE ProLiant XL645d System Block Diagrams - PCIe GPU Configuration

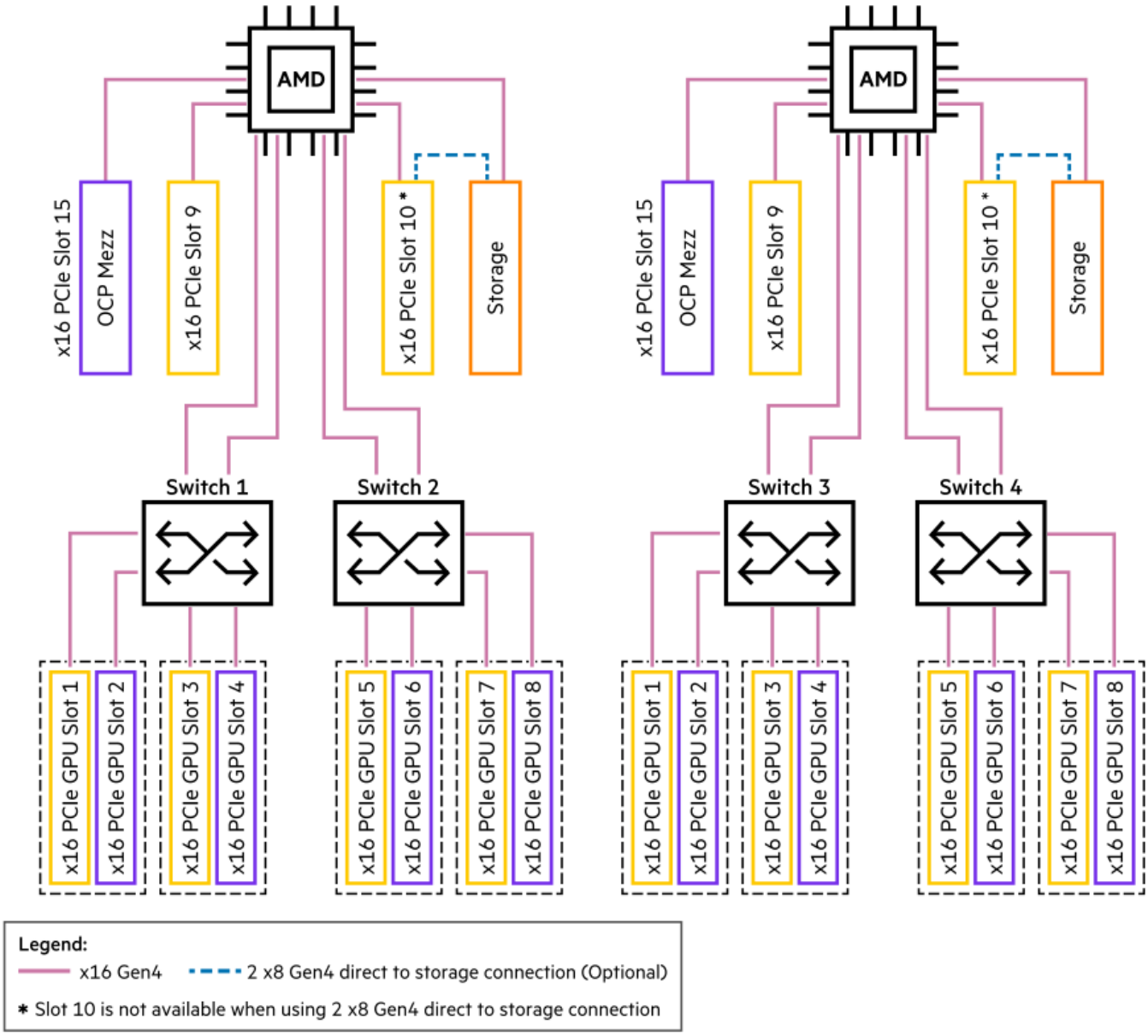

Standard Features

HPE ProLiant XL645d System Block Diagrams – Modular SXM GPU Configuration

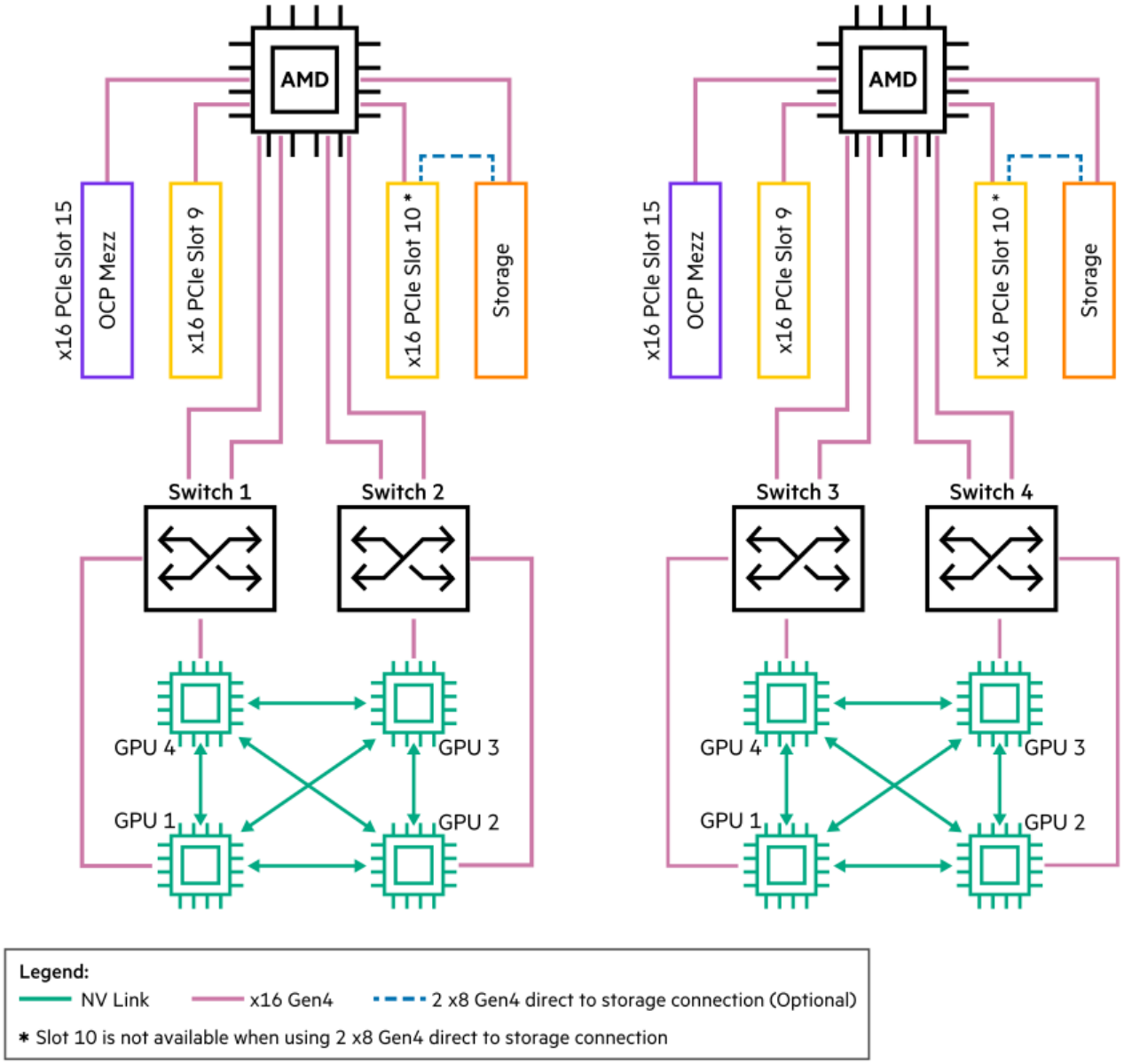

Embedded SATA

Embedded AHCI controller for SATA

Notes:

- For Linux users, HPE offers a solution that uses in-distro open-source software to create a two-disk RAID 1 boot volume. For more information visit: **https://downloads.linux.hpe.com/SDR/project/lsrrb/**
- AHCI mode is default settings

Standard Features

Storage Controllers

The Gen10/Gen10 Plus controller naming framework has been updated to simplify identification as depicted below. For a more detailed breakout of the available Gen10/Gen10 Plus Smart Array controllers visit the **HPE Server Storage** website.

Performance RAID Controller	Available for	
A performance array is recommended for the Apollo 6500 Gen10	**XL675d**	**XL645d**
HPE Smart Array P408i-a SR Gen10 (8 Internal Lanes/2GB Cache) 12G SAS Modular Controller	✓	
HPE Smart Array P408e-p SR Gen10 (8 External Lanes/4GB Cache) 12G SAS PCIe Plug-in Controller	✓	✓
HPE Smart Array P408i-p SR Gen10 (8 Internal Lanes/2GB Cache) 12G SAS PCIe Plug-in Controller		✓
HPE Smart Array P816i-a SR Gen10 (16 Internal Lanes/4GB Cache/SmartCache) 12G SAS Modular Controller	✓	
Notes: Performance RAID Controllers require the HPE Smart Storage Battery (782961-B21) which is sold separately.		
Essential RAID Controller		
HPE Smart Array E208i-a SR Gen10 (8 Internal Lanes/No Cache) 12G SAS Modular Controller	✓	
HPE Smart Array E208e-p SR Gen10 (8 External Lanes/No Cache) 12G SAS PCIe Plug-in Controller	✓	✓
HPE Smart Array E208i-p SR Gen10 (8 Internal Lanes/No Cache) 12G SAS PCIe Plug-in Controller		✓

HPE NS204i-t x2 Lanes NVMe PCIe3 x8 OS Boot Controller – XL645d

HPE NS204i-p x2 Lanes NVMe PCIe3 x8 OS Boot Device – XL675d

The HPE NS204i-p OS Boot Device is an economical PCIe add-in card that enables dedicated RAID1 operating system mirroring on the two included 480GB M.2 NVMe SSDs. It presents itself to the system as a single directly-connected NVMe drive (not a RAID controller) and it is "plug-and-play," with no need for device configuration or management.

HPE Storage Options	Available for	
Emulex Fibre Channel HBAs	**XL675d**	**XL645d**
HPE StoreFabric SN1200E 16Gb Single Port Fibre Channel Host Bus Adapter	✓	✓
HPE StoreFabric SN1200E 16Gb Dual Port Fibre Channel Host Bus Adapter	✓	✓
HPE StoreFabric SN1600E 32Gb Single Port Fibre Channel Host Bus Adapter	✓	
HPE StoreFabric SN1600E 32Gb Dual Port Fibre Channel Host Bus Adapter	✓	
HPE StoreFabric SN1610E 32Gb Single Port Fibre Channel Host Bus Adapter	✓	✓
HPE StoreFabric SN1610E 32Gb Dual Port Fibre Channel Host Bus Adapter	✓	✓
QLogic Fibre Channel HBAs		
HPE StoreFabric SN1100Q 16Gb Single Port Fibre Channel Host Bus Adapter	✓	✓
HPE StoreFabric SN1100Q 16Gb Dual Port Fibre Channel Host Bus Adapter	✓	✓
HPE StoreFabric SN1610Q 32Gb 1-port Fibre Channel Host Bus Adapter	✓	✓
HPE StoreFabric SN1610Q 32Gb 2-port Fibre Channel Host Bus Adapter	✓	✓

Notes: For the complete listing of Fibre Channel Converged Network Adapters please see: **here**

Standard Features

HPE ProLiant XL675d Storage Controller Cable Kits				
HPE Storage Configuration	**Main Cable Kit**	**Addt. Cable Kit**	**Main Backplane**	**Addt. Backplane**
8 Embedded SR100i SATA	P31480-B21		P25877-B21	
+ Up to 8 NVMe - Switch Direct Attached	P31480-B21	P31491-B21	P25877-B21	P25879-B21
8 SAS/SATA (AROC)	P27764-B21		P25877-B21	
8 SAS/SATA (AROC) + Up to 8 NVMe - Switch Direct Attached	P27764-B21	P31491-B21	P25877-B21	P25879-B21
16 SAS/SATA (AROC)	P31490-B21		P25877-B21	P25877-B21
Up to 8 NVMe – Switch Direct Attached	P31491-B21		P25879-B21	
2 Embedded SATA + 6 NVMe - Switch Direct Attached	P39951-B21		P25879-B21	
2 SAS/SATA (AROC) + 6 NVMe - Switch Direct Attached	P39952-B21		P25879-B21	
2 Embedded SATA				
+ 6 NVMe - CPU Direct Attached	P27283-B21		P25879-B21	
2 Embedded SATA				

HPE Apollo 6500 Gen10 Plus XL675d Cable Kits:

- HPE XL675d Gen10 Plus 8SFF CPU Connected x4 NMVe Cable Kit (P27279-B21)
- HPE XL675d Gen10 Plus 8SFF CPU Connected x4 NMVe and 8SFF Switch Connected x4 NVMe Cable Kit (P27280-B21)
- HPE XL675d Gen10 Plus 2SFF Smart Array SAS and 6SFF CPU Connected x4 NVMe Cable Kit (P27281-B21)
- HPE XL675d Gen10 Plus 2SFF Embedded SATA and 6SFF CPU Connected x4 NVMe Cable Kit (P27283-B21)
- HPE XL675d Gen10 Plus 8SFF Smart Array SAS Cable Kit (P27764-B21)
- HPE XL675d Gen10 Plus 8SFF Smart Array SR100i SATA Cable Kit (P31480-B21)
- HPE XL675d Gen10 Plus 16SFF Smart Array SAS Cable Kit (P31490-B21)
- HPE XL675d Gen10 Plus 6SFF Switch Connected x4 NVMe Cable Kit (P31491-B21)
- HPE XL675d Gen10 Plus 2SFF Embedded SATA and 6SFF Switch Connected x4 NVMe Cable Kit (P39951-B21)
- HPE XL675d Gen10 Plus 2SFF Smart Array SAS and 6SFF Switch Connected x4 NVMe Cable Kit (P39952-B21)

HPE ProLiant XL645d Storage Controller Cable Kits					
HPE Storage Configuration (Per Node)	**Cable Kit**	**Enablement Card**	**Backplane**	**Cable Kit**	**Enablement Card**
8 Embedded SATA	P31487-B21		P25877-B21		
8 SAS/SATA (Smart Array)	P31488-B21	HPE Smart Array	P25877-B21		
2 Embedded SATA + 2 x4 NVMe	P31483-B21		P25879-B21		
2 Embedded SATA + 6 x4 NVMe	P31482-B21		P25879-B21		
2 SAS/SATA (Smart Array) + 2 x4 NVMe	P31486-B21	HPE Smart Array	P25879-B21		
No SFF Drives + NS204i-t M.2 Boot Device				P31481-B21	P20292-B21
8 Embedded SATA + NS204i-t M.2 Boot Device	P31487-B21		P25877-B21	P31481-B21	P20292-B21
8 SAS/SATA (Smart Array) + NS204i-t M.2 Boot Device	P31488-B21	HPE Smart Array	P25877-B21	P31481-B21	P20292-B21

Standard Features

2 SAS/SATA (Smart Array) + 4 x4 NVME	P31484-B21	HPE Smart Array	P25879-B21		
8 x4 NVMe Gen4	P25883-B21		P25879-B21		
6 x4 NVMe + NS204i-t M.2 Boot Device			P25879-B21	P48120-B21	P20292-B21
8 SAS/SATA (Smart Array) + 6 x4 NVMe + NS204i-t M.2 Boot Device	P31488-B21	HPE Smart Array	P25879-B21	P48120-B21	P20292-B21
2 x4 NVMe + NS204i-t M.2 Boot Device			P25879-B21	P59752-B21	P20292-B21

HPE Apollo 6500 Gen10 Plus XL645d Cable Kits:

- HPE XL645d Gen10 Plus 2SFF Smart Array SR100i SATA and 2SFF CPU Connected x4 NVMe Cable Kit (P31483-B21)
- HPE XL645d Gen10 Plus 2SFF Smart Array SAS and 2SFF CPU Connected x4 NVMe Cable Kit (P31486-B21)
- HPE XL645d Gen10 Plus 8SFF Embedded SATA Controller Cable Kit (P31487-B21)
- HPE XL645d Gen10 Plus 8SFF Smart Array SAS Cable Kit (P31488-B21)
- HPE XL645d Gen10 Plus M.2 Cable Kit (P31481-B21)
- HPE XL645d Gen 10 Plus 8SFF Embedded SATA Controller x4 NVMe Cable Kit (P25883-B21)
- HPE XL645d Gen 10 Plus 2SFF Smart Array SAS/SATA and 4SFF CPU Connected x4 NVMe Cable Kit (P31484-B21)
- HPE XL645d Gen 10 Plus 2SFF Smart Array SATA and 6 Switch Connected x4 NVMe Cable Kit (P31482-B21)
- HPE Apollo 6500 Gen10 Plus M.2 2 x 4NVMe Cable Kit (P59752-B21)

Internal Storage Devices

One of the following depending on model

Hard Drives

- None ship standard:
  - Up to 16 SFF or 6 NVMe in the XL675d
  - Up to 8 SFF or 6 NVMe in the XL645d

Graphics

- Integrated Video Standard
- Video modes up to 1920 x 1200 @ 60Hz (32 bpp)
- 16MB Video Memory

HPE iLO 5 on system management memory

- 32 MB Flash
- 4 Gbit DDR 3 with ECC protection

Maximum Internal Storage

Configuration with Capacity

Drives	XL675d	XL645d
Hot Plug SFF SATA HDD	16 x 2 TB = 32 TB	8 x 2 TB = 16 TB
Hot Plug SFF SAS HDD	16 x 2 TB = 32 TB	8 x 2 TB = 16 TB
Hot Plug SFF NVMe PCIe SSD	16 x 15.36 TB = 245.76 TB	16 x 15.36 TB = 245.76 TB
Hot Plug SFF SATA SSD	16 x 7.68 TB = 122.88 TB	8 x 7.68 TB = 61.44 TB
Hot Plug SFF SAS SSD	16 x 15.3 TB = 244.8 TB	8 x 15.3 TB = 122.4 TB

Standard Features

Power Supply Kits

HPE Apollo 6500 Gen10 Plus Modular Accelerator Platinum Hot Plug N Power Supply Kit

- Contains (1) HPE 3000W 12v 200-277VAC Platinum Hot Plug Power Supply & (2) HPE 3000W 54V Output 200-277VAC Platinum Hot Plug Power Supply
- Single kit supports N+0 Power Redundancy. Two kits support N+N Power Redundancy for Modular GPU such as HGX™ A100

HPE Apollo 6500 Gen10 Plus PCIe Accelerator Platinum Hot Plug N Power Supply Kit

- Contains (2) HPE 3000W 12v 200-277VAC Platinum Hot Plug Power Supply
- Single kit supports N+0 Power Redundancy. Two kits support N+N Power Redundancy for all supported PCIe GPUs

Notes:

– 80 Plus Platinum efficiency.

– One power cord required per power supply.

Interfaces	
VGA	1
HPE iLO Remote Management Network Port	1 Gb Dedicated
USB 3.0	1 rear panel stacked dual port, 2 internal vertical 3.0

Operating Systems and Virtualization Software Support for ProLiant Servers

- Windows Server 2012 (Most Recent Version)
- Windows Server 2019 (Most Recent Version)
- VMware ESXi 7.0 U1
- SUSE Linux Enterprise Server (SLES) 12 SP5 (64 bit)
- SUSE Linux Enterprise Server (SLES) 15 SP1 (64 bit)
- Red Hat Enterprise Linux (RHEL) (64 bit)
- Ubuntu 20.04 LTS

Notes: For more information on Hewlett Packard Enterprise Certified and Supported ProLiant Servers for OS and Virtualization Software and latest listing of software drivers available for your server.
https://www.hpe.com/us/en/servers/server-operating-systems.html

Industry Standard Compliance

- ACPI 6.1 Compliant
- PCIe 4.0 Compliant
- WOL Support
- Microsoft® Logo certifications
- PXE Support
- VGA / Display Port
- USB 3.1 Gen1 Compliant (internal)
- USB 2.0 Compliant (external ports)
- SMBIOS 3.1
- UEFI 2.6
- Redfish API
- IPMI 2.0
- Advanced Encryption Standard (AES)
- Triple Data Encrytion Standard (3DES)
- SNMP v3
- TLS 1.2
- Active Directory v1.0

Standard Features

- UEFI (Unified Extensible Firmware Interface Forum)
- DMTF Systems Management Architecture for Server Hardware Command Line Protocol (SMASH CLP)
- European Union (EU) eco-design regulations for server and storage products, known as Lot 9, go into effect on March 1st, 2020. Among other requirements, for servers this directive establishes power thresholds for idle state, as well as efficiency and performance in active state which vary among configurations. HPE ProLiant Gen10 servers are compliant with Lot9 requirements. For more information regarding HPE Lot 9 conformance, please visit: **https://www.hpe.com/us/en/about/environment/msds-specs-more.html**
- ASHRAE A2

Notes: For additional technical thermal details regarding ambient temperatures, humidity and features support please visit: **http://www.hpe.com/servers/ashrae**.

HPE Motivair Liquid Cooled Doors

HPE Motivair Liquid Cooled Doors can meet critical cooling requirements of [Cray Supercomputers or Apollo 2000 Gen10 Plus or Apollo 6500 Gen10 Plus] servers in HPE racks in the modern datacenter.

HPE Motivair Liquid Cooled Doors is a liquid to air heat exchanger cooling system that is mounted directly to the rear panel of HPE racks.

For additional information, please visit HPE Motivair Liquid Cooled Doors QuickSpecs **here.**

Optional Features

HPE Server UEFI

Unified Extensible Firmware Interface (UEFI) is an industry standard that provides better manageability and more secured configuration than the legacy ROM while interacting with your server at boot time. HPE Apollo 6500 Gen10 Plus servers have a UEFI Class 2 implementation and supports UEFI Mode only.

Notes: The UEFI System Utilities tool is analogous to the HPE ROM-Based Setup Utility (RBSU) of legacy BIOS.
For more information, please visit **http://www.hpe.com/servers/uefi**

UEFI enables numerous new capabilities specific to HPE ProLiant servers such as

- Secure Boot and Secure Start enable for enhanced security
- Operating system specific functionality
- Support for > 2.2 TB (using GPT) boot drives
- USB 3.0 Stack
- Embedded UEFI Shell
- Mass Configuration Deployment Tool using iLO RESTful API that is Redfish API Conformant
- PXE boot support for Ipv6 networks
- Workload Profiles for simple performance optimization

UEFI Boot Mode only

- Firmware TPM
- NVMe Boot Support
- Platform Trust Technology (PTT) can be enabled.
- iSCSI Software Initiator Support.
- HTTP/HTTPs Boot support as a PXE alternative.
- Boot support for option cards that only support a UEFI option ROM

UEFI (Unified Extensible Firmware Interface Forum)

UEFI is the default for the Apollo 6500 Gen10 Plus. Legacy mode will not be supported.
Configure and boot your servers securely with industry standard Unified Extensible Firmware Interface (UEFI).
Learn more at **http://www.hpe.com/servers/uefi.**

Server Utilities

Active Health System

The HPE Active Health System (AHS) is an essential component of iLO management portfolio that provides continuous, proactive health monitoring of HPE servers. Learn more at: **http://www.hpe.com/servers/ahs**

Active Health System Viewer

Use the Active Health System Viewer, a web-based portal, to easily read AHS logs and speed problem resolution with HPE self-repair recommendations. Learn more at **http://www.hpe.com/servers/ahsv**

Smart Update

Keep your servers up to date with HPE's Smart Update solution by using Smart Update Manager (SUM) to optimize the firmware and driver updates of the Service Pack for ProLiant (SPP)

iLO Amplifier Pack

Designed for large enterprise and service provider environments with hundreds of HPE servers, the iLO Amplifier Pack is a free, downloadable open virtual application (OVA) that delivers the power to discover, inventory and update Gen8, Gen9 and Gen10 HPE servers at unmatched speed and scale. Use with an iLO Advanced License to unlock full capabilities.
http://www.hpe.com/servers/iLOamplifierpack

Optional Features

HPE iLO Mobile Application

Enables the ability to access, deploy, and manage your server anytime from anywhere from select smartphones and mobile devices. **http://www.hpe.com/info/ilo/mobileapp**
des remote access through Text Console via SSH, Dynamic power capping, Email-based Alerting and proactive notifications.

iLO RESTful API

iLO RESTful API is Redfish API conformance and offers simplified server management automation such as configuration and maintenance tasks based on modern industry standards. Learn more at: **http://www.hpe.com/info/restfulapi**

RESTful Interface Tool

RESTful Interface tool (iLOREST) is a single scripting tool to provision using iLO RESTful API to discover and deploy servers at scale. **http://www.hpe.com/info/resttool**

HPE iLO Scale-Out

HPE iLO Scale-Out is the preferred license built for web hosting, cloud service providers, and high performance computing data centers, managing massive scale out environments. This license offers sophisticated scripting tools that provides remote access through Text Console via SSH, Dynamic power capping, Email-based Alerting and proactive notifications.

Scripting tools

Provision 1 to many servers using your own scripts to discover and deploy with Scripting Toolkit (STK) for Windows and Linux or Scripting Tools for Windows PowerShell. **http://www.hpe.com/servers/powershell**

HPE Systems Insight Manager (HPE SIM)

Ideal for environments already using HPE SIM, it allows you to monitor the health of your HPE ProLiant Servers and HPE Integrity Servers. Also provides you with basic support for non-HPE servers. HPE SIM also integrates with Smart Update Manager to provide quick and seamless firmware updates. **http://www.hpe.com/info/hpesim**

System Management

HPE iLO 5 Advanced

Embedded, in-depth server-level monitoring and management technology offering system management, service alerting, reporting and remote management as well as enhanced security and power management features for HPE Apollo 6500 systems.
For clustered HPE Apollo 6500 system deployments (for HPC or other emerging workloads such as AI), customers can use the following cluster management software solutions:

HPE Performance Cluster Manager

Fully integrated system management solution offering all the functionalities you need to manage your HPE Linux®-based high performance computing (HPC) clusters, all day everyday.
HPE Performance Cluster Manager aggregates system metrics + remote management from iLO.
The software provides:

- System setup
- Hardware monitoring and management including GPU management
- Image management and software updates
- Power management
- Integration with ISV & open source software solutions

Optional Features

Alternatively, to manage heterogeneous clusters or for customers with additional requirements, HPE also offers:

Bright Cluster Manager
Software from Bright Computing automates the process of building and managing Linux clusters in the data center and in the cloud offering Hardware monitoring and management including GPU management system monitoring and management, provisioning, GPU management, cloud bursting and more. HPE also offers Bright Cluster Manager for Science Data add-on – rapid bare-metal installation of Linux OS of choice and validated DL frameworks on GPU-enabled HPE systems.

HPE BlueData EPIC
GPU-as-a-Service solution from HPE which consolidates GPUs from multiple servers (including HPE Apollo 6500) and makes them available for multiple applications providing the data science teams with the ability to create instant self-service environments for distributed AI, machine learning (ML), and big data analytics.

Security

- UEFI Secure Boot and Secure Start support
- Immutable Silicon Root of Trust
- FIPS 140-2 validation (iLO 5 certification in progress)
- Common Criteria certification (iLO 5 certification in progress)
- Configurable for PCI DSS compliance
- Advanced Encryption Standard (AES) and Triple Data Encryption Standard (3DES) on browser
- Support for Commercial National Security Algorithms (CNSA)
- Tamper-free updates – components digitally signed and verified
- Secure Recovery – recover critical firmware to known good state on detection of compromised firmware
- Ability to rollback firmware
- Secure erase of NAND/User data
- TPM (Trusted Platform Module) 2.0 option
- Bezel Locking Kit option

Warranty

This product is covered by a global limited warranty and supported by HPE Services and a worldwide network of Hewlett Packard Enterprise Authorized Channel Partners. Hardware diagnostic support and repair is available for three years from date of purchase. Support for software and initial setup is available for 90 days from date of purchase. Enhancements to warranty services are available through HPE Services operational services or customized service agreements. Hard drives have either a one year or three year warranty; refer to the specific hard drive QuickSpecs for details.

Notes:

- Server Warranty includes 3-Year Parts, 3-Year Labor, 3-Year Onsite support with next business day response. Warranty repairs may be accomplished through the use of Customer Self Repair (CSR) parts. These parts fall into two categories: 1) Mandatory CSR parts are designed for easy replacement. A travel and labor charge will result when customers decline to replace a Mandatory CSR part; 2) Optional CSR parts are also designed for easy replacement but may involve added complexity. Customers may choose to have Hewlett Packard Enterprise replace Optional CSR parts at no charge.
- Additional information regarding worldwide limited warranty and technical support is available at: **http://www.hpe.com/support/ProLiantServers-warranties**

Accelerator and GPU Information

Hewlett Packard Enterprise supports various accelerators on select HPE Proliant servers to support different workloads. The accelerators enable seamless integration of GPU computing with HPE ProLiant servers for high-performance computing, large data center graphics, deep learning and virtual desktop deployments. These accelerators deliver all of the standard benefits of GPU computing while enabling maximum reliability and tight integration with system monitoring and management tools such as HPE Insight Cluster Management Utility.

Optional Features

Rack and Power Infrastructure

The story may end with servers, but it starts with the foundation that makes compute go – and business grow. We've reinvented our entire portfolio of rack and power products to make IT infrastructure more secure, more practical, and more efficient. In other words, we've created a stronger, smarter, and simpler infrastructure to help you get the most out of your IT equipment. As an industry leader, Hewlett Packard Enterprise is uniquely positioned to address the key concerns of power, cooling, cable management and system access.

HPE G2 Advanced and Enterprise Racks are perfect for the server room or today's modern data center with enhanced airflow and thermal management, flexible cable management, and a 10 year Warranty to support higher density computing.

HPE G2 PDUs offer reliable power in flexible form factors that operate at temperatures up to 60°C, include color-coded outlets and load segments and a low-profile design for optimal access to the rack and support for dense rack environments.

HPE Uninterruptible Power Systems are cost-effective power protection for any type workload. Some UPSs include options for remote management and extended runtime modules so your critical dense data center is covered in power outages.
HPE KVM Solutions include a console and switches designed to work with your server and IT equipment reliably. We've got a cost-effective KVM switch for your first rack and multiple connection IP switches with remote management and security capabilities to keep your data center rack up and running.

Learn more about HPE Racks, KVM, PDUs and UPSs at **HPE Rack and Power Infrastructure.**

Software Development Tools (Programming languages, debuggers, libraries)

HPE Cray Programming Environment – is a fully integrated software development suite offering programmers comprehensive set of tools for developing, porting, debugging, and tuning of their applications so they can shorten application development time and accelerate their performance.

Notes: For more information on HPE Cray Programming Environment **visit this page**

Service and Support

HPE Services

No matter where you are in your digital transformation journey, you can count on HPE Services to deliver the expertise you need when, where and how you need it. From planning to deployment, ongoing operations and beyond, our experts can help you realize your digital ambitions.
https://www.hpe.com/services

Consulting Services

No matter where you are in your journey to hybrid cloud, experts can help you map out your next steps. From determining what workloads should live where, to handling governance and compliance, to managing costs, our experts can help you optimize your operations.
https://www.hpe.com/services/consulting

HPE Managed Services

HPE runs your IT operations, providing services that monitor, operate, and optimize your infrastructure and applications, delivered consistently and globally to give you unified control and let you focus on innovation.
HPE Managed Services | HPE

Operational services

Optimize your entire IT environment and drive innovation. Manage day-to-day IT operational tasks while freeing up valuable time and resources. Meet service-level targets and business objectives with features designed to drive better business outcomes.
https://www.hpe.com/services/operational

HPE Complete Care Service

HPE Complete Care Service is a modular, edge-to-cloud IT environment service designed to help optimize your entire IT environment and achieve agreed upon IT outcomes and business goals through a personalized experience. All delivered by an assigned team of HPE Services experts. HPE Complete Care Service provides:

- A complete coverage approach -- edge to cloud
- An assigned HPE team
- Modular and fully personalized engagement
- Enhanced Incident Management experience with priority access
- Digitally enabled and AI driven customer experience

https://www.hpe.com/services/completecare

HPE Tech Care Service

HPE Tech Care Service is the operational support service experience for HPE products. The service goes beyond traditional support by providing access to product specific experts, an AI driven digital experience, and general technical guidance to not only reduce risk but constantly search for ways to do things better. HPE Tech Care Service delivers a customer-centric, AI driven, and digitally enabled customer experience to move your business forward. HPE Tech Care Service is available in three response levels. Basic, which provides 9x5 business hour availability and a 2-hour response time. Essential which provides a 15-minute response time 24x7 for most enterprise level customers, and Critical which includes a 6-hour repair commitment where available and outage management response for severity 1 incidents.
https://www.hpe.com/services/techcare

Service and Support

HPE Lifecycle Services

HPE Lifecycle Services provide a variety of options to help maintain your HPE systems and solutions at all stages of the product lifecycle. A few popular examples include:

- Lifecycle Install and Startup Services: Various levels for physical installation and power on, remote access setup, installation and startup, and enhanced installation services with the operating system.
- HPE Firmware Update Analysis Service: Recommendations for firmware revision levels for selected HPE products, taking into account the relevant revision dependencies within your IT environment.
- HPE Firmware Update Implementation Service: Implementation of firmware updates for selected HPE server, storage, and solution products, taking into account the relevant revision dependencies within your IT environment.
- Implementation assistance services: Highly trained technical service specialists to assist you with a variety of activities, ranging from design, implementation, and platform deployment to consolidation, migration, project management, and onsite technical forums.
- HPE Service Credits: Access to prepaid services for flexibility to choose from a variety of specialized service activities, including assessments, performance maintenance reviews, firmware management, professional services, and operational best practices.

Notes: To review the list of Lifecycle Services available for your product go to:
https://www.hpe.com/services/lifecycle

For a list of the most frequently purchased services using service credits, see the **HPE Service Credits Menu**

Other Related Services from HPE Services:

HPE Education Services

Training and certification designed for IT and business professionals across all industries. Broad catalogue of course offerings to expand skills and proficiencies in topics ranging from cloud and cybersecurity to AI and DevOps. Create learning paths to expand proficiency in a specific subject. Schedule training in a way that works best for your business with flexible continuous learning options.
https://www.hpe.com/services/training

Defective Media Retention

An option available with HPE Complete Care Service and HPE Tech Care Service and applies only to Disk or eligible SSD/Flash Drives replaced by HPE due to malfunction.

Consult your HPE Sales Representative or Authorized Channel Partner of choice for any additional questions and services options.

Parts and Materials

HPE will provide HPE-supported replacement parts and materials necessary to maintain the covered hardware product in operating condition, including parts and materials for available and recommended engineering improvements.

Parts and components that have reached their maximum supported lifetime and/or the maximum usage limitations as set forth in the manufacturer's operating manual, product quick-specs, or the technical product data sheet will not be provided, repaired, or replaced as part of these services.

How to Purchase Services

Services are sold by Hewlett Packard Enterprise and Hewlett Packard Enterprise Authorized Service Partners:

- Services for customers purchasing from HPE or an enterprise reseller are quoted using HPE order configuration tools.
- Customers purchasing from a commercial reseller can find services at **https://ssc.hpe.com/portal/site/ssc/**

Service and Support

AI Powered and Digitally Enabled Support Experience
Achieve faster time to resolution with access to product-specific resources and expertise through a digital and data driven customer experience

Sign into the HPE Support Center experience, featuring streamlined self-serve case creation and management capabilities with inline knowledge recommendations. You will also find personalized task alerts and powerful troubleshooting support through an intelligent virtual agent with seamless transition when needed to a live support agent.
https://support.hpe.com/hpesc/public/home/signin

Consume IT On Your Terms

HPE GreenLake edge-to-cloud platform brings the cloud experience directly to your apps and data wherever they are—the edge, colocations, or your data center. It delivers cloud services for on-premises IT infrastructure specifically tailored to your most demanding workloads. With a pay-per-use, scalable, point-and-click self-service experience that is managed for you, HPE GreenLake edge-to-cloud platform accelerates digital transformation in a distributed, edge-to-cloud world.

- Get faster time to market
- Save on TCO, align costs to business
- Scale quickly, meet unpredictable demand
- Simplify IT operations across your data centers and clouds

To learn more about HPE Services, please contact your Hewlett Packard Enterprise sales representative or Hewlett Packard Enterprise Authorized Channel Partner. Contact information for a representative in your area can be found at "Contact HPE"
https://www.hpe.com/us/en/contact-hpe.html

For more information
http://www.hpe.com/services

Configuration Information

This section lists some of the steps required to configure a Factory Integrated Model. To ensure only valid configurations are ordered, Hewlett Packard Enterprise recommends the use of an HPE approved configurator. Contact your local sales representative for information on configurable product offerings and requirements.

- Factory Integrated Models must start with a CTO Server.
- FIO indicates that this option is only available as a factory installable option.
- All Factory Integrated Models will be populated with sufficient hard drive blanks based on the number of initial hard drives ordered with the server.
- Some options may not be integrated at the factory. Contact your local sales representative for additional information

Notes:

- Mixing of 2 different processor models is NOT allowed.
- DDR4 speed is the maximum memory speed of the processor. Actual memory speed may depend on the quantity and type of DIMMs installed.
- For more information regarding AMD 2nd and 3rd Gen EPYC™ Series Processors visit: **https://www.amd.com/en/products/epyc-server**
- All AMD 2nd Gen EPYC™ Series Processors can support up to 2TB of memory each on the Apollo 6500 Gen10 Plus system, depending on the chosen DIMMs.
- Certain limitations may apply to select processors, please contact your HPE sales representatives for any questions on processor support needed

Step 1: Choose your CTO Server

HPE ProLiant XL675d Gen10 Plus Configure-to-order Server	P19725-B21
HPE ProLiant XL645d Gen10 Plus Configure-to-order Server	P19726-B21

Notes: Hewlett Packard Enterprise recommends that a minimum of two people are required for all rack installations. Please refer to your installation instructions for proper tools and number of people to use for any installation. You can also opt for HPE server hardware installation.

Step 2a: HPE ProLiant XL675d GPU support

For PCIe GPU Support

Select the PCIe Accelerator Backplane

HPE Apollo 6500 Gen10 Plus PCIe Accelerator Power Backplane Kit	P25874-B21

Select the XL675d PCIe Accelerator Trays

HPE XL675d Gen10 Plus 10 Double Wide PCIe and 16 Single Wide PCIe Accelerator Tray	P25887-B21

Notes: For AMD Instinct™ MI100 – Mixing of GPUs is not allowed.

HPE Apollo 6500 Gen10 Plus PCIe Accelerator and Bracket v2 Cable Kit	P27282-B21
HPE Apollo 6500 Gen10 Plus Power Cable Kit for NVIDIA H100 GPU	P60567-B21

Notes: Select (1) Cable Kit per GPU. P60567-B21 is specific to NVIDIA H100 PCIe GPUs

Notes:

- Select (1) Bridge for every 4 PCIe AMD MI100 GPUs
- For NVIDIA PCIe A40 / A100 – Mixing of GPUs is not allowed.

HPE Apollo 6500 Gen10 Plus PCIe Accelerator and Bracket Cable Kit	P27285-B21

Notes: Select (1) Cable Kit per GPU

NVIDIA Ampere 2-way 2-slot Bridge for HPE	R6V66A

Notes: Select (3) Bridges for every pair of PCIe A100 GPUs

Configuration Information

NVIDIA H100 80GB PCIe Accelerator for HPE	R9S41A
NVIDIA A40 48GB PCIe Non-CEC Accelerator for HPE	R9S37C
NVIDIA A10 PCIe Non-CEC Accelerator for HPE	R9W59A
NVIDIA L40 48GB PCIe Accelerator for HPE	S0K90C
NVIDIA L40S 48GB PCIe Accelerator	S2L70A
AMD Instinct MI210 PCIe Accelerator for HPE	R6V51A

For Modular GPU Support – All Modular configurations are Factory integrated.

Select the Modular Accelerator Backplane

HPE Apollo 6500 Gen10 Plus Modular Accelerator Power Backplane Kit	P25872-B21

Select the XL675d Modular Accelerator Tray

HPE XL675d Gen10 Plus Modular Accelerator Tray	P25668-B21

Notes: For Air Cooled NVIDIA A100

Step 2b: HPE ProLiant XL645d GPU Support

For PCIe GPU Support	**HPE P/N**

Select the XL645d PCIe Accelerator Trays

HPE XL645d Gen10 Plus PCIe Accelerator Tray	P27772-B21
HPE Apollo 6500 Gen10 Plus PCIe Accelerator and Bracket v2 Cable Kit	P27282-B21

Notes: Select (1) Cable Kit per GPU

AMD 3rd Generation Infinity Fabric 4-way Bridge for HPE	R9B39A

Notes:
- Select (1) Bridge for every 4 PCIe AMD MI100 GPUs
- Mixing of GPUs is not allowed.

HPE Apollo 6500 Gen10 Plus PCIe Accelerator and Bracket Cable Kit	P27285-B21
HPE Apollo 6500 Gen10 Plus Power Cable Kit for NVIDIA H100 GPU	P60567-B21

Notes: Select (1) Cable Kit per GPU. P60567-B21 is specific to NVIDIA H100 PCIe GPUs

NVIDIA Ampere 2-way 2-slot Bridge for HPE	R6V66A

Notes: Select (3) Bridges for every pair of NVIDIA PCIe GPUs

NVIDIA H100 80GB PCIe Accelerator for HPE	R9S41A
NVIDIA A40 48GB PCIe Non-CEC Accelerator for HPE	R9S37C
NVIDIA A10 PCIe Non-CEC Accelerator for HPE	R9W59A
AMD Instinct MI210 PCIe Accelerator for HPE	R6V51A

For Modular GPU Support – All Modular configurations are Factory integrated.

Select the XL645d Modular Accelerator Trays

HPE XL645d Gen10 Plus Modular Accelerator Tray	P27769-B21
HPE XL645d Gen10 Plus Modular Accelerator Power Cable Kit	P31489-B21

Notes: Select (1) Cable Kit per each Accelerator Tray

For Air Cooled HGX™ A100

NVIDIA HGX A100 40GB 4-GPU Air Cooled FIO Baseboard for HPE	R3V35A

Configuration Information

For Liquid Cooled HGX™ A100

Step 3a: Choose HPE ProLiant XL675d Processors

Must select two (2) of the following processors.

Air- Cooled Processor Options

AMD EPYC 7742 2.25GHz 64-core 225W Processor Kit for HPE Apollo 6500 Gen10 Plus	P27249-B21
AMD EPYC 7702 2.0GHz 64-core 200W Processor Kit for HPE Apollo 6500 Gen10 Plus	P27250-B21
AMD EPYC 7642 2.3GHz 48-core 225W Processor Kit for HPE Apollo 6500 Gen10 Plus	P27252-B21
AMD EPYC 7552 2.2GHz 48-core 200W Processor Kit for HPE Apollo 6500 Gen10 Plus	P27253-B21
AMD EPYC 7542 2.9GHz 32-core 225W Processor Kit for HPE Apollo 6500 Gen10 Plus	P27254-B21
AMD EPYC 7502 2.5GHz 32-core 180W Processor Kit for HPE Apollo 6500 Gen10 Plus	P27255-B21
AMD EPYC 7532 2.4GHz 32-core 200W Processor Kit for HPE Apollo 6500 Gen10 Plus	P27256-B21
AMD EPYC 7452 2.35GHz 32-core 155W Processor Kit for HPE Apollo 6500 Gen10 Plus	P27257-B21
AMD EPYC 7F72 3.2GHz 24-core 240W Processor Kit for HPE Apollo 6500 Gen10 Plus	P27258-B21
AMD EPYC 7402 2.8GHz 24-core 180W Processor Kit for HPE Apollo 6500 Gen10 Plus	P27259-B21
AMD EPYC 7352 2.3GHz 24-core 155W Processor Kit for HPE Apollo 6500 Gen10 Plus	P27260-B21
AMD EPYC 7F52 3.5GHz 16-core 240W Processor Kit for HPE Apollo 6500 Gen10 Plus	P27261-B21
AMD EPYC 7302 3.0GHz 16-core 155W Processor Kit for HPE Apollo 6500 Gen10 Plus	P27262-B21
AMD EPYC 7F32 3.7GHz 8-core 180W Processor Kit for HPE Apollo 6500 Gen10 Plus	P27263-B21
AMD EPYC 7262 3.2GHz 8-core 155W Processor Kit for HPE Apollo 6500 Gen10 Plus	P27264-B21
AMD EPYC 7662 2.0GHz 64-core 225W Processor Kit for HPE Apollo 6500 Gen10 Plus	P27251-B21
AMD EPYC 7343 3.2GHz 16-core 190W Processor Kit for HPE Apollo 6500 Gen10 Plus	P40585-B21
AMD EPYC 7413 2.65GHz 24-core 180W Processor Kit for HPE Apollo 6500 Gen10 Plus	P40586-B21
AMD EPYC 7453 2.75GHz 28-core 225W Processor Kit for HPE Apollo 6500 Gen10 Plus	P40587-B21
AMD EPYC 7513 2.6GHz 32-core 200W Processor Kit for HPE Apollo 6500 Gen10 Plus	P40589-B21
AMD EPYC 7643 2.3GHz 48-core 225W Processor Kit for HPE Apollo 6500 Gen10 Plus	P40591-B21
AMD EPYC 7663 2.0GHz 56-core 240W Processor Kit for HPE Apollo 6500 Gen10 Plus	P40592-B21
AMD EPYC 7763 2.45GHz 64-core 280W Processor Kit for HPE Apollo 6500 Gen10 Plus	P40594-B21
AMD EPYC 72F3 3.7GHz 8-core 180W Processor Kit for HPE Apollo 6500 Gen10 Plus	P40595-B21
AMD EPYC 73F3 3.5GHz 16-core 240W Processor Kit for HPE Apollo 6500 Gen10 Plus	P40596-B21
AMD EPYC 74F3 3.2GHz 24-core 240W Processor Kit for HPE Apollo 6500 Gen10 Plus	P40597-B21
AMD EPYC 75F3 2.95GHz 32-core 280W Processor Kit for HPE Apollo 6500 Gen10 Plus	P40598-B21

Step 3b: Choose HPE ProLiant XL645d Processors

Must select one of the following processors for each server.

Air-Cooled Processor Options

AMD EPYC 7302P 3.0GHz 16-core 155W Processor Kit for HPE Apollo 6500 Gen10 Plus	P29671-B21
AMD EPYC 7402P 2.8GHz 24-core 180W Processor Kit for HPE Apollo 6500 Gen10 Plus	P29672-B21
AMD EPYC 7502P 2.5GHz 32-core 180W Processor Kit for HPE Apollo 6500 Gen10 Plus	P29673-B21
AMD EPYC 7702P 2.0GHz 64-core 200W Processor Kit for HPE Apollo 6500 Gen10 Plus	P29674-B21
AMD EPYC 7742 2.25GHz 64-core 225W Processor Kit for HPE Apollo 6500 Gen10 Plus	P27249-B21
AMD EPYC 7662 2.0GHz 64-core 225W Processor Kit for HPE Apollo 6500 Gen10 Plus	P27251-B21
AMD EPYC 7642 2.3GHz 48-core 225W Processor Kit for HPE Apollo 6500 Gen10 Plus	P27252-B21
AMD EPYC 7552 2.2GHz 48-core 200W Processor Kit for HPE Apollo 6500 Gen10 Plus	P27253-B21

Configuration Information

AMD EPYC 7542 2.9GHz 32-core 225W Processor Kit for HPE Apollo 6500 Gen10 Plus	P27254-B21
AMD EPYC 7532 2.4GHz 32-core 200W Processor Kit for HPE Apollo 6500 Gen10 Plus	P27256-B21
AMD EPYC 7452 2.35GHz 32-core 155W Processor Kit for HPE Apollo 6500 Gen10 Plus	P27257-B21
AMD EPYC 7F72 3.2GHz 24-core 240W Processor Kit for HPE Apollo 6500 Gen10 Plus	P27258-B21
AMD EPYC 7352 2.3GHz 24-core 155W Processor Kit for HPE Apollo 6500 Gen10 Plus	P27260-B21
AMD EPYC 7F52 3.5GHz 16-core 240W Processor Kit for HPE Apollo 6500 Gen10 Plus	P27261-B21
AMD EPYC 7F32 3.7GHz 8-core 180W Processor Kit for HPE Apollo 6500 Gen10 Plus	P27263-B21
AMD EPYC 7262 3.2GHz 8-core 155W Processor Kit for HPE Apollo 6500 Gen10 Plus	P27264-B21
AMD EPYC 7313P 3.0GHz 16-core 155W Processor Kit for HPE Apollo 6500 Gen10 Plus	P40599-B21
AMD EPYC 7443P 2.85GHz 24-core 200W Processor Kit for HPE Apollo 6500 Gen10 Plus	P40600-B21
AMD EPYC 7543P 2.8GHz 32-core 225W Processor Kit for HPE Apollo 6500 Gen10 Plus	P40601-B21
AMD EPYC 7713P 2.0GHz 64-core 225W Processor Kit for HPE Apollo 6500 Gen10 Plus	P40602-B21
AMD EPYC 7343 3.2GHz 16-core 190W Processor Kit for HPE Apollo 6500 Gen10 Plus	P40585-B21
AMD EPYC 7413 2.65GHz 24-core 180W Processor Kit for HPE Apollo 6500 Gen10 Plus	P40586-B21
AMD EPYC 7453 2.75GHz 28-core 225W Processor Kit for HPE Apollo 6500 Gen10 Plus	P40587-B21
AMD EPYC 7513 2.6GHz 32-core 200W Processor Kit for HPE Apollo 6500 Gen10 Plus	P40589-B21
AMD EPYC 7643 2.3GHz 48-core 225W Processor Kit for HPE Apollo 6500 Gen10 Plus	P40591-B21
AMD EPYC 7663 2.0GHz 56-core 240W Processor Kit for HPE Apollo 6500 Gen10 Plus	P40592-B21
AMD EPYC 7763 2.45GHz 64-core 280W Processor Kit for HPE Apollo 6500 Gen10 Plus	P40594-B21
AMD EPYC 72F3 3.7GHz 8-core 180W Processor Kit for HPE Apollo 6500 Gen10 Plus	P40595-B21
AMD EPYC 73F3 3.5GHz 16-core 240W Processor Kit for HPE Apollo 6500 Gen10 Plus	P40596-B21
AMD EPYC 74F3 3.2GHz 24-core 240W Processor Kit for HPE Apollo 6500 Gen10 Plus	P40597-B21
AMD EPYC 75F3 2.95GHz 32-core 280W Processor Kit for HPE Apollo 6500 Gen10 Plus	P40598-B21
AMD EPYC 7773X 2.2GHz 64-core 280W Processor Kit for HPE Apollo 6500 Gen10 Plus	P47859-B21
AMD EPYC 7573X 2.8GHz 32-core 280W Processor Kit for HPE Apollo 6500 Gen10 Plus	P47861-B21
AMD EPYC 7473X 2.8GHz 24-core 240W Processor Kit for HPE Apollo 6500 Gen10 Plus	P47862-B21
AMD EPYC 7373X 3.1GHz 16-core 240W Processor Kit for HPE Apollo 6500 Gen10 Plus	P47863-B21

Liquid-Cooled Processor Options

AMD EPYC 7702P (2.0GHz/64-core/200W) FIO DLC Processor Kit for HPE ProLiant XL645d Gen10 Plus	P29678-L22
AMD EPYC 7262 (3.2GHz/8-core/155W) FIO DLC Processor Kit for HPE ProLiant XL645d Gen10 Plus	P29680-L22
AMD EPYC 7532 (2.4GHz/32-core/200W) FIO DLC Processor Kit for HPE ProLiant XL645d Gen10 Plus	P29683-L22
AMD EPYC 7H12 (2.6GHz/64-core/280W) FIO DLC Processor Kit for HPE ProLiant XL645d Gen10 Plus	P29691-L22
AMD EPYC 7313P 3.0GHz 16-core 155W FIO DLC Processor Kit for HPE ProLiant XL645d Gen10 Plus	P40584-L22
AMD EPYC 7343 3.2GHz 16-core 190W FIO DLC Processor Kit for HPE ProLiant XL645d Gen10 Plus	P40585-L22
AMD EPYC 7413 2.65GHz 24-core 180W FIO DLC Processor Kit for HPE ProLiant XL645d Gen10 Plus	P40586-L22
AMD EPYC 7453 2.75GHz 28-core 225W FIO DLC Processor Kit for HPE ProLiant XL645d Gen10 Plus	P40587-L22
AMD EPYC 7443P 2.85GHz 24-core 200W FIO DLC Processor Kit for HPE ProLiant XL645d Gen10 Plus	P40588-L22
AMD EPYC 7513 2.6GHz 32-core 200W FIO DLC Processor Kit for HPE ProLiant XL645d Gen10 Plus	P40589-L22
AMD EPYC 7543P 2.8GHz 32-core 225W FIO DLC Processor Kit for HPE ProLiant XL645d Gen10 Plus	P40590-L22
AMD EPYC 7643 2.3GHz 48-core 225W FIO DLC Processor Kit for HPE ProLiant XL645d Gen10 Plus	P40591-L22
AMD EPYC 7663 2.0GHz 56-core 240W FIO DLC Processor Kit for HPE ProLiant XL645d Gen10 Plus	P40592-L22
AMD EPYC 7713P 2.0GHz 64-core 225W FIO DLC Processor Kit for HPE ProLiant XL645d Gen10 Plus	P40593-L22
AMD EPYC 7763 2.45GHz 64-core 280W FIO DLC Processor Kit for HPE ProLiant XL645d Gen10 Plus	P40594-L22
AMD EPYC 72F3 3.7GHz 8-core 180W FIO DLC Processor Kit for HPE ProLiant XL645d Gen10 Plus	P40595-L22

Configuration Information

AMD EPYC 73F3 3.5GHz 16-core 240W FIO DLC Processor Kit for HPE ProLiant XL645d Gen10 Plus	P40596-L22
AMD EPYC 74F3 3.2GHz 24-core 240W FIO DLC Processor Kit for HPE ProLiant XL645d Gen10 Plus	P40597-L22
AMD EPYC 75F3 2.95GHz 32-core 280W FIO DLC Processor Kit for HPE ProLiant XL645d Gen10 Plus	P40598-L22
AMD EPYC 7773X 2.2GHz 64-core 280W FIO DLC Processor Kit for HPE ProLiant XL645d Gen10 Plus	P47859-L22
AMD EPYC 7573X 2.8GHz 32-core 280W FIO DLC Processor Kit for HPE ProLiant XL645d Gen10 Plus	P47861-L22
AMD EPYC 7473X 2.8GHz 24-core 240W FIO DLC Processor Kit for HPE ProLiant XL645d Gen10 Plus	P47862-L22
AMD EPYC 7373X 3.1GHz 16-core 240W FIO DLC Processor Kit for HPE ProLiant XL645d Gen10 Plus	P47863-L22

Notes:

- Mixing of 2 different processor models is NOT allowed.
- For more information regarding AMD 2nd Gen EPYC™ Series Processor visit: **https://www.amd.com/en/products/epyc-server**
- All AMD 2nd Gen EPYC™ Series Processors can support up to 2TB of memory each on the Apollo 6500 Gen10 Plus system, depending on the chosen DIMMs.
- Certain limitations may apply to select processors, please contact your HPE sales representatives for any questions on processor support needed.

Configuration Information

Step 4: Choose Memory Options

Please select two (2) or more memory kits from below.

For new Gen10 Plus memory population rule whitepaper and optimal memory performance guidelines, please go to:
https://h20195.www2.hpe.com/v2/getdocument.aspx?docname=a00038346enw&

Notes: Maximum memory capacity and speed per processor is dependent on processor model selection or limitation.

HPE 16GB (1x16GB) Single Rank x4 DDR4-3200 CAS-22-22-22 Registered Smart Memory Kit	P07640-H21
HPE 16GB (1x16GB) Dual Rank x8 DDR4-3200 CAS-22-22-22 Registered Smart Memory Kit	P07642-H21
HPE 32GB (1x32GB) Dual Rank x4 DDR4-3200 CAS-22-22-22 Registered Smart Memory Kit	P07646-H21
HPE 64GB (1x64GB) Dual Rank x4 DDR4-3200 CAS-22-22-22 Registered Smart Memory Kit	P07650-H21
HPE 128GB (1x128GB) Quad Rank x4 DDR4-3200 CAS-22-22-22 Load Reduced Smart Memory Kit	P07652-H21
HPE 256GB (1x256GB) Octal Rank x4 DDR4-3200 CAS-26-22-22 Load Reduced 3DS Smart Memory Kit	P07654-H21

Notes:

- Memory DIMM availability with a server platform is dependent upon completion of certification testing.
- The maximum memory speed is a function of the memory type, memory configuration, and processor model.
- Mixing of x4 and x8 memory is not allowed.
- 3200 MT/s memory SKUs offer a transfer rate of 3200 MT/s at 1 DIMM per channel and 2933 MT/s at 2 DIMMs per channel.

General Memory Population Rules and Guidelines

- Install DIMMs only if the corresponding processor is installed.
- If only one processor is installed in a two-processor system, only half of the DIMM slots are available.
- To maximize performance, it is recommended to balance the total memory capacity between all installed processors.
- When two processors are installed, balance the DIMMs across the two processors.
- White DIMM slots denote the first slot to be populated in a channel.
- The maximum memory speed is a function of the memory type, memory configuration, and processor model.
- The maximum memory capacity is a function of the number of DIMM slots on the platform, the largest DIMM capacity
- qualified on the platform, the number and model of installed processors qualified on the platform.
- For details on the HPE Server Memory Options Population Rules, visit: **https://www.hpe.com/docs/amd-population-rules-Gen10plus**
- To realize the performance memory capabilities listed in this document, HPE DDR4 Smart Memory is required.
- For additional information, please see the: **HPE DDR4 Smart Memory QuickSpecs**
- For details on the HPE Server Memory speed, visit: **http://www.hpe.com/docs/amd-speed-tables**

Additional Options

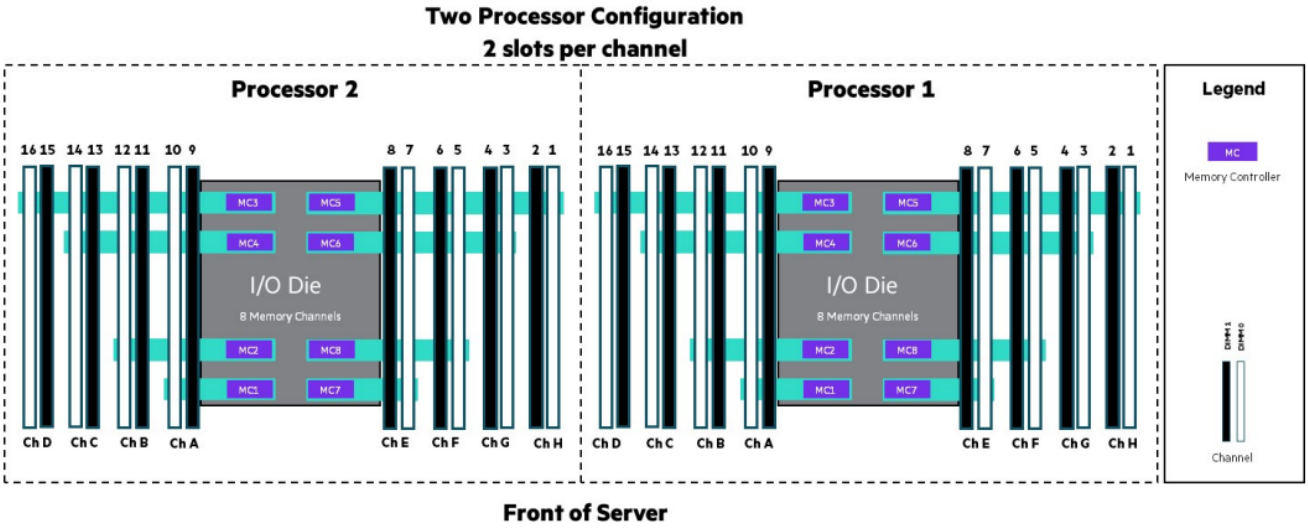

XL675d

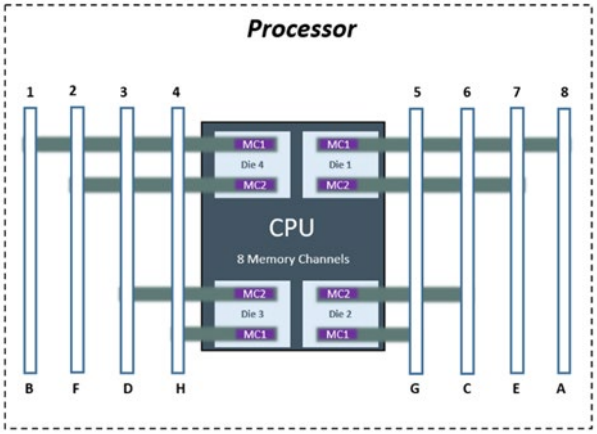

XL645d

Step 5: Choose Storage Options

Drive Cage

HPE Apollo 6500 Gen10 Plus 8SFF SAS/SATA Standard Smart Carrier Drive Backplane Kit	P25877-B21

Notes: This kit provides support for up to 8 SFF SAS/SATA per Box.

HPE Apollo 6500 Gen10 Plus 8SFF NVMe/SAS/SATA U.3 Premium Smart Carrier Drive Backplane Kit	P25879-B21

Notes: This kit provides support for up to 6 SFF NVMe or up to 6 SFF NVMe and 2 SFF SAS/SATA drives. Maximum of 1 Premium kit supported.

HPE ProLiant XL675d Smart Array Controllers

HPE Smart Array P408e-p SR Gen10 (8 External Lanes/4GB Cache) 12G SAS PCIe Plug-in Controller	804405-B21
HPE Smart Array P408i-a SR Gen10 (8 Internal Lanes/2GB Cache) 12G SAS Modular Controller	804331-B21
HPE Smart Array P816i-a SR Gen10 (16 Internal Lanes/4GB Cache/SmartCache) 12G SAS Modular Controller	804338-B21
HPE Smart Array E208e-p SR Gen10 (8 External Lanes/No Cache) 12G SAS PCIe Plug-in Controller	804398-B21

Additional Options

HPE Smart Array E208i-a SR Gen10 (8 Internal Lanes/No Cache) 12G SAS Modular Controller	804326-B21

HPE ProLiant XL645d Smart Array Controllers

HPE Smart Array E208i-p SR Gen10 (8 Internal Lanes/No Cache) 12G SAS PCIe Plug-in Controller	804394-B21
HPE Smart Array E208e-p SR Gen10 (8 External Lanes/No Cache) 12G SAS PCIe Plug-in Controller	804398-B21
HPE Smart Array P408e-p SR Gen10 (8 External Lanes/4GB Cache) 12G SAS PCIe Plug-in Controller	804405-B21
HPE Smart Array P408i-p SR Gen10 (8 Internal Lanes/2GB Cache) 12G SAS PCIe Plug-in Controller	830824-B21

Notes:

- All performance RAID controllers are supported by the HPE Smart Storage Battery (782961-B21), which supports multiple devices and is sold separately.
- Flexible Smart Array controllers do not consume a PCIe slot
- PCIe Smart Array and NVME both use the single PCIe slot on the system board. Only one can be supported at a time. HPE recommends the Flexible Smart Array in this case.

HPE ProLiant XL675d Boot Device

HPE NS204i-p x2 Lanes NVMe PCIe3 x8 OS Boot Device	P12965-B21

Notes: This boot device is a PCIe add-in card that enables dedicated RAID1 operating system mirroring on the two included 480GB M.2 NVMe SSDs.

HPE ProLiant XL645d Boot Controller

HPE NS204i-t Gen10 Plus x2 Lanes NVMe PCIe 3 x8 Boot Controller	P20292-B21

HPE Smart Storage Battery

HPE 12W Smart Storage Lithium-ion Battery	782961-B21

Notes: One kit required for use with any HPE Smart Array.

HPE ProLiant XL675d Storage Cables

HPE XL675d Gen10 Plus 8SFF Smart Array SR100i SATA Cable Kit	P31480-B21
HPE XL675d Gen10 Plus 16SFF Smart Array SAS Cable Kit	P31490-B21
HPE XL675d Gen10 Plus 6SFF Switch Connected x4 NVMe Cable Kit	P31491-B21
HPE XL675d Gen10 Plus 8SFF Smart Array SAS Cable Kit	P27764-B21
HPE XL675d Gen10 Plus 2SFF Embedded SATA and 6SFF Switch Connected x4 NVMe Cable Kit	P39951-B21
HPE XL675d Gen10 Plus 2SFF Smart Array SAS and 6SFF Switch Connected x4 NVMe Cable Kit	P39952-B21

HPE ProLiant XL645d Storage Cables

HPE XL645d Gen10 Plus 2SFF Smart Array SR100i SATA and 2SFF CPU Connected x4 NVMe Cable Kit	P31483-B21
HPE XL645d Gen10 Plus 2SFF Smart Array SAS and 2SFF CPU Connected x4 NVMe Cable Kit	P31486-B21
HPE XL645d Gen10 Plus 8SFF Embedded SATA Controller Cable Kit	P31487-B21
HPE XL645d Gen10 Plus 8SFF Smart Array SAS Cable Kit	P31488-B21
HPE XL645d Gen10 Plus M.2 Cable Kit	P31481-B21
HPE XL645d Gen10 Plus 2SFF Smart Array SATA and 6 Switch Connected x4 NVMe Cable Kit	P31482-B21
HPE Apollo 6500 Gen10 Plus M.2 2 x 4NVMe Cable Kit	P59752-B21

Notes:

- For Linux users, HPE offers a solution that uses in-distro open-source software to create a two-disk RAID 1 boot volume. For more information visit: **https://downloads.linux.hpe.com/SDR/project/lsrrb/**
- One kit required for use with Embedded SATA using AHCI
- One kit will support up to two drive bays

Additional Options

HPE Host Bus Adapters

Emulex Fibre Channel HBAs

HPE SN1200E 16Gb Single Port Fibre Channel Host Bus Adapter	Q0L13A
HPE SN1200E 16Gb Dual Port Fibre Channel Host Bus Adapter	Q0L14A
HPE SN1610E 32Gb 1-port Fibre Channel Host Bus Adapter	R2J62A
HPE SN1610E 32Gb 2-port Fibre Channel Host Bus Adapter	R2J63A

QLogic Fibre Channel HBAs

HPE SN1100Q 16Gb Single Port Fibre Channel Host Bus Adapter	P9D93A
HPE SN1100Q 16Gb Dual Port Fibre Channel Host Bus Adapter	P9D94A
HPE SN1610Q 32Gb 1-port Fibre Channel Host Bus Adapter	R2E08A
HPE SN1610Q 32Gb 2-port Fibre Channel Host Bus Adapter	R2E09A

Notes: For the complete listing of Fibre Channel Converged Network Adapters please see:
https://www.hpe.com/us/en/product-catalog/servers/adapters/pip.models.hpe-storefabric-converged-networkadapters.4118472.html

---

Step 6: Choose Power Supplies

Select up to two (2) power supply kits below, according to configuration. Power Supply Kits cannot be mixed.

For Modular GPU Support - Air Cooled HGX™ A100 - All Modular configurations are Factory integrated.

HPE Apollo 6500 Gen10 Plus Modular Accelerator Platinum Hot Plug N Power Supply Kit	P31662-B21
HPE Apollo 6500 Gen10 Plus Modular Accelerator Titanium Hot Plug Power Supply Kit	P49948-B21

Notes: Contains (1) P24681-B21 – 12v 3000W Power Supply & (2) P25875-B21 – 54v 3000W Power Supplies.
For Nonredundant power, select (1) of these kits. For Redundant power, select (2).

For PCIe GPU Support - AMD Instinct™ MI100 / NVIDIA PCIe A100

HPE Apollo 6500 Gen10 Plus PCIe Accelerator Platinum Hot Plug N Power Supply Kit	P31664-B21
HPE Apollo 6500 Gen10 Plus PCIe Accelerator Titanium Hot Plug Power Supply Kit	P49947-B21

Notes: Contains (2) P24681-B21 – 12v 3000W Power Supplies.
For Nonredundant power, select (1) of these kits. For Redundant power, select (2).

Power Supplies – Individual Replacements

HPE 3000W 200-277VAC Platinum Hot Plug Power Supply	P24681-B21
HPE 3000W 54V Output 200-277VAC Platinum Hot Plug Power Supply	P25875-B21
HPE 3000W 12V Output 200-277VAC Titanium Hot Plug Power Supply	P47526-B21

Power Cords

HPE SDG300 - C20 250V 16Amp Black 0.5m Jumper Cord	P24672-B21
HPE SDG300 - C20 250V 16Amp Black 1m Jumper Cord	P24675-B21
HPE SDG300 - C20 250V 16Amp Black 2m Jumper Cord	P24678-B21
HPE SDG23A-SDG23B 277V 0.76m Jumper Cord	P9B75A
HPE SDG23A-SDG23B 277V 2.0m Jumper Cord	P9B77A

Additional Options

Step 7: Choose additional options for Factory Integration from Core and Additional Options sections below

Hard Drive Selection

All HDD options listed are compatible on both the XL675d and XL645d servers.

Midline – 6G SATA – SFF Drives

HPE 2TB SATA 6G Business Critical 7.2K SFF SC 1-year Warranty 512e HDD	765455-H21

Midline – 12G SAS – SFF Drives

HPE 2TB SAS 12G Business Critical 7.2K SFF SC 1-year Warranty 512e HDD	765466-H21
HPE 1TB SAS 12G Business Critical 7.2K SFF SC 1-year Warranty HDD	832514-H21

Enterprise – 12G SAS – SFF Drives

HPE 300GB SAS 12G Mission Critical 15K SFF SC 3-year Warranty Multi Vendor HDD	870753-H21
HPE 600GB SAS 12G Mission Critical 15K SFF SC 3-year Warranty Multi Vendor HDD	870757-H21
HPE 900GB SAS 12G Mission Critical 15K SFF SC 3-year Warranty Multi Vendor HDD	870759-H21
HPE 300GB SAS 12G Mission Critical 10K SFF SC 3-year Warranty Multi Vendor HDD	872475-H21
HPE 600GB SAS 12G Mission Critical 10K SFF SC 3-year Warranty Multi Vendor HDD	872477-H21
HPE 1.2TB SAS 12G Mission Critical 10K SFF SC 3-year Warranty Multi Vendor HDD	872479-H21
HPE 1.8TB SAS 12G Mission Critical 10K SFF SC 3-year Warranty 512e Multi Vendor HDD	872481-H21

Hard Drive Blank Kits

HPE Small Form Factor Hard Drive Blank Kit	666987-B21

Notes: Hard Drives require the selection of appropriate Drive Cage.

SSD Selection

To streamline the configuration process for HPE ProLiant Gen10 servers and to provide the best product availability, HPE recommends SSDs from the list located here: **http://www.hpe.com/products/recommend**.

All SSD options listed are compatible on both the XL675d and XL645d servers, except where explicitly marked.

Read Intensive – 12G SAS – SFF – Solid State Drives

HPE 960GB SAS 12G Read Intensive SFF SC Value SAS Multi Vendor SSD	P36997-H21
HPE 1.92TB SAS 12G Read Intensive SFF SC Value SAS Multi Vendor SSD	P36999-H21
HPE 3.84TB SAS 12G Read Intensive SFF SC Value SAS Multi Vendor SSD	P37001-H21
HPE 7.68TB SAS 12G Read Intensive SFF SC Value SAS Multi Vendor SSD	P37003-H21

Mixed Use – 12G SAS – SFF – Solid State Drives

HPE 960GB SAS 12G Mixed Use SFF SC Value SAS Multi Vendor SSD	P37005-H21
HPE 1.92TB SAS 12G Mixed Use SFF SC Value SAS Multi Vendor SSD	P37011-H21
HPE 3.84TB SAS 12G Mixed Use SFF SC Value SAS Multi Vendor SSD	P37017-H21

Mixed Use – 6G SATA – SFF – Solid State Drives

HPE 480GB SATA 6G Mixed Use SFF SC Multi Vendor SSD	P18432-H21
HPE 960GB SATA 6G Mixed Use SFF SC Multi Vendor SSD	P18434-H21
HPE 1.92TB SATA 6G Mixed Use SFF SC Multi Vendor SSD	P18436-H21
HPE 3.84TB SATA 6G Mixed Use SFF SC Multi Vendor SSD	P18438-H21

Read Intensive – 6G SATA – SFF – Solid State Drives

HPE 240GB SATA 6G Read Intensive SFF SC Multi Vendor SSD	P18420-H21
HPE 480GB SATA 6G Read Intensive SFF SC Multi Vendor SSD	P18422-H21
HPE 960GB SATA 6G Read Intensive SFF SC Multi Vendor SSD	P18424-H21
HPE 1.92TB SATA 6G Read Intensive SFF SC Multi Vendor SSD	P18426-H21
HPE 3.84TB SATA 6G Read Intensive SFF SC Multi Vendor SSD	P18428-H21
HPE 7.68TB SATA 6G Read Intensive SFF SC Multi Vendor SSD	P18430-H21

Additional Options

Read Intensive – NVMe – SFF – Solid State Drives

HPE 480GB NVMe Gen3 Mainstream Performance Read Intensive M.2 Multi Vendor SSD	P40513-H21
HPE 960GB NVMe Gen3 Mainstream Performance Read Intensive M.2 Multi Vendor SSD	P40514-H21
HPE 1.92TB NVMe Gen3 Mainstream Performance Read Intensive M.2 Multi Vendor SSD	P40515-H21
HPE 3.84TB NVMe Gen4 Mainstream Performance Read Intensive SFF SC U.3 Static V2 Multi Vendor SSD	P64845-H21
HPE 480GB NVMe Gen4 Mainstream Performance Read Intensive M.2 PM9A3 SSD	P69543-H21

Mixed Use – NVMe – SFF – Solid State Drives

HPE 1.6TB NVMe Gen4 Mainstream Performance Mixed Use SFF SC U.3 Static V2 Multi Vendor SSD	P65003-H21
HPE 3.2TB NVMe Gen4 Mainstream Performance Mixed Use SFF SC U.3 Static V2 Multi Vendor SSD	P65011-H21

HPE ProLiant XL675d Networking

Mellanox MCX512F-ACHT Ethernet 10/25Gb 2-port SFP28 Adapter for HPE	P13188-B21
Intel I350-T4 Ethernet 1Gb 4-port BASE-T Adapter for HPE	P21106-B21
Mellanox MCX623106AS-CDAT Ethernet 100Gb 2-port QSFP56 Adapter for HPE	P25960-B21
Intel X710-DA2 Ethernet 10Gb 2-port SFP+ Adapter for HPE	P28787-B21
HPE Ethernet 100Gb 1-port QSFP28 PCIe3 x16 MCX515A-CCAT Adapter	P31246-H21

HPE ProLiant XL675d InfiniBand

HPE InfiniBand HDR/Ethernet 200Gb 1-port QSFP56 PCIe4 x16 MCX653105A-HDAT Adapter	P23664-H21
HPE InfiniBand HDR/Ethernet 200Gb 2-port QSFP56 PCIe4 x16 MCX653106A-HDAT Adapter	P31324-H21
HPE InfiniBand HDR100/Ethernet 100Gb 1-port QSFP56 PCIe4 x16 MCX653105A-ECAT Adapter	P23665-H21
HPE InfiniBand HDR100/Ethernet 100Gb 2-port QSFP56 PCIe4 x16 MCX653106A-ECAT Adapter	P23666-H21
HPE InfiniBand NDR200/Ethernet 200Gb 1-port OSFP PCIe5 x16 MCX75310AAS-HEAT Adapter	P45642-H22

HPE ProLiant XL645d Networking

Intel X710-DA2 Ethernet 10Gb 2-port SFP+ OCP3 Adapter for HPE	P28778-B21
Intel I350-T4 Ethernet 1Gb 4-port BASE-T OCP3 Adapter for HPE	P08449-B21
Mellanox MCX562A-ACAI Ethernet 10/25Gb 2-port SFP28 OCP3 Adapter for HPE	P10112-B21
Mellanox MCX512F-ACHT Ethernet 10/25Gb 2-port SFP28 Adapter for HPE	P13188-B21
Intel I350-T4 Ethernet 1Gb 4-port BASE-T Adapter for HPE	P21106-B21
Mellanox MCX623106AS-CDAT Ethernet 100Gb 2-port QSFP56 Adapter for HPE	P25960-B21
Intel X710-DA2 Ethernet 10Gb 2-port SFP+ Adapter for HPE	P28787-B21
HPE Ethernet 100Gb 1-port QSFP28 PCIe3 x16 MCX515A-CCAT Adapter	P31246-H21

HPE ProLiant XL645d InfiniBand

HPE InfiniBand HDR/Ethernet 200Gb 1-port QSFP56 PCIe4 x16 OCP3 MCX653435A-HDAI Adapter	P31323-H21
HPE InfiniBand HDR/Ethernet 200Gb 2-port QSFP56 PCIe4 x16 OCP3 MCX653436A-HDAI Adapter	P31348-H21
HPE InfiniBand HDR/Ethernet 200Gb 1-port QSFP56 PCIe4 x16 MCX653105A-HDAT Adapter	P23664-H21
HPE InfiniBand HDR/Ethernet 200Gb 2-port QSFP56 PCIe4 x16 MCX653106A-HDAT Adapter	P31324-H21
HPE InfiniBand HDR100/Ethernet 100Gb 1-port QSFP56 PCIe4 x16 MCX653105A-ECAT Adapter	P23665-H21
HPE InfiniBand HDR100/Ethernet 100Gb 2-port QSFP56 PCIe4 x16 MCX653106A-ECAT Adapter	P23666-H21

Notes:

- A minimum of two Gigabytes (2 GB) of server memory is required per each adapter.
- Direct Attach Cable (DAC) for copper environments or fiber transceivers and cables for fiber-optic environments must be purchased separately. Please see the related NIC QuickSpecs for Technical Specifications and additional information: **http://www.hpe.com/us/en/product-catalog/servers/server-adapters.hits-12.html**.

Additional Options

Embedded Management

HPE iLO Advanced

HPE iLO Advanced Electronic License with 1yr Support on iLO Licensed Features	E6U59ABE
HPE iLO Advanced 1-server License with 1yr Support on iLO Licensed Features	512485-B21
HPE iLO Advanced Flexible Quantity License with 1yr Support on iLO Licensed Features	512486-B21
HPE iLO Advanced AKA Tracking License with 1yr Support on iLO Licensed Features	512487-B21
HPE iLO Advanced Electronic License with 3yr Support on iLO Licensed Features	E6U64ABE
HPE iLO Advanced Flexible Quantity License with 3yr Support on iLO Licensed Features	BD506A
HPE iLO Advanced AKA Tracking License with 3yr Support on iLO Licensed Features	BD507A

Notes: Licenses ship without media.

Converged Infrastructure Management

HPE OneView including 3yr 24x7 Support Physical 1-server LTU	E5Y34A
HPE OneView for ProLiant DL Server including 3yr 24x7 Support FIO Bundle Physical 1-server LTU	E5Y43A

Security Hardware

Trusted Platform Module

HPE Trusted Platform Module 2.0 Gen10 Plus Black Rivets Kit	P13771-B21
HPE Gen10 Plus TPM WR Module Kit	P17413-B21

Transceivers

HPE BladeSystem c-Class Virtual Connect 1G SFP SX Transceiver	453151-B21
HPE BladeSystem c-Class 10Gb SFP+ SR Transceiver	455883-B21
HPE 25Gb SFP28 SR 100m Transceiver	845398-B21
HPE 100Gb QSFP28 MPO SR4 100m Transceiver	845966-B21

Notes: Transceivers only available on the HPE ProLiant XL675d.

Management Hardware

HPE Apollo Platform Manager Kit	741192-B21
HPE DL38X Gen10 Plus Rear Serial Cable Kit	P14606-B21
HPE s6500 Chassis Handles Kit	608477-B21
HPE Apollo 6500 Gen10 Plus Rail Kit	P50026-B21

HPE Rack Options

To learn more information on additional rack options and specifications, please visit the following links

- **HPE Advanced Series Racks QuickSpecs**
- **HPE Enterprise Series Racks QuickSpecs**
- **HPE Standard Series Racks Quickspecs**
- **HPE KVM Switches web page**

HPE Power Distribution Units (PDUs)

To learn more information on these products and their specifications, please visit the following links

- **HPE Basic Power Distribution Units (PDU) QuickSpecs**
- **HPE Metered Power Distribution Units (PDU) QuickSpecs**
- **HPE Intelligent Power Distribution Unit (PDU) QuickSpecs**
- **HPE Metered and Switched Power Distribution Units (PDU) QuickSpecs**

Additional Options

HPE Uninterruptible Power Systems (UPS)

To learn more information on these products and their specifications, please visit the following links

- **HPE Uninterruptible Power Systems (UPS) web page**
- **Rackmount Power Distribution Units (PDU) QuickSpecs**
- **HPE DirectFlow Three Phase Uninterruptible Power System QuickSpecs**
- **HPE Line Interactive Single Phase UPS QuickSpecs**

Technical Specifications

System Unit Specifications		
All in HPE Apollo d6500 Gen10 Plus Chassis (P19674-B21)		
Dimensions	**Height**	265mm (10.43 in.)
	Depth	850mm (33.46 in.)
	Width	439mm (17.28 in.)
Boxed including single pallet	**Height**	1181mm (46.5 in.)
	Depth	700mm (27.5 in.)
	Width	600mm (23.6 in.)
Maximum System Weight	**XL675d:** 96.27 kg (212.24 lbs) **XL645d:** 98.4 kg (217.0 lbs)	
Input Requirements (per power supply)	**Rated Line Voltage** 200 to 277 VAC	
Power Supply Output (per power supply)	**Rated Steady-State Power**	
	For 3000W 12V Power Supply: • 2900W @ 200 VAC input • 3000W @ 208 VAC to 277 VAC input	
	For 3000W 54V Power Supply: • 3000W @ 200 VAC to 277 VAC input	
BTU Rating	**Maximum**	
	For 3000W 12V Power Supply: • 10,671 BTU/hr @ 200 VAC • 10,951 BTU/hr @ 277 VAC	
	For 3000W 54V Power Supply: • 10,918 BTU/hr @ 200 VAC • 10,820 BTU/hr @ 277 VAC	

System Inlet Temperature

Standard Operating Temperature

10° to 35°C (50° to 95°F) at sea level with an altitude derating of 1.0°C per every 305 m (1.8°F per every 1000 ft) above sea level to a maximum of 3050 m (10,000 ft), no direct sustained sunlight. Maximum rate of change is 20°C/hr (36°F/hr). The upper limit and rate of change may be limited by the type and number of options installed.

System performance during standard operating support may be reduced if operating with a fan fault or above 30°C (86°F).

Extended Ambient Operating Temperature

For approved hardware configurations, the supported system inlet range is extended to be: 5° to 10°C (41° to 50°F) and 35° to 40°C (95° to 104°F) at sea level with an altitude derating of 1.0°C per every 175 m (1.8°F per every 574 ft) above 900 m (2953 ft) to a maximum of 3050 m (10,000 ft).

For approved hardware configurations, the supported system inlet range is extended to be: 40° to 45°C (104° to 113°F) at sea level with an altitude derating of 1.0°C per every 125 m (1.8°F per every 410 ft) above 900 m (2953 ft) to a maximum of 3050 m (10,000 ft).

System performance may be reduced if operating in the extended ambient operating range or with a fan fault.

Non-operating

-30° to 60°C (-22° to 140°F). Maximum rate of change is 20°C/hr (36°F/hr).

Technical Specifications

Relative Humidity (non-condensing)

Operating
8% to 90% - Relative humidity (Rh), 28°C maximum wet bulb temperature, non-condensing.

Non-operating
5 to 95% relative humidity (Rh), 38.7°C (101.7°F) maximum wet bulb temperature, non-condensing..

Altitude

Operating
3050 m (10,000 ft). This value may be limited by the type and number of options installed. Maximum allowable altitude change rate is 457 m/min (1500 ft/min).

Non-operating
9144 m (30,000 ft). Maximum allowable altitude change rate is 457 m/min (1500 ft/min).

Acoustic Noise

Listed are the declared A-Weighted sound power levels (LWAd) and declared average bystander position A-Weighted sound pressure levels (LpAm) when the product is operating in a 23°C ambient environment. Noise emissions were measured in accordance with ISO 7779 (ECMA 74) and declared in accordance with ISO 9296 (ECMA 109). The listed sound levels apply to standard shipping configurations. Additional options may result in increased sound levels. Please have your HPE representative provide information from the HPE EMESC website for further technical details regarding the configurations listed below.

		Entry	Base	Perf
LpAm	**Idle**	32 dBA	34 dBA	44 dBA
	Operating	32 dBA	37 dBA	48 dBA
LWAd	**Idle**	5.0 B	5.2 B	5.7 B
	Operating	5.0 B	5.3 B	6.4 B

Notes:

- Acoustics levels presented here are generated by the test configuration only. Acoustics levels will vary depending on system configuration. Values are subject to change without notification and are for reference only.
- Product conformance to cited product specifications is based on sample (type) testing, evaluation, or assessment. This product or family of products is eligible to bear the appropriate compliance logos and statements.
- The Listed sound levels apply to standard shipping configurations. Additional options may result in increased sound levels.

Emissions Classification (EMC) – Regulatory Information

To view the regulatory information for your product, view the Safety and Compliance Information for Server, Storage, Power, Networking, and Rack Products, available at the Hewlett Packard Enterprise Support Center:
https://support.hpe.com/hpesc/public/docDisplay?docLocale=en_US&docId=c03471072

Environment-friendly Products and Approach - End-of-life Management and Recycling

Hewlett Packard Enterprise offers **end-of-life product return, trade-in, and recycling programs**, in many geographic areas, for our products. Products returned to Hewlett Packard Enterprise will be recycled, recovered or disposed of in a responsible manner. The EU WEEE directive (2002/95/EC) requires manufacturers to provide treatment information for each product type for use by treatment facilities. This information (product disassembly instructions) is posted on the Hewlett Packard Enterprise web site. These instructions may be used by recyclers and other WEEE treatment facilities as well as Hewlett Packard Enterprise OEM customers who integrate and re-sell Hewlett Packard Enterprise equipment.

Summary of Changes

Date	Version History	Action	Description of Change
03-Jun-2024	Version 24	Changed	Additional Options section was updated. Obsolete SKUs were removed
04-Mar-2024	Version 23	Changed	Configuration Information section was updated Obsolete SKUs were removed
04-Dec-2023	Version 22	Changed	Configuration Information section was updated Obsolete SKUs were removed
06-Nov-2023	Version 21	Changed	Configuration Information section was updated Obsolete SKUs were removed
05-Sep-2023	Version 20	Changed	Configuration Information section was updated Obsolete SKUs were removed
10-Jul-2023	Version 19	Changed	Standard Features section was updated.
20-Jun-2023	Version 18	Changed	Overview section was updated
03-Apr-2023	Version 17	Changed	Optional Features and Configuration Information sections were updated
06-Feb-2023	Version 16	Changed	Overview and Configuration Information sections were updated
05-Dec-2022	Version 15	Changed	Core Options section was updated
07-Nov-2022	Version 14	Changed	Configuration Information section was updated Obsolete SKUs were removed
01-Aug-2022	Version 13	Changed	Configuration Information section was updated
05-Jul-2022	Version 12	Changed	Configuration Information section was updated Obsolete SKUs were removed
16-May-2022	Version 11	Changed	Configuration Information section was updated Obsolete SKUs were removed
21-Mar-2022	Version 10	Changed	Standard Features and Configuration Information were removed.
07-Feb-2022	Version 9	Changed	Configuration Information section was updated
10-Jan-2022	Version 8	Changed	Additional Options section was updated. Obsolete SKUs were removed
01-Nov-2021	Version 7	Changed	Added Software Development Tools Overview, Standard features and Additional Options sections were updated. Obsolete SKUs were removed
07-Sep-2021	Version 6	Changed	Additional Options section was updated. Obsolete SKUs were removed
02-Aug-2021	Version 5	Changed	Obsolete SKUs were removed
04-May-2021	Version 4	Changed	Overview, Standard Features, Optional Features, Configuration Information and Additional Options were removed.
06-Apr-2021	Version 3	Changed	Standard Features, Configuration Information, Additional Options and Technical Specifications sections were updated.
01-Feb-2021	Version 2	Changed	Overview, Standard Features, Configuration Information, Additional Options and Technical Specifications sections were updated. Obsolete SKUs were removed
07-Dec-2020	Version 1	New	New QuickSpecs

Copyright

Make the right purchase decision.
Contact our presales specialists.

Chat now (sales)

Call now

Get updates

© Copyright 2024 Hewlett Packard Enterprise Development LP. The information contained herein is subject to change without notice. The only warranties for Hewlett Packard Enterprise products and services are set forth in the express warranty statements accompanying such products and services. Nothing herein should be construed as constituting an additional warranty. Hewlett Packard Enterprise shall not be liable for technical or editorial errors or omissions contained herein.

AMD™ and EPYC™ are registered trademarks of Advanced Micro Devices, Inc. in the U.S. and other countries. Microsoft®, Windows®, and Windows Server® are U.S. registered trademarks of the Microsoft group of companies.
For hard drives, 1GB = 1 billion bytes. Actual formatted capacity is less

a50002545enw - 16700 - Worldwide - V24 - 03-June-2024

Hewlett Packard Enterprise