Shape the Future of QuickSpecs - Your Input Matters

HPE ProLiant ML110 Gen11 QuickSpecs

Provides enhanced single-processor and storage flexibility in a 4.5U, 1P tower-optimized server with optional rackable chassis, outstanding compute performance, security, reliability, and expandability at an affordable price.

Supports a broad range of mid-tier workloads for small offices, remote and branch offices of large enterprises, growing SMBs, and data centers with the power of 4th and 5th Gen Intel® Xeon® Scalable Processors and increased bandwidth with DDR5 and PCIe Gen5. The HPE ProLiant ML110 Gen11 server is ideal for supporting business growth.

HPE ProLiant ML110 Gen11

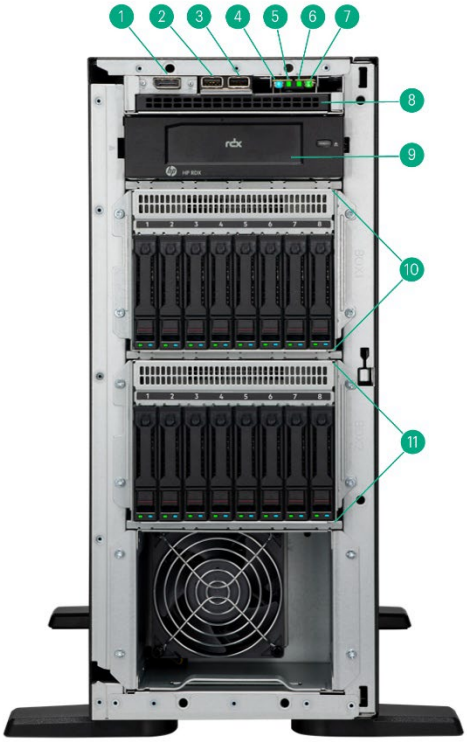

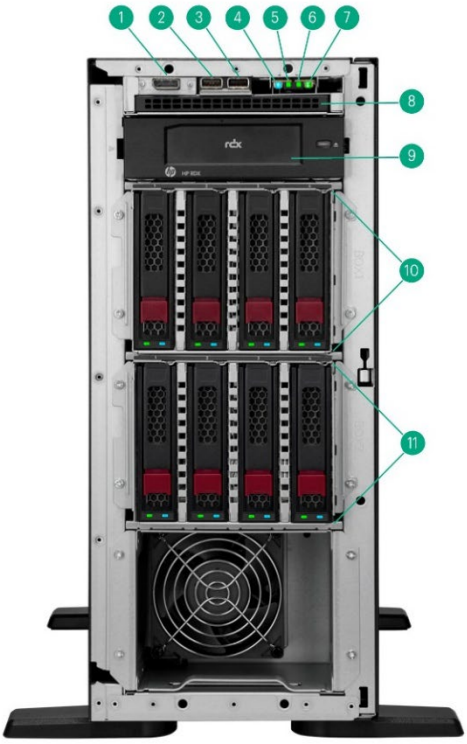

Front View – SFF chassis with optional Gen11 16 SFF and 8LFF Drive Cage Kits (Tower mode)

Item	Description	Item	Description
1.	DisplayPort 1.1a	7.	Power on/Standby button and system power LED
2.	USB 3.2 Gen 1 port	8.	Optical drive bay
3.	iLO service port	9.	Media Bay: optional internal LTO tape drive
4.	UID button/LED	10.	Box1: 4LFF/NHP or 8SFF SAS/SATA drive cage
5.	NIC status LED[1]	11.	Box2: Optional 4LFF/NHP or 8SFF SAS/SATA drive cage
6.	Health LED		

Notes:

– [1]Front NIC LED display doesn't support NIC LED ACT/LINK indication from ALOM/PCIE/FLOM NICs

– Image shown without the security front bezel which is standard in every ML110 Gen11 unit.

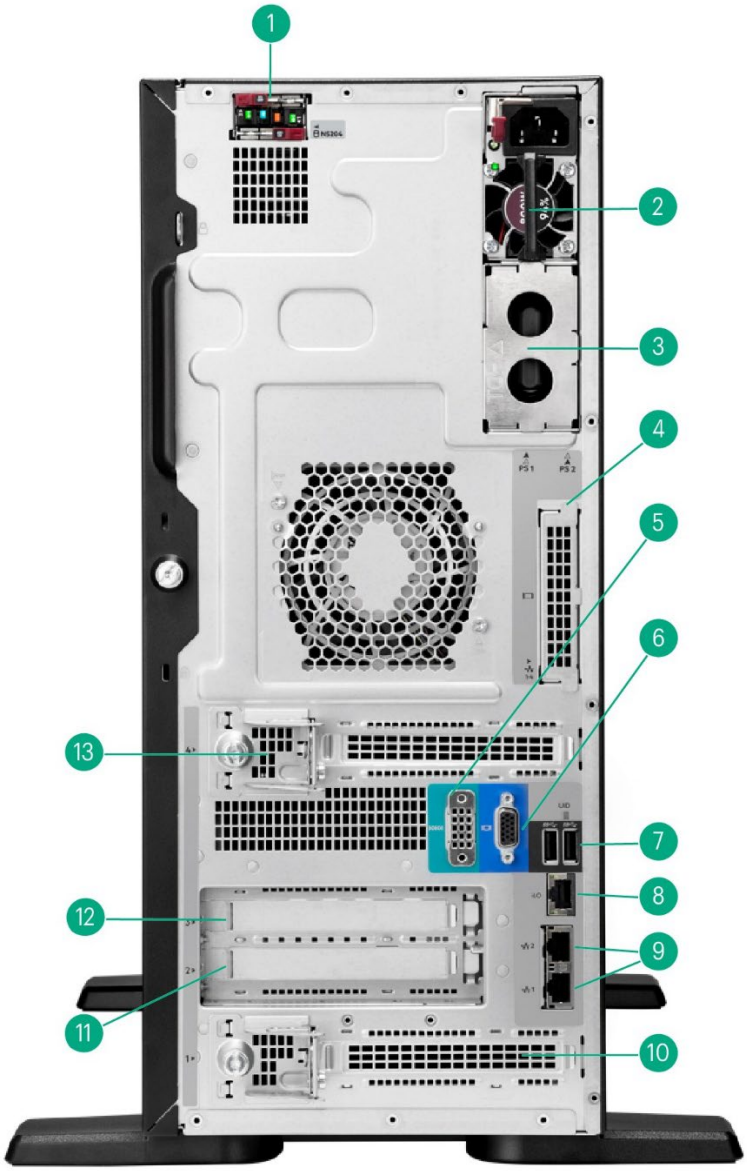

Rear View – With optional NS204i-u and riser kit shown.

Item	Description	Item	Description
1.	HPE NS204i-u Gen11 NVMe Hot Plug Boot Device (Optional)	8.	iLO management port
2.	Flexible Slot power supply 1	9.	Dual NIC ports (1 GbE)
3.	Flexible Slot power supply 2	10.	Slot 1 PCIe5 x16
4.	Slot 14 OCP 1 (Optional for OROC/NIC OCP adapter)	11.	Slot 2 PCIe5 x16 (Optional riser kit required)
5.	Serial port (Optional)	12.	Slot 3 PCIe5 x16 (Optional riser kit required)
6.	VGA Port	13.	Slot 4 PCIe5 x16
7.	Dual USB 3.2 Gen 1 ports		

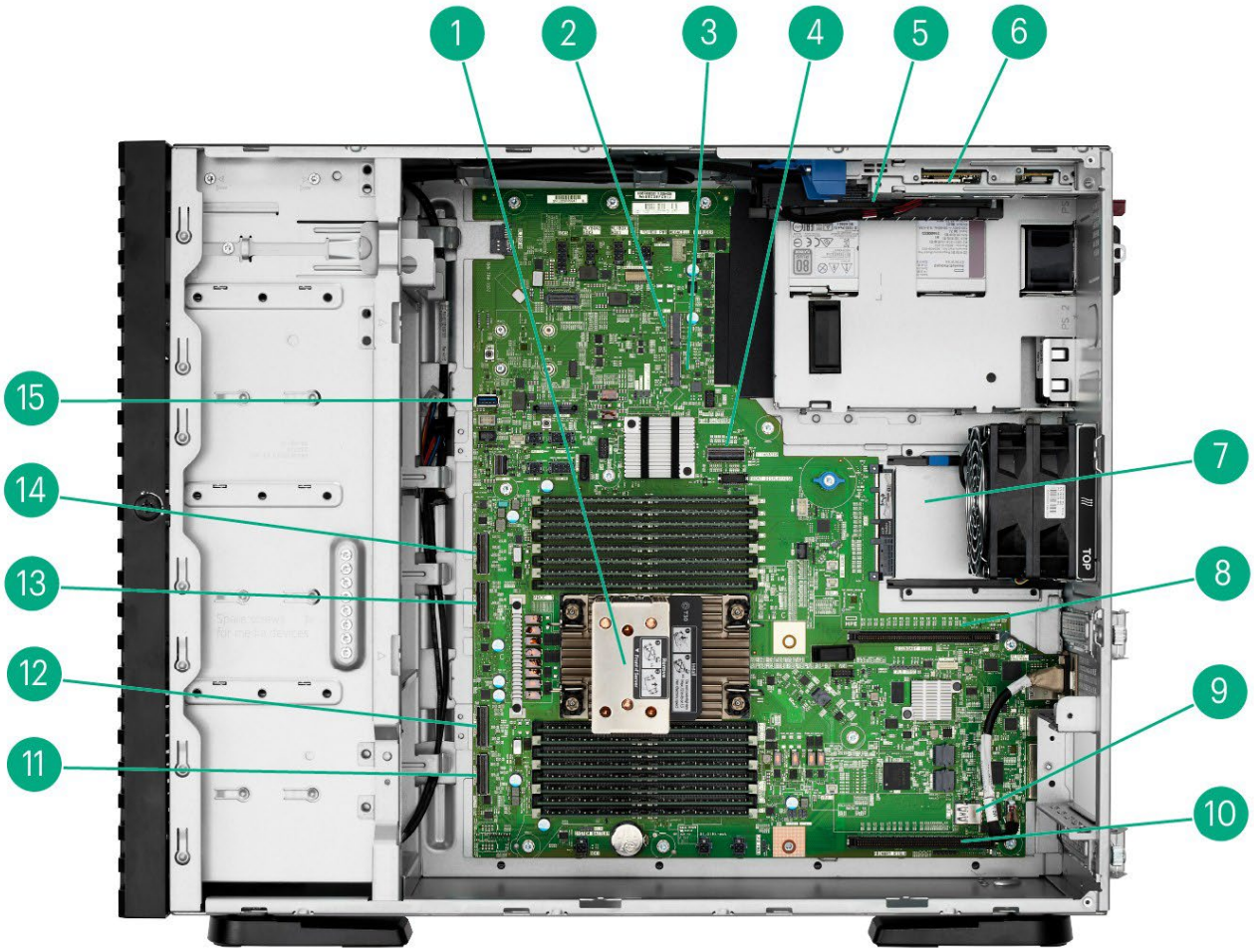

Internal View – with full memory DIMM populated, and optional NS204i-u shown

Item	Description	Item	Description
1.	CPU Socket with 16 DDR5 DIMM slots	9.	USB 2.0 port
2.	M.2 Slot 2	10.	Slot 1 PCIe5 x16
3.	M.2 Slot 1	11.	MCIO port 1 for the riser slot 2
4.	x8 SlimSAS port	12.	MCIO port 2 for the riser slot 2
5.	Megacell battery holder (Under)	13.	MCIO port 3 for the riser slot 3
6.	HPE NS204i-u NVMe Hot Plug Boot Device (Optional)	14.	MCIO port 4 for the riser slot 3
7.	Slot 14 OCP 1 (Optional for OROC/NIC)	15.	USB 3.2 Gen 1 port
8.	Slot 4 PCIe5 x16		

What's New

- Powered by 4th Generation Intel® Xeon® Scalable processors that support up to 32 core at 185 W, 60 MB of L3 Cache, and 16 DIMMs for DDR5 memory up to 4800 MT/s.
- Increased memory bandwidth, performance and lower power requirements with DDR5 memory that supports up to 1 TB memory capacity with 8 channels per processor.
- Advanced data transfer rates from the PCIe Gen5 serial expansion bus.
- Includes HPE Integrated Lights-Out 6 (iLO 6) server management software that enables you to securely configure, monitor, and update your HPE ProLiant Gen11 servers seamlessly from anywhere.
- Supported LFF/SFF backplane and hot-pluggable RAID1 protected NS204i-u M.2 NVMe boot option.
- Supported NVIDIA L4 24 GB PCIe Accelerator
- Supported 5th Generation Intel® Xeon® Scalable processors that support up to 28 cores at 185 W TDP, 2.1 GHz.
- Supported DDR5 5600 MT/s memory 16, 32, 64, 96GB DIMM modules with 5th Gen Intel® Xeon® Scalable processors.
- New pre-configured SKUs with 5th Generation Intel® Xeon® Scalable processors.
- Supported NVIDIA RTX 4000 Ada Graphics Accelerator.
- Supported HPE 26TB SAS/SATA 7.2K LFF LP HDDs.
- Supported internal LTO tape drive.

Platform Information

Form Factor

- 4.5U tower with rack conversion capability

Notes: When deployed as a Rack model, this system will take up 5.5U-height space in a standard data center rack facility.

Chassis Types

- 8 SFF chassis with optional SFF drive cage kit, 1 Optical Drive, 1 internal LTO tape drive supported.
- 4 LFF chassis with optional LFF or SFF drive cage kit, 1 Optical Drive, 1internal LTO tape drive supported.

Notes: Mixed SFF and LFF drive cages is supported with LFF chassis, up to 2 drive cages.

System Fans

- Standard – 2 fans included with optional Redundant Fan Kit.

Notes:

When one of the following scenarios occurs, Redundant Fan Kit (P49984-B21) is required.

- Server with the following options installed:
  - SAS 10K RPM SFF HDD
  - SAS 15K RPM SFF HDD
  - SAS4 SFF SSD
  - HPE NS204i-u Gen11 NVMe Hot Plug Boot Optimized Storage Device
  - GPU and accelerators
- The server must continue operating in the event of a single fan failure. A flashing amber Health LED will indicate this condition.
- Server is required to operate with the A3/A4 extended operating environment with ambient temperature 35 °C (95 °F) to 45°C (113 °F).

Processors – One of the following, depending on model.

Notes: For more information regarding Intel® Xeon® processors, refer to the following https://www.intel.sg/content/www/xa/en/processors/xeon/scalable/xeon-scalable-platform.html.

Intel® Xeon® Scalable Processors – Naming Decoder		
Processor Suffix	**Description**	**Offering**
P	Cloud – IaaS	Processor specifications optimized for IaaS cloud environments such as orchestration efficiency in high-frequency VM environments.
V	Cloud – SaaS	Processors specifications optimized for SaaS cloud environments.
M	Media Transcode	Processors specifications optimized for AI and media processing workloads.
H	DB and Analytics	Database and Analytics up to 4S and 8S depending on SKU
N	Network/5G/Edge (High TPT/Low Latency)	Network/5G/Edge (High TPT /Low Latency) Processor specifications optimized for communications/networking/NFV (Network Function(s) Virtualization) workloads and operating environments.
S	Storage & HCI	Storage-optimized SKU with full accelerators enabled (DSA, QAT, DLB)
T	Long-life Use/High Tcase	Support for up to 10-year reliability and support for higher Tcase. These SKUs are often used in operating environments with long-life use requirements and require Network Equipment Building System (NEBS)–Thermal friendly specification support.
U	1-Socket Optimized*	Supported in one-socket configurations only.
Q	Liquid cooling	Lower Tcase SKUs, targeted towards liquid cooling
+	Feature +	Feature plus (+) SKU contains 1 of each accelerator enabled (DSA, DLB, QAT, IAA)

Intel Fourth Generation Xeon® Scalable Processors							
Intel® Xeon® Models	**CPU Frequency**	**Cores**	**L3 Cache**	**Power**	**UPI (16 GT/s)**	**DDR5**	**SGX Enclave size**
Gold Processors							
Gold 6421N Processor*	1.8 GHz	32	60 MB	185 W	N/A	4400 MT/s	128 GB
Gold 6426Y Processor	2.5 GHz	16	37.5 MB	185 W	3	4800 MT/s	128 GB
Gold 5418Y Processor	2.0 GHz	24	45 MB	185 W	3	4400 MT/s	128 GB
Gold 5412U Processor*	2.1 GHz	24	45 MB	185 W	N/A	4400 MT/s	128 GB
Gold 5411N Processor*	1.9 GHz	24	45 MB	165 W	N/A	4400 MT/s	128 GB
Gold 5418N Processor	1.8 GHz	24	45 MB	165 W	3	4000 MT/s	128 GB
Gold 5415+ Processor	2.9 GHz	8	22.5 MB	150 W	3	4400 MT/s	128 GB
Gold 5416S Processor	2.0 GHz	16	30 MB	150 W	3	4400 MT/s	128 GB
Silver Processors							
Silver 4416+ Processor	2.0 GHz	20	37.5 MB	165 W	2	4000 MT/s	64 GB
Silver 4410Y Processor	2.0 GHz	12	30 MB	150 W	2	4000 MT/s	64 GB
Bronze Processor							
Bronze 3408U Processor*	1.8 GHz	8	22.5 MB	125 W	N/A	4000 MT/s	64 GB

Intel® Fifth Generation Xeon® Scalable Processors							
Intel® Xeon® Models	**CPU Frequency**	**Cores**	**L3 Cache**	**Power**	**UPI (16 GT/s)**	**DDR5**	**SGX Enclave size**
Gold Processors							
Gold 5512U Processor*	2.1 GHz	28	52.5 MB	185 W	N/A	4800 MT/s	128 GB
Gold 5515+ Processor	3.2 GHz	8	22.5 MB	165 W	3	4800 MT/s	128 GB
Silver Processors							
Silver 4516Y+ Processor	2.2 GHz	24	45 MB	185 W	2	4400 MT/s	64 GB
Silver 4514Y Processor	2.0 GHz	16	30 MB	150 W	2	4400 MT/s	64 GB
Silver 4510 Processor	2.4 GHz	12	30 MB	150 W	2	4400 MT/s	64 GB
Silver 4509Y Processor	2.6 GHz	8	22.5 MB	125 W	2	4400 MT/s	64 GB
Bronze Processor							
Bronze 3508U Processor*	2.1 GHz	8	22.5 MB	125 W	N/A	4400 MT/s	64 GB

Chipset

Intel® C741 Chipset

Notes: For more information regarding Intel® chipsets, refer to the following URL:
https://www.intel.com/content/www/us/en/products/chipsets/server-chipsets.html

System Management Chipset

HPE iLO 6 ASIC

Notes: Read and learn more in the iLO QuickSpecs.

One of the following depending on model

Memory (one of the following depending on the model)	
Type	HPE DDR5 Smart Memory, Registered (RDIMM)
DIMM Slots Available	16 DIMM slots 16 DIMM slots per processor, 8 channels per processor, 2 DIMM per channel
Maximum capacity (RDIMM)	1.5 TB 16 x 96 GB RDIMM @ 4400MT/s at 2DPC with 5th Gen Intel® Processors and DDR5 5600 DIMMs 1.0 TB 16 x 64 GB RDIMM @ 4400MT/s at 2DPC with 4th Gen Intel® Processors and DDR5 4800 DIMMs

Notes:

- Actual maximum memory speed is a function of the memory type, memory configuration, and processor model.
- 96GB DDR5-5600 DIMM is not supported with 4510, 4509Y and 3508U processors.
- For additional information, refer to the HPE DDR5 Smart Memory QuickSpecs.
- For General Server Memory and Persistent Memory Population Rules and Guidelines for Gen11 see details here: http://www.hpe.com/docs/memory-population-rules

Memory Protection

Advanced ECC

Advanced ECC uses single device data correction to detect and correct single and multi-bit errors that occur within a single DRAM chip.

Expansion Slots

Default Slots

Notes:

- Bus width indicates the number of physical electrical lanes running to the connector.
- There are two PCIe Gen5 x16 slots available by default:

Default Slots					
Slots #	**Processor**	**Technology**	**Bus Width**	**Connector Width**	**Slot Form Factor**
1	CPU 1	PCIe 5.0	X16	X16	Full-height, full-length slot
4	CPU 1	PCIe 5.0	X16	X16	Full-height, half-length slot

Optional GPU Riser Kit

Notes:

- Bus width indicates the number of physical electrical lanes running to the connector.
- Double Width expansion card is only supported with slot 2 and results slot 3 space been occupied.
- Two GPU Riser Kit types:
  - HPE ProLiant ML110 Gen11 GPU Riser Kit (P53487-B21) provides Slot 2 as PCIe Gen5 x16 slot included riser cage, PCA and cables.
  - HPE ProLiant ML110 Gen11 Second GPU Riser Kit (P53488-B21) provides Slot 3 as PCIe Gen5 x16 slot included PCA and cables only, Thus HPE ProLiant ML110 Gen11 GPU Riser Kit (P53487-B21) is required while Second GPU riser kit selected.

HPE ProLiant ML110 Gen11 GPU Riser Kit					
Slots #	**Processor**	**Technology**	**Bus Width**	**Connector Width**	**Slot Form Factor**
2	CPU 1	PCIe 5.0	X16	X16	Full-height, full-length slot
3	CPU 1	PCIe 5.0	X16	X16	Full-height, full-length slot

Internal Storage Devices

- **Optical Drive**
  Available as an option (DVD-ROM or DVD-RW)
- **Hard Disk Drive/ Solid State Drive**
  Available as an option

Storage Controllers

NVMe Boot Devices

- HPE NS204i-u Gen11 NVMe Hot Plug Boot Optimized Storage Device

Hybrid RAID

Notes:

- Additional steps are required for OS installation with Intel® VROC, including the installation of VROC drivers before OS installation.
- Obtain Intel® VROC SATA RAID drivers and NVMe RAID drivers, specific for your system OS from Intel Virtual RAID on CPU for HPE User Guide - Installing Intel VROC (SATA RAID) on HPE server or Intel Virtual RAID on CPU for HPE User Guide - Installing Intel VROC (NVMe RAID) on HPE server.
  For OS installation with Intel® VROC, please refer to the link Intel Virtual RAID on CPU for HPE Gen11 User Guide - Installing OS on the Intel VROC RAID.
  - Intel® VROC SATA for HPE ProLiant Gen11

    Notes:

    - All models feature embedded storage controllers that supports SATA RAID with up to 4+4 LFF or 8 SFF drive and 2xM.2 SATA drives. Each LFF drive cage is separated drive groups, SFF drive cage also separates into two drive groups (Bay1-4 and Bay5-8) and 2x M.2 SATA drives from onboard slots.
    - When NS204i-u is selected, embedded storage controller port will be occupied and no LFF/SFF bay is supported.
    - Intel® VROC for HPE ProLiant Gen11 is an enterprise, Hybrid RAID solution specifically designed for SSDs.
    - Intel® VROC is a software-based solution utilizing Intel® CPU to RAID or HBA direct connected drives.
    - RAID Support- 0/1/5/10.
    - Windows and Linux OS support.
    - Host Tools- Windows GUI/CLI, Linux CLI.
    - UEFI Support- HII Utility, OBSE.
    - iLO Support- IML, Alert, SNMP, AHS.
    - iLO Redfish- Redfish Read.
    - Intel® VROC SATA for HPE ProLiant Gen11 will operate in UEFI mode only. For legacy support an additional storage controller will be needed.
    - Intel® VROC SATA is off by default and must be enabled.
  - Intel® VROC NVMe for HPE ProLiant Gen11

    Notes:

    - All models feature two M.2 slots for NVMe connectivity, provides support for up to two M.2 NVMe drives with onboard slots.

- Intel® VROC for HPE ProLiant Gen11 is an enterprise, Hybrid RAID solution specifically designed for NVMe SSDs connected directly to the CPU. Intel® VROC is a software-based solution utilizing Intel® CPU to RAID or HBA direct connected drives.
- Intel® Virtual RAID on CPU RAID 1 (S3Q39AAE/S3Q19A) must be ordered to enable RAID support.
- Windows, Linux, VMware OS support.
- Host Tools- Windows GUI/CLI, Linux CLI.
- UEFI Support- HII Utility, OBSE.
- Active health monitoring of NVMe M.2 drives requires use of SMART tools.
- Intel® VROC NVMe for HPE ProLiant Gen11 will operate in UEFI mode only. For legacy support an additional Tri-
  Mode controller will be needed.
- For NVMe SSDs only, there is no PCIe card support.
- ML110 Gen11 supports up to 2x M.2 NVMe drives on onboard slots with Intel® Virtual RAID on CPU RAID 1 (S3Q39AAE/S3Q19A).
- Intel® VROC NVMe feature is not supported with 4510, 4509Y and 3508U processors.
- Intel® VROC NVMe feature is not supported with M.2 NVMe 2280 V2/M.2 2280 SED drives.

Essential RAID Controllers

- HPE Smart Array E208e-p SR Gen10 Controller

Tri-mode RAID Controllers

- HPE MR216i-o Gen11 x16 Lanes without Cache OCP SPDM Storage Controller
- HPE MR216i-p Gen11 x16 Lanes without Cache OCP SPDM Storage Controller
- HPE MR408i-o Gen11 x8 Lanes 4GB Cache OCP SPDM Storage Controller
- HPE MR408i-p Gen11 x8 Lanes 4GB Cache PCI SPDM Plug-in Storage Controller
- HPE MR416i-o Gen11 x16 Lanes 8GB Cache OCP SPDM Storage Controller

Maximum Storage

Drive	Capacity	Configuration
Hot Plug LFF SAS HDD	208 TB	8 x26 TB
Hot Plug LFF SAS SSD	7.68 TB	8 x960 GB
Hot Plug LFF SATA HDD	208 TB	8 x26 TB
Hot Plug LFF SATA SSD	7.68 TB	8 x960 GB
Hot Plug SFF SAS HDD	38.4 TB	16 x2.4 TB
Hot Plug SFF SAS SSD	245.76 TB	16 x15.36 TB
Hot Plug SFF SATA SSD	122.88 TB	16 x7.68 TB
Hot Plug NVMe M.2 SSD	480 GB	2 x480 GB (NS204i-u boot option with RAID1 protected)
SATA/NVMe M.2 SSD (Onboard slot)	960 GB/3.84 TB	2 x480 GB/2 x1.92 TB

Graphics

Integrated Video Standard

- Video modes up to 1920 x 1200@60Hz (32 bpp)
- 16MB Video Memory

HPE iLO 6 on system management memory

- 64 MB Flash
- 8 Gbit DDR 4 with ECC protection

Power Supply

- HPE 500W Flex Slot Platinum Hot Plug Low Halogen Power Supply Kit
  Notes: Available in 94% Power Efficiency
- HPE 800W Flex Slot Platinum Hot Plug Low Halogen Power Supply Kit
  Notes: Available in 94% Power Efficiency
- HPE 1000W Flex Slot Titanium Hot Plug Low Halogen Power Supply Kit
  Notes: Available in 96% Power Efficiency
- HPE 1600W Flex Slot Platinum Hot Plug Low Halogen Power Supply Kit
  Notes:
  - Available in 94% Power Efficiency.
  - 200-240VAC power input only.

HPE Flexible Slot (Flex Slot) Power Supplies share a common electrical and physical design that allows for hot plug, tool-less installation into HPE ProLiant Gen11 Performance Servers. Flex Slot power supplies are certified for high-efficiency operation and offer multiple power output options, allowing users to "right-size" a power supply for specific server configurations. This flexibility helps to reduce power waste, lower overall energy costs, and avoid "trapped" power capacity in the data center.

All pre-configured servers ship with regional specific power cord with tower server. If a different power cord is required, please check the ProLiant Power Cables web page.

To review the power requirements for your selected system, please use the HPE Power Advisor Tool.

For information on power specifications and technical content visit HPE Server power supplies

---

Interfaces	
Serial	Optional, rear
DisplayPort	1 standard, front
VGA Port	1 VGA Port standard, rear
Network Ports	2 1GbE BCM5720 embedded NIC. Choice of OCP or stand-up card
HPE iLO Remote Management Network Port	1 GbE Dedicated, rear
Front iLO Service Port	1 standard, front
USB 3.2 Gen1	4 standard on all models: 1 front, 2 rear, 1 internal
USB 2.0	1 internal

Operating Systems and Virtualization Software Support for HPE Servers

HPE servers are designed for seamless integration with partner Operating Systems and Virtualization Software. By collaborating closely with our partners, we ensure that their products are optimized, certified, and fully supported within your HPE server environment.

Access the certified and supported servers for each of the OS and Virtualization software: HPE Servers Support & Certification Matrices

UEFI enables numerous new capabilities specific to HPE ProLiant servers such as

- Secure Boot and Secure Start enabled for enhanced security.
- Operating system specific functionality
- Support for > 2.2 TB (using GPT) boot drives.
- USB 3.2 Gen1 Stack
- Embedded UEFI Shell
- Mass Configuration Deployment Tool using iLO RESTful API that is Redfish API Conformant
- PXE boot support for IPv4 IPv6 networks
- Workload Profiles for simple performance optimization

UEFI Boot Mode only

- TPM 2.0 Support
- NVMe Boot Support
- iSCSI Software Initiator Support.
- HTTP/HTTPs Boot support as a PXE alternative.
- Boot support for option cards that only support a UEFI option ROM.

Notes: For UEFI Boot Mode, boot environment and OS image installations should be configured properly to support UEFI.

Industry Standard Compliance

- ACPI 6.4 Compliant
- PCIe 5.0 Compliant
- WOL Support
- Microsoft® Logo certifications
- Support for Microsoft Secure Code
- PXE Support
- VGA/DisplayPort
- USB 3.2 Gen1 Compliant
- USB 2.0 Compliant
- OCP 3.0 SFF NIC Support
- OCP 3.0 SFF Storage Support
- Embedded TPM Support
- ENERGY STAR®
- SMBIOS 3.4
- UEFI 2.7
- UEFI Class 3 (Unified Extensible Firmware Interface Forum)
- Redfish API
- IPMI 2.0
- Advanced Encryption Standard (AES)
- Triple Data Encryption Standard (3DES)
- SNMP v3
- TLS 1.2
- DMTF Systems Management Architecture for Server Hardware Command Line Protocol (SMASH CLP)
- DMTF Redfish support for SecureBoot Key Management
- ACPI DSM Drive LED Management
- Memory Page Retire Support
- Retire old VMware Secure Boot Key
- MCTP
- I3C Engine
- APML
- Active Directory v1.0
- ASHRAE A3/A4

  Notes: For additional technical, thermal details regarding ambient temperature, humidity, and feature support, please visit: https://www.hpe.com/support/ASHRAEGen11

Embedded Management

HPE Integrated Lights-Out (HPE iLO)

Monitor your servers for ongoing management, service alerting, reporting and remote management with HPE iLO. Learn more at http://www.hpe.com/info/ilo.

UEFI

Configure and boot your servers securely with industry standard Unified Extensible Firmware Interface (UEFI). Learn more at http://www.hpe.com/servers/uefi

---

Intelligent Provisioning

Hassle free server and OS provisioning for 1 or more servers with Intelligent Provisioning.
Learn more at Intelligent Provisioning.

iLO RESTful API

iLO RESTful API is Redfish API conformance and offers simplified server management automation such as configuration and maintenance tasks based on modern industry standards. Learn more at http://www.hpe.com/info/restfulapi

HPE Compute Ops Management

Transform compute lifecycle management with a cloud experience that delivers greater simplicity, agility, and speed across your entire server environment, wherever it lives. This software-as-a-service tool provides a dashboard with global visibility and intuitive management of server health, security and compliance status to help you easily identify areas that need immediate attention. Users can update tens to thousands of servers faster through intelligent delta-based firmware downloads and on-demand HPE iLO firmware updates.

HPE Compute Ops Management is cloud-native software that is continually updated with new services, features, patches, and firmware packs. The management application resides in GreenLake cloud (access via https://common.cloud.hpe.com) and leverages the GreenLake architecture, security, and unified operations.
For a complete list of software as-a-service subscription SKUs and more information, visit the HPE Compute Ops Management QuickSpecs: https://www.hpe.com/psnow/doc/a50004263enw
For information on supported HPE servers, the complete list can be found here:
https://www.hpe.com/info/com-supported-servers

Server Utilities

Active Health System

The HPE Active Health System (AHS) is an essential component of the iLO management portfolio that provides continuous, proactive health monitoring of HPE servers. Learn more at http://www.hpe.com/servers/ahs

Active Health System Viewer

The Active System Health Viewer (AHSV) was deprecated as of March 2022. Users are now recommended to use the InfoSight (https://www.hpe.com/us/en/solutions/infosight.html) for Servers Portal for AHS viewing capabilities. In InfoSight for Servers portal, users will also be able to view hardware configuration details, firmware and driver information, warranty and support status of a server, wellness alerts, and create support cases for servers under a valid warranty or support contract.

HPE InfoSight provides the same security assurances as AHSV does. Furthermore, InfoSight can be used as an AHSV replacement even if customers do not want to share AHSV logs and telemetry data on an ongoing basis.

Notes: HPE InfoSight has been in EOS since November 1, 2024.

Smart Update

Keep your servers up to date with the HPE Smart Update solution by using Smart Update Manager (SUM) to optimize the firmware and driver updates of the Service Pack for ProLiant (SPP).

Learn more at https://www.hpe.com/us/en/servers/smart-update.html

iLO Amplifier Pack

Designed for large enterprise and service provider environments with hundreds of HPE servers, the iLO Amplifier Pack is a free, downloadable open virtual application (OVA) that delivers the power to discover, inventory and update Gen8, Gen9, Gen10 and Gen11 HPE servers at unmatched speed and scale. Use with an iLO Advanced License to unlock full capabilities.

Learn more at http://www.hpe.com/servers/iLOamplifierpack

Notes: HPE iLO Amplifier Pack has been in EOS since November 1, 2024.

RESTful Interface Tool

RESTful Interface tool (iLOREST) is a single scripting tool to provision using iLO RESTful API to discover and deploy servers at scale. Learn more at http://www.hpe.com/info/resttool

Scripting Tools

Provision one to many servers using your own scripts to discover and deploy with Scripting Tool (STK) for Windows and Linux or Scripting Tools for Windows PowerShell. Learn more at http://www.hpe.com/servers/powershell

HPE OneView Standard

HPE OneView is an on premises, multi-generational server monitoring and management solution. HPE OneView Standard can be used for inventory, health monitoring, alerting, and reporting without additional fees. Customers can upgrade their management experience with an HPE OneView Advanced license, all provided by the same tool. Learn more at http://www.hpe.com/info/oneview.

Security

- UEFI Secure Boot and Secure Start support.
- Immutable Silicon Root of Trust
- FIPS 140-3 validation (iLO 6 certification in progress)
- Common Criteria certification (iLO 6 certification in progress)
- Configurable for PCI DSS compliance
- Advanced Encryption Standard (AES) and Triple Data Encryption Standard (3DES) on browser
- Support for Commercial National Security Algorithms (CNSA)
- Tamper-free updates – components digitally signed and verified.
- Secure Recovery – recover critical firmware to known good state on detection of compromised firmware.
- Ability to rollback firmware
- Secure erase of NAND
- TPM (Trusted Platform Module) 2.0
- Front bezel key-lock feature – standard, available in both Tower and Rack models
- Padlock slot, standard.
- Kensington Lock slot, standard
- Chassis Intrusion detection option

Warranty

This product is covered by a global limited warranty and supported by HPE Services and a worldwide network of HPE Authorized Channel Partners. Hardware diagnostic support and repair is available for three years from date of purchase. Support for software and initial setup is available for 90 days from date of purchase. Enhancements to warranty services are available through HPE Services operational services or customized service agreements. Hard drives have either a one year or three-year warranty; refer to the specific hard drive QuickSpecs for details.

Notes: Server Warranty includes 3-Year Parts, 3-Year Labor, 3-Year Onsite support with next business day response. Warranty repairs may be completed by Customer Self Repair (CSR) parts. These parts fall into two categories: 1) Mandatory CSR parts are designed for easy replacement. A travel and labor charge will result when customers decline to replace a Mandatory CSR part; 2) Optional CSR parts are also designed for easy replacement but may involve added complexity. Customers may choose to have Hewlett Packard Enterprise replace Optional CSR parts at no charge. 3) Non-CSR parts must be serviced by a trained authorized service engineer. Additional information regarding worldwide limited warranty and technical support is available at: https://www.hpe.com/support/ProLiantServers-Warranties

---

Server Management

HPE iLO Advanced

HPE iLO Advanced licenses offer smart remote functionality without compromise, for all HPE ProLiant servers. The license includes the full integrated remote console, virtual keyboard, video, and mouse (KVM), multi-user collaboration, console record and replay, and GUI-based and scripted virtual media and virtual folders. You can also activate the enhanced security and power management functionality.

HPE OneView Advanced

HPE OneView brings a new level of automation to infrastructure management by taking a template driven approach to provisioning, updating, and integrating compute, storage, and networking infrastructure. It provides full-featured licenses which can be purchased for managing Gen8, Gen9, Gen10 and Gen11 servers. To learn more visit http://www.hpe.com/info/oneview.

Accelerator and GPGPU Information

Hewlett Packard Enterprise supports various accelerators on select HPE ProLiant servers to support different workloads. The accelerators enable seamless integration of GPU computing with HPE ProLiant servers for high-performance computing, large data center graphics, deep learning and virtual desktop deployments. These accelerators deliver all the standard benefits of GPU computing while enabling maximum reliability and tight integration with system monitoring and management tools such as HPE Insight Cluster Management Utility.

Rack and Power Infrastructure

The story may end with servers, but it starts with the foundation that makes compute go – and business grow. We've reinvented our entire portfolio of rack and power products to make IT infrastructure more secure, more practical, and more efficient. In other words, we've created a stronger, smarter, and simpler infrastructure to help you get the most out of your IT equipment. As an industry leader, Hewlett Packard Enterprise is uniquely positioned to address the key concerns of power, cooling, cable management and system access.

HPE G2 Advanced and Enterprise Racks are perfect for the server room or today's modern data center with enhanced airflow and thermal management, flexible cable management, and a 10-year Warranty to support higher density computing.

HPE G2 PDUs offer reliable power in flexible form factors that operate at temperatures up to 60°, include color-coded outlets and load segments and a low-profile design for optimal access to the rack and support for dense rack environments.
HPE Uninterruptible Power Systems are cost-effective power protection for any type workload. Some UPSs include options for remote management and extended runtime modules, so your critical dense data center is covered in power outages.

HPE KVM Solutions include a console and switches designed to work with your server and IT equipment reliably. We've got a cost-effective KVM switch for your first rack and multiple-connection IP switches with remote management and security capabilities to keep your data center rack up and running.

Learn more about HPE Racks, KVM, PDUs and UPSs at HPE Rack and Power Infrastructure.

One Config Simple (SCE)

SCE is a guided self-service tool to help sales and non-technical people provide customers with initial configurations in 3 to 5 minutes. You may then send the configuration on for configuration help, or use in your existing ordering processes. If you require "custom" rack configuration or configuration for products not available in SCE, please contact Hewlett Packard Enterprise Customer Business Center or an Authorized Partner for assistance.
https://h22174.www2.hpe.com/SimplifiedConfig/Welcome

HPE Services

No matter where you are in your digital transformation journey, you can count on HPE Services to deliver the expertise you need when, where, and how you need it. From planning to deployment, ongoing operations and beyond, our experts can help you realize your digital ambitions.
https://www.hpe.com/services

Consulting Services

No matter where you are on your journey to hybrid cloud, experts can help you map out your next steps. From determining what workloads should live where, to handling governance and compliance, to managing costs, our experts can help you optimize your operations.
https://www.hpe.com/services/consulting

HPE Managed Services

HPE runs your IT operations, providing services that monitor, operate, and optimize your infrastructure and applications, delivered consistently and globally to give you unified control and let you focus on innovation.
HPE Managed Services | HPE

Operational services

Optimize your entire IT environment and drive innovation. Manage day-to-day IT operational tasks while freeing up valuable time and resources. Meet service-level targets and business objectives with features designed to drive better business outcomes.
https://www.hpe.com/services/operational

HPE Complete Care Service

HPE Complete Care Service is a modular, IT environment service designed to help optimize your entire IT environment and achieve agreed upon IT outcomes and business goals through a personalized experience. All delivered by an assigned team of HPE Services experts. HPE Complete Care Service provides:

- A complete coverage approach
- An assigned HPE team
- Modular and fully personalized engagement
- Enhanced Incident Management experience with priority access
- Digitally enabled and AI driven customer experience

https://www.hpe.com/services/completecare

HPE Tech Care Service

HPE Tech Care Service is the operational support service experience for HPE products. The service goes beyond traditional support by providing access to product specific experts, an AI driven digital experience, and general technical guidance to not only reduce risk but constantly search for ways to do things better. HPE Tech Care Service delivers a customer-centric, AI driven, and digitally enabled customer experience to move your business forward. HPE Tech Care Service is available in three response levels. Basic, which provides 9x5 business hour availability and a 2-hour response time. Essential, which provides a 15-minute response time 24x7 for most enterprise level customers, and Critical, which includes a 6-hour repair commitment where available and outage management response for severity 1 incidents.
https://www.hpe.com/services/techcare

HPE Lifecycle Services

HPE Lifecycle Services provide a variety of options to help maintain your HPE systems and solutions at all stages of the product lifecycle. A few popular examples include:

- Lifecycle Install and Startup Services: Various levels for physical installation and power on, remote access setup, installation and startup, and enhanced installation services with the operating system.
- HPE Firmware Update Analysis Service: Recommendations for firmware revision levels for selected HPE products, considering the relevant revision dependencies within your IT environment.
- HPE Firmware Update Implementation Service: Implementation of firmware updates for selected HPE server, storage, and solution products, considering the relevant revision dependencies within your IT environment.
- Implementation assistance services: Highly trained technical service specialists to assist you with a variety of activities, ranging from design, implementation, and platform deployment to consolidation, migration, project management, and onsite technical forums.
- HPE Service Credits: Access to prepaid services for flexibility to choose from a variety of specialized service activities, including assessments, performance maintenance reviews, firmware management, professional services, and operational best practices.

Notes: To review the list of Lifecycle Services available for your product go to:
https://www.hpe.com/services/lifecycle

For a list of the most frequently purchased services using service credits, see the HPE Service Credits Menu

---

Other Related Services from HPE Services:

HPE Education Services

Training and certification designed for IT and business professionals across all industries. Broad catalogue of course offerings to expand skills and proficiencies in topics ranging from cloud and cybersecurity to AI and DevOps. Create learning paths to expand proficiency in a specific subject. Schedule training in a way that works best for your business with flexible continuous learning options.
https://www.hpe.com/services/training

Defective Media Retention

An option available with HPE Complete Care Service and HPE Tech Care Service and applies only to Disk or eligible SSD/Flash Drives replaced by HPE due to malfunction.

Consult your HPE Sales Representative or Authorized Channel Partner of choice for any additional questions and service options.

Parts and Materials

HPE will provide HPE-supported replacement parts and materials necessary to maintain the covered hardware product in operating condition, including parts and materials for available and recommended engineering improvements.

Parts and components that have reached their maximum supported lifetime and/or the maximum usage limitations as set forth in the manufacturer's operating manual, product QuickSpecs, or the technical product data sheet will not be provided, repaired, or replaced as part of these services.

How to Purchase Services

Services are sold by Hewlett Packard Enterprise and Hewlett Packard Enterprise Authorized Service Partners:

- Services for customers purchasing from HPE or an enterprise reseller are quoted using HPE order configuration tools.
- Customers purchasing from a commercial reseller can find services at https://ssc.hpe.com/portal/site/ssc/

AI Powered and Digitally Enabled Support Experience

Achieve faster time to resolution with access to product-specific resources and expertise through a digital and data driven customer experience.

Sign into the HPE Support Center experience, featuring streamlined self-serve case creation and management capabilities with inline knowledge recommendations. You will also find personalized task alerts and powerful troubleshooting support through an intelligent virtual agent with seamless transition when needed to a live support agent.
https://support.hpe.com/hpesc/public/home/signin

Consume IT On Your Terms

GreenLake is the cloud delivering a unified platform experience that allows enterprises to simplify IT, reduce costs, and transform faster.

- Get faster time to market
- Save on TCO, align costs to business
- Scale quickly, meet unpredictable demand
- Simplify IT operations across your data centers and clouds

To learn more about HPE Services, please contact your Hewlett Packard Enterprise sales representative or Hewlett Packard Enterprise Authorized Channel Partner. Contact information for a representative in your area can be found at "Contact HPE" https://www.hpe.com/us/en/contact-hpe.html

For more information: http://www.hpe.com/services

HPE Smart Choice Purchase Program

The HPE Smart Choice Purchase Program features popular fully configured products that can be quoted in minutes and shipped quickly through HPE Authorized Partners. Products are configured and tested in an HPE factory and stocked at HPE Authorized Distributors and Partners. The products arrive in a single box, making onsite integration easier and more efficient for partners and customers. Additionally, there are aggressively priced HPE Tech Care Services available only through the HPE Smart Choice program when you purchase an HPE Smart Choice product.

For HPE Smart Choice configuration and product details, please visit the Smart Choice Supplemental QuickSpecs: https://www.hpe.com/psnow/doc/a50009219enw

Pre-Configured models ship with the configurations below.

- Options can be selected from the Core or Additional options section of this QuickSpecs.
- Hewlett Packard Enterprise does not allow factory integration of options into pre-configured models. Any additional options purchased will not be shipped inside the server.
- Network Choice models do not include embedded LOM.

Base Models		
SKU Number	P55536-291	P70278-291
Model Name	HPE ProLiant ML110 Gen11 4410Y 2.0GHz 12-core 1P 32GB-R VROC 8SFF 800W RPS Server	HPE ProLiant ML110 Gen11 4510 2.4GHz 12-core 1P 32GB-R MR408i-o 8SFF 800W RPS JP Server
Chassis	HPE ProLiant ML110 Gen11 SFF Configure-to-order Server	
Processor	4410Y (12 core, 2.0 GHz, 150W)	4510 (12 core, 2.4 GHz, 150W)
Number of Processors	One	
Memory	32 GB (1x32 GB, 4800 MT/s) **Notes:** Runs at 4000 MT/s due to processor limitation.	32 GB (1x32 GB, 5600 MT/s) **Notes:** Runs at 4400 MT/s due to processor limitation.
Network Controller	Embedded 2-Port 1GbE BCM5720 networking ports	
Storage Controller	Embedded 8 SATA ports controller with Intel® VROC Hybrid RAID. **Notes:** Embedded controller can only support SATA drive, additional storage controller is required to support SAS drive.	HPE MR408i-o Gen11 x8 Lanes 4GB Cache OCP SPDM Storage Controller
Included Hard Drives	None ship standard, 8 SFF supported	
Optical Drive	Optional. None shipped as standard.	

Pre-configured Models

Expansion Slots	PCIe Gen5: 2 slots (x16), upgradable to 4 slots (x16); OCP3 with PCIe Gen5: 1 slot (x16)	
Power Supply	1x HPE 800W Flex Slot Platinum Hot Plug Low Halogen Power Supply Kit **Notes:** Additional Power Supply Kit (P38995-B21) provides 1+1 power redundancy feature.	**P70278-421:** 1x HPE 1000W Flex Slot Titanium Hot Plug Power Supply Kit **Notes:** Additional Power Supply Kit (P03178-B21) provides 1+1 power redundancy feature.
Fans	Default with 2 standard fans, non-hot-plug. Optional Redundant Fan Kit (P49984-B21) provides advanced cooling in heavier configurations and redundancy functionality. **Notes:** Configurations that require fan kits are provided in later sections.	
Management	HPE iLO Standard with Intelligent Provisioning (embedded), HPE OneView Standard (requires download); HPE iLO Advanced and HPE OneView Advanced (require licenses)	
Security	TPM (Trusted Platform Module)	
Form Factor	4.5U Tower. Optional Tower-to-Rack conversion kit (P47394-B21) to convert the unit to a 5.5U Rack-mount server.	
Warranty	Server warranty includes 3-year parts, 3-year labor, 3-year onsite support with next business day response.	

Pre-configured Models

Performance Models	
SKU Number	P55537-291 P55537-AA1
Model Name	HPE ProLiant ML110 Gen11 5416S 2.0GHz 16-core 1P 32GB-R VROC 8SFF 800W RPS Server
Chassis	HPE ProLiant ML110 Gen11 SFF Configure-to-order Server
Processor	5416S (16 core, 2.0 GHz, 150W)
Number of Processors	One
Memory	32 GB (1x32 GB, 4800 MT/s) **Notes:** Runs at 4400 MT/s due to processor limitation.
Network Controller	Embedded 2-Port 1GbE BCM5720 networking ports
Storage Controller	Embedded 8 SATA ports controller with Intel® VROC Hybrid RAID. **Notes:** Embedded controller can only support SATA drive, additional storage controller is required to support SAS drive.
Included Hard Drives	None ship standard, 8 SFF supported
Optical Drive	Optional. None ship standard.
Expansion Slots	PCIe Gen5: 2 slots (x16), upgradable to 4 slots (x16); OCP3 with PCIe Gen5: 1 slot (x16)
Power Supply	1x HPE 800W Flex Slot Platinum Hot Plug Low Halogen Power Supply Kit **Notes:** Additional Power Supply Kit (P38995-B21) provides 1+1 power redundancy feature.
Fans	Default with 2 standard fans, non-hot-plug. Optional Redundant Fan Kit (P49984-B21) provides advanced cooling in heavier configurations and redundancy functionality. **Notes:** Configurations that require fan kits are provided in later sections.
Management	HPE iLO Standard with Intelligent Provisioning (embedded), HPE OneView Standard (requires download); HPE iLO Advanced and HPE OneView Advanced (require licenses)
Security	TPM (Trusted Platform Module)
Form Factor	4.5U Tower. Optional Tower-to-Rack conversion kit (P47394-B21) to convert the unit to a 5.5U Rack-mount server.
Warranty	Server warranty includes 3-year parts, 3-year labor, 3-year onsite support with next business day response.

Smart Templates from HPE

HPE is releasing new Smart Template technology in the One Config Advanced (OCA) configurator. These Templates represent the CTO equivalents of the top-selling BTO configurations. They are intended to provide simple starting points to assist you in easily creating and customizing your desired Server solutions. HPE Servers that have Platform Templates, developed by HPE Product Managers, will have a separate tab in the HPE OCA configurator.

Workload Solutions Templates from HPE

The Workload Solutions Templates are built on the Smart Templates technology to easily develop working configurations of the most compelling Workload Solutions. The templates complement the Reference Builds developed by HPE. Workload Solutions templates preconfigure some of the key architecture decisions and make it easier for Sellers to get started and complete a differentiated server solution for your customer's specific workload.

Mainstream SKUs

HPE launched the Mainstream SKU initiative as a market-driven approach to Demand Steering. It is a simplified portfolio of our top selling options that meet the current and future market trends. HPE has committed to providing a more predictable and faster experience for these options. Mainstream SKUs enjoy higher safety stock levels and have higher fulfillment service levels than non-Mainstream SKUs. Mainstream orders are fulfilled +30% faster than non-Mainstream orders, have fewer shortages and better recovery dates. This platform has Mainstream SKUs in the options portfolio, and is eligible for the improved Mainstream experience. Mainstream SKUs are designated with a Mainstream symbol in our configurators.

Mainstream Configurations

HPE is using the new Smart Templates technology to present Mainstream configurations. All the options in a Mainstream configuration are pre-selected Mainstream SKUs to optimize the performance, predictability and fulfilment experience. Check the Template section in our configurators for eligible Mainstream configurations.

This section lists some of the steps required to configure a Factory Integrated Model. To ensure only valid configurations are ordered, Hewlett Packard Enterprise recommends the use of an HPE approved configurator. Contact your local sales representative for information on configurable product offerings and requirements.

- Factory Integrated Models must start with a CTO Server.
- FIO indicates that this option is only available as a factory integrable option.
- All Factory Integrated Models will be populated with sufficient hard drive blanks based on the number of initial hard drives ordered with the server.
- Some options may not be integrated at the factory. Contact your local sales representative for additional information.

European Union ErP Lot 9 2024 Regulation

Beginning on January 1st, 2024, units sold into the European Union (EU), European Economic Area (EEA), the United Kingdom, Ireland, Switzerland or Turkey, must include more efficient AC power supplies: 94% for multi-output and 96% for single-output. HPE Flexible Slot power supplies are single-output, and part numbers 865438-B21, P03178-B21, and P44712-B21 are 96% efficient, thus meeting requirements.

HPE is on target to fulfill compliant systems ahead of time and will begin enforcing these requirements in advance to satisfy requests with the current power supplies by the set deadline.

Step 1: Base Configuration (choose one of the following configurable models)

CTO Server	HPE ML110 Gen11 LFF NHP CTO Server	HPE ML110 Gen11 LFF CTO Server	HPE ML110 Gen11 SFF CTO Server
SKU Number	P51516-B21	P51517-B21	P51518-B21
Processor Sockets	1 Socket available		
Processor	Intel® Fourth or Fifth Generation Xeon® Scalable Processors		
DIMM Slots	16 DIMM slots available		
Storage Controller	Embedded 8 SATA ports controller with Intel® VROC Hybrid RAID Choice of HPE OCP-type RAID (OROC) and/or PCIe Standup controller card (s)		
PCIe	PCIe 5.0: 2 slots (x16), upgradable to 4 slots (x16) OCP 3.0 with PCIe Gen 5.0: 1 slot (x16)		
Drive Cage - included	4 LFF NHP SATA Drive Cage	4LFF SAS/SATA Drive Cage	8SFF SAS/SATA Drive Cage
Additional drive cages	Optional one 4 LFF NHP SATA Drive Cage kit **Notes:** Mixing different types of Drive Cage with NHP CTO server is not supported.	Optional one 4LFF or 8SFF** SAS/SATA Drive Cage.	Optional one 8SFF SAS/SATA Drive Cage kit
ODD	Optional, Up to 1		
Half-Height LTO	Optional, Up to 1 **Notes:** LTO Cable Kit (P62356-B21) is required.		
Megacell Battery	Optional		
Network Controller	Embedded 2-Port 1GbE BCM5720 networking ports. Choice of HPE OCP-type networking adapter and/or PCIe Standup controller card (s).		
Redundant Fan Kit*	2 fans as standard. Optional Redundant Fan Kit (P49984-B21) provides advanced cooling in heavier configurations and redundant functionality.		
Power Supply	HPE Flex Slot Hot Plug Power Supply Kit, up to 2		
Management	HPE iLO with Intelligent Provisioning (standard), iLO Advances and OneView (optional), HPE Compute Ops Management (subscription included)		
USB	5x USB 3.2 Gen1/2.0 ports, Plus front iLO Service Port		
Tower-to-Rack conversion kit	Optional. Tower to Rack kit is not factory integrable option and will be shipped with standalone package.		

Notes:

– * When one of the following scenarios occurs, Redundant Fan Kit (P49984-B21) is required, and system fans may operate at higher speed and higher acoustic levels to maintain optimum system cooling condition. Server with the following options installed:
  - SAS 10K RPM SFF HDD
  - SAS 15K RPM SFF HDD.
  - SAS4 SFF SSD.
  - HPE NS204i-u Gen11 NVMe Hot Plug Boot Optimized Storage Device.
  - GPU and accelerators

Server is required to continue operating with single fan failure. A flashing amber Health LED will indicate this condition.

Server is required to operate with the A3/A4 extended operating environment with ambient temperature 35 °C (95 °F) to 45 °C (113 °F).

- ** Mixed LFF and SFF Drive cages can be supported in one system. Please select the LFF CTO Server (P51517-B21) as the base configuration to start with.
- Certain configurations may trigger system fans to operate at higher speed and higher acoustic levels to maintain optimum system cooling. When deploying in acoustic sensitive environment reference Recommended Configurations for Acoustic Sensitive Environments section to avoid thermally challenging options.
- Refer to HPE Power Advisor Tool to review the power requirement for your selected configuration and determine what power supply module(s) to select.
- All CTO servers are ENERGY STAR® 3.0 compliant. After January 11, 2024, ENERGY STAR® 3.0 compliance is no longer valid. ENERGY STAR® 4.0 certification will be valid upon system configuration.

Step 2: Choose Required Options (only one of the following unless otherwise noted)

Step 2a: Choose Processors

Processor Option Kits – Intel® Fourth Generation Xeon® Scalable Processors

Notes:

- DDR5 memory speed is the maximum memory speed of the processor. Actual memory speed may depend on the quantity and type of DIMMs installed.
- 4800 MT/s maximum memory speed unless otherwise noted.
- 128GB SGX Enclave unless otherwise noted.

Intel® Xeon®-Gold Processors

Intel® Xeon®-Gold 6426Y 2.5GHz 16-core 185W Processor for HPE P49598-B21

Intel® Xeon®-Gold 6421N 1.8GHz 32-core 185W Processor for HPE P49641-B21

Notes: 4400 MT/s maximum memory speed.

Intel® Xeon®-Gold 5418Y 2.0GHz 24-core 185W Processor for HPE P49612-B21

Notes: 4400 MT/s maximum memory speed.

Intel® Xeon®-Gold 5416S 2.0GHz 16-core 150W Processor for HPE P49653-B21

Notes: 4000 MT/s maximum memory speed.

Intel® Xeon®-Gold 5411N 1.9GHz 24-core 165W Processor for HPE P49639-B21

Notes: 4400 MT/s maximum memory speed.

Intel® Xeon®-Gold 5415+ 2.9GHz 8-core 150W Processor for HPE P49597-B21

Notes: 4400 MT/s maximum memory speed.

Intel® Xeon®-Silver Processors

Intel® Xeon®-Silver 4416+ 2.0GHz 20-core 165W Processor for HPE P49611-B21

Notes:

- 4000 MT/s maximum memory speed.
- 64GB SGX Enclave.

Intel® Xeon®-Silver 4410Y 2.0GHz 12-core 150W Processor for HPE P49610-B21

Notes:

- 4000 MT/s maximum memory speed.
- 64GB SGX Enclave.

Processor Option Kits – Intel® Fourth Generation Xeon® Scalable Processors

Notes:

- DDR5 memory speed is the maximum memory speed of the processor. Actual memory speed may depend on the quantity and type of DIMMs installed.
- 4800 MT/s maximum memory speed unless otherwise noted.
- 128GB SGX Enclave unless otherwise noted.

Intel® Xeon®-Gold Processors

Intel® Xeon®-Gold 5512U 2.1GHz 28-core 185W Processor for HPE P67101-B21

Intel® Xeon®-Gold 5515+ 3.2GHz 8-core 165W Processor for HPE P67079-B21

Core Options

Intel® Xeon®-Silver Processors

Intel® Xeon®-Silver 4516Y+ 2.2GHz 24-core 185W Processor for HPE P67093-B21

Notes:
- 4400 MT/s maximum memory speed.
- 64GB SGX Enclave.

Intel® Xeon®-Silver 4514Y 2.0GHz 16-core 150W Processor for HPE P67092-B21

Notes:
- 4400 MT/s maximum memory speed.
- 64GB SGX Enclave.

Intel® Xeon®-Silver 4510 2.4GHz 12-core 150W Processor for HPE P67091-B21

Notes:
- 4400 MT/s maximum memory speed.
- 64GB SGX Enclave.
- Intel® VROC NVMe feature is not supported.
- 96GB DDR5-5600 DIMM is not supported.

Intel® Xeon®-Silver 4509Y 2.6GHz 8-core 125W Processor for HPE P67090-B21

Notes:
- 4400 MT/s maximum memory speed.
- 64GB SGX Enclave.
- Intel® VROC NVMe feature is not supported.
- 96GB DDR5-5600 DIMM is not supported.

Intel® Xeon®-Bronze Processors

Intel® Xeon®-Bronze 3508U 2.1GHz 8-core 125W Processor for HPE P67100-B21

Notes:
- 4400 MT/s maximum memory speed.
- 64GB SGX Enclave.
- Intel® VROC NVMe feature is not supported.
- Up to PCIe Gen4 supported.
- 96GB DDR5-5600 DIMM is not supported.

Step 2b: Choose Memory Options

Please select one or more memory from below.
For new Gen11 memory population rule whitepaper and optimal memory performance guidelines, please go to: https://www.hpe.com/docs/memory-population-rules

For Gen11 memory speed table, please go to: https://www.hpe.com/docs/memory-speed-table
For memory Reliability, Accessibility, Serviceability (RAS) features whitepaper like Gen10 Fast Fault Tolerance and legacy mirrored memory feature etc. please go to: https://www.hpe.com/psnow/doc/a50007802enw

Notes:

- The maximum memory speed and capacity is a function of the memory type, memory configuration, and processor model.
- Quantity of memory DIMMs selected per socket must be 1, 2, 4, 6, 8, 12 or 16.
- For additional information, refer to the HPE DDR5 Smart Memory QuickSpecs.
- For General Server Memory and Persistent Memory Population Rules and Guidelines, see details here: http://www.hpe.com/docs/memory-population-rules
- HPE Server Memory compatibility for a specific server platform may vary or be limited within a server platform depending upon the specific configuration being requested. Because each server environment and requirements can vary, memory compatibility is based not only upon the server family, but may also be affected by the amount and type of additional hardware options installed within a specific server configuration. For this reason, some HPE memory DIMMs may be qualified for an HPE server model or family and yet occasionally not be supported with some configurations within that server family.
- The new 5600 DIMMs are for the Fifth generation Intel® Xeon® Scalable Processors; while the 4800 DIMMs are for the Fourth generation Intel® Xeon® Scalable Processors.

Memory – for the Fourth Generation Intel® Xeon® Scalable Processors

Description	
HPE 16GB (1x16GB) Single Rank x8 DDR5-4800 CAS-40-39-39 EC8 Registered Smart Memory Kit	P43322-B21
HPE 32GB (1x32GB) Dual Rank x8 DDR5-4800 CAS-40-39-39 EC8 Registered Smart Memory Kit	P43328-B21
HPE 64GB (1x64GB) Dual Rank x4 DDR5-4800 CAS-40-39-39 EC8 Registered Smart Memory Kit	P43331-B21

Memory – for the Fifth Generation Intel® Xeon® Scalable Processors

Description	
HPE 16GB (1x16GB) Single Rank x8 DDR5-5600 CAS-46-45-45 EC8 Registered Smart Memory Kit	P64705-B21
HPE 32GB (1x32GB) Dual Rank x8 DDR5-5600 CAS-46-45-45 EC8 Registered Smart Memory Kit	P64706-B21
HPE 64GB (1x64GB) Dual Rank x4 DDR5-5600 CAS-46-45-45 EC8 Registered Smart Memory Kit	P64707-B21
HPE 96GB (1x96GB) Dual Rank x4 DDR5-5600 CAS-46-45-45 EC8 Registered Smart Memory Kit	P64708-B21

Notes:

- 96GB DDR5-5600 DIMM is not supported with 4510, 4509Y and 3508U processors.
- 96GB DDR5-5600 DIMM are limited to 25°C maximum inlet temperature and system fans may operate at higher speed and higher acoustic level to maintain optimum system cooling condition.

Step 2c: Choose Power Supplies

Notes:

- Mixing 2 different power supplies is NOT supported.
- Selection of two HPE Flex Slot power supplies provide 1+1 power redundancy.
- To review the power requirements for your selected configuration, please use the HPE Power Advisor Tool.

Power Supplies

HPE 500W Flex Slot Platinum Hot Plug Low Halogen Power Supply Kit	865408-B21
HPE 800W Flex Slot Platinum Hot Plug Low Halogen Power Supply Kit	P38995-B21
HPE 1000W Flex Slot Titanium Hot Plug Power Supply Kit	P03178-B21
HPE 1600W Flex Slot Platinum Hot Plug Low Halogen Power Supply Kit	P38997-B21

Notes: Only supports high line voltage (200 VAC to 240 VAC).

Step 3: Choose Additional Factory Integratable Options

Some options may not be integrated at the factory. To ensure only valid configurations are ordered, Hewlett Packard Enterprise recommends the use of an HPE approved configurator. Contact your local sales representative for additional information.

Notes: The User Guide (UG) can help to explain the cable routing for each option.

Storage Devices

Storage Controllers

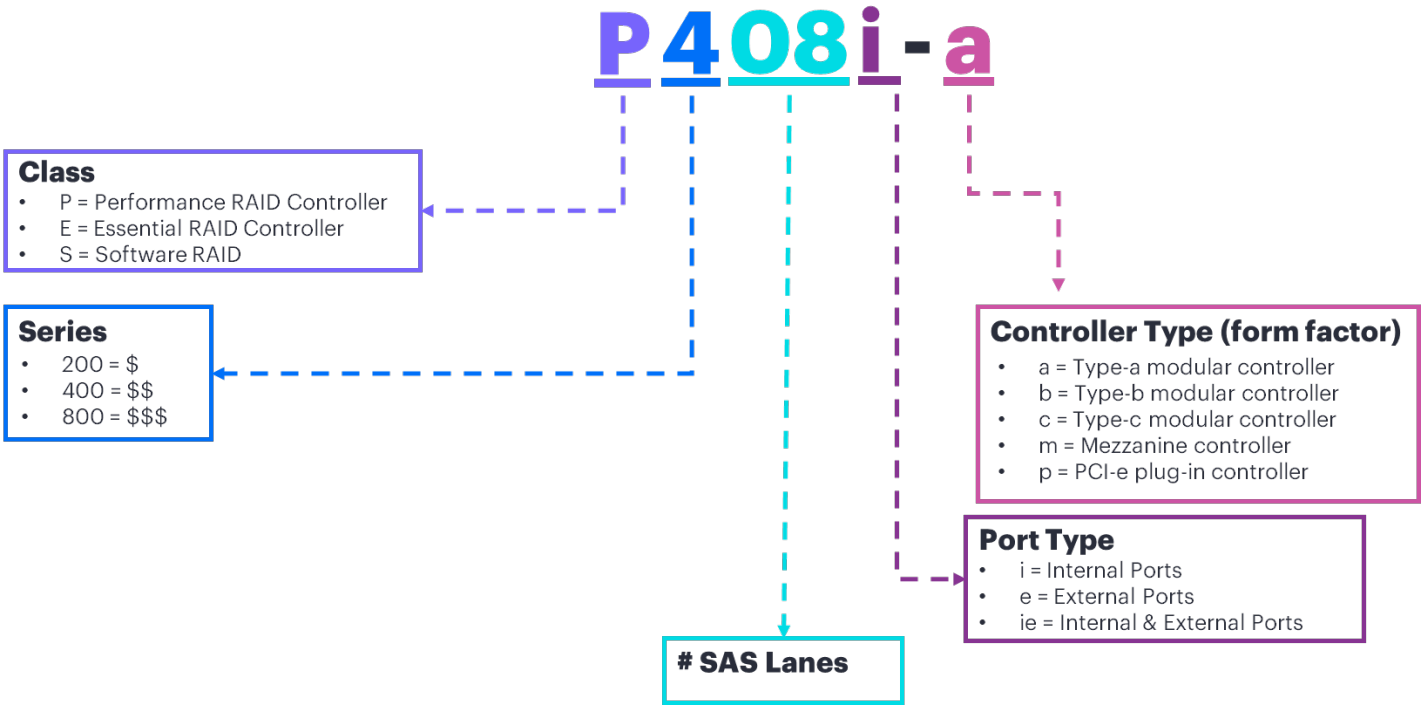

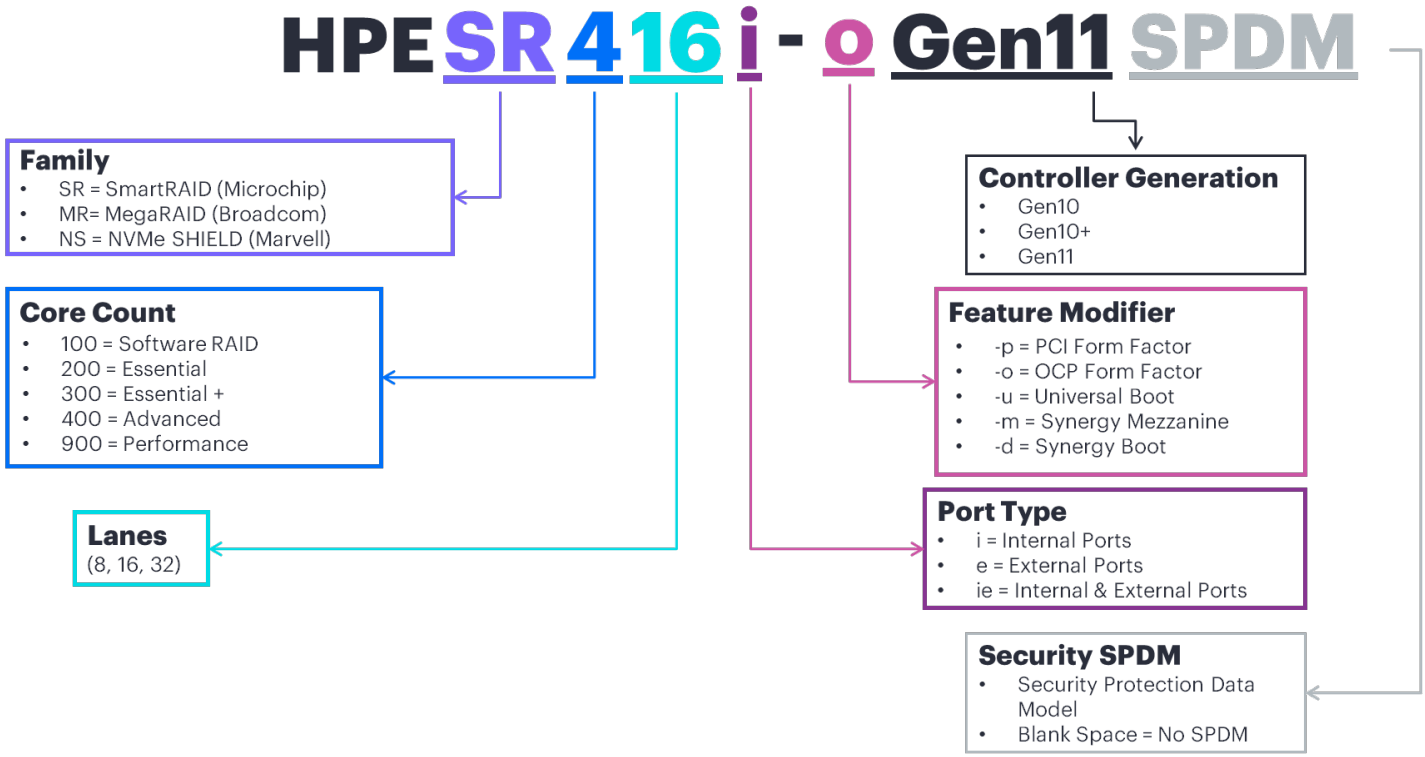

Notes:

- When selecting SR RAID controllers for external storage (E208e, 804398-B21) and MR RAID controllers for internal storage(MR216i/MR416i/MR408i) in the order, please be aware these two products use different RAID configuration tools.
- Not supporting mixing of MR (MegaRAID) series internal controllers and SR (SmartRAID) series internal Controllers
- OCP-type RAID (OROC) controller is only supported on OCP 1 slot.
- OCP 1 enablement kit is not required for listed OROC controllers below.
- For more information on the HPE Gen11 Storage Controller, please refer to:

HPE Compute MR Gen11 Controllers QuickSpecs
HPE Compute SR Gen11 Controllers QuickSpecs

Essential RAID Controllers

HPE Smart Array E208e-p SR Gen10 (8 External Lanes/No Cache) 12G SAS PCIe Plug-in Controller 804398-B21

Notes: This controller supports up to 8 SAS/SATA Drives (external)

For more information on the HPE Smart Array E208i-p SR Gen10 Controller, please refer to the QuickSpecs

Tri-mode RAID Controllers

HPE MR216i-o Gen11 x16 Lanes without Cache OCP SPDM Storage Controller P47789-B21

Notes:

- Does not occupy a PCIe expansion slot.
- This controller supports up to 16 SAS/SATA/NVMe Drives with RAID 0/1/10.

Additional Options

HPE MR216i-p Gen11 x16 Lanes without Cache PCI SPDM Plug-in Storage Controller P47785-B21

Notes: This controller supports up to 16 SAS/SATA/NVMe Drives with RAID 0/1/10.

HPE MR408i-o Gen11 x8 Lanes 4GB Cache OCP SPDM Storage Controller P58335-B21

Notes:

- Does not occupy a PCIe expansion slot.
- This controller supports up to 8 SAS/SATA/NVMe Drives
- HPE 96W Smart Storage Battery 260mm Cable (P01367-B21) OR HPE Smart Hybrid Capacitor w/ 260mm Cable (P02381-B21) must be selected with this controller.

HPE MR408i-p Gen11 x8 Lanes 4GB Cache PCI SPDM Plug-in Storage Controller P74775-B21

Notes:

- This controller supports up to 8 SAS/SATA/NVMe Drives
- HPE 96W Smart Storage Battery 260mm Cable (P01367-B21) OR HPE Smart Hybrid Capacitor w/ 260mm Cable (P02381-B21) must be selected with this controller.

HPE MR416i-o Gen11 x16 Lanes 8GB Cache OCP SPDM Storage Controller P47781-B21

Notes:

- Does not occupy a PCIe expansion slot.
- This controller supports up to 16 SAS/SATA/NVMe Drives
- HPE 96W Smart Storage Battery 260mm Cable (P01367-B21) OR HPE Smart Hybrid Capacitor w/ 260mm Cable (P02381-B21) must be selected with this controller.

HPE MR416i-p Gen11 x16 Lanes 8GB Cache PCI SPDM Plug-in Storage Controller P47777-B21

Notes:

- This controller supports up to 16 SAS/SATA/NVMe Drives
- HPE 96W Smart Storage Battery 260mm Cable (P01367-B21) OR HPE Smart Hybrid Capacitor w/ 260mm Cable (P02381-B21) must be selected with this controller.

Smart Storage Battery Cable Kits

HPE 96W Smart Storage Lithium-ion Battery with 260mm Cable Kit P01367-B21

HPE Smart Storage Hybrid Capacitor with 260mm Cable Kit P02381-B21

Notes: The 260mm cable kits can't be selected together.

Hybrid RAID

Notes:

- Requires UEFI, not supported on Legacy Mode.
- For NVMe SSDs only, there is no PCIe card support.
- Additional steps are required for OS installation with Intel® VROC, please refer to the link Intel Virtual RAID on CPU for HPE Gen11 User Guide - Installing OS on the Intel VROC RAID
- Intel® VROC NVMe feature is not supported with 4510, 4509Y and 3508U processors.

Intel® Virtual RAID on CPU RAID 1 FIO Software for HPE S3Q19A

Notes:

- Supports RAID 1
- ML110 Gen11 supports up to 2x M.2 NVMe drives on onboard slots with Intel® Virtual RAID on CPU RAID 1 (S3Q39AAE/S3Q19A).

Intel® Virtual RAID on CPU RAID 1 E-RTU for HPE S3Q39AAE

Notes:

- Supports RAID 1

- Similar to Intel® Virtual RAID on CPU Standard FIO Software for HPE (S3Q19A), but intended for field deployments (BTO).
- ML110 Gen11 supports up to 2x M.2 NVMe drives on onboard slots with Intel® Virtual RAID on CPU RAID 1 (S3Q39AAE/S3Q19A).

Drive Cage

HPE ProLiant ML110 Gen11 4LFF Non-hot Plug Drive Cage Kit P53481-B21

Notes: Add additional 4 NHP LFF drive cage, allowing for up to 8 NHP LFF SATA drive support (4+4).

HPE ProLiant ML110 Gen11 4LFF Drive Cage Kit P53482-B21

Notes: Add additional 4 LFF hot-plug drive cages, allowing for up to 8 LFF SAS/SATA drive support (4+4).

HPE ProLiant ML110 Gen11 8SFF Drive Cage Kit P53483-B21

Notes: Add additional 8 SFF hot-plug drive cage, allowing for up to 16 SFF SAS/SATA drive support (8+8).

Storage Controller Cables

HPE ProLiant ML110 Gen11 LFF PCIe Cable Kit P53484-B21

Notes: Select this cable kit to support p-type RAID controller with LFF drive cage.

HPE ProLiant ML110 Gen11 SFF OROC Cable Kit P53485-B21

Notes: Select this cable kit to support embedded or OCP-type (OROC) controller with SFF drive cage.

HPE ProLiant ML110 Gen11 SFF PCIe Cable Kit P55859-B21

Notes: Select this cable kit to support p-type RAID controller with SFF drive cage.

Optical Drive

HPE 9.5mm SATA DVD-ROM Optical Drive 726536-B21

HPE 9.5mm SATA DVD-RW Optical Drive 726537-B21

HPE Mobile USB DVD-RW Optical Drive 701498-B21

Riser Cards

HPE ProLiant ML110 Gen11 GPU Riser Kit P53487-B21

Notes:

- Add this riser kit to provide additional PCIe Gen5.0 x16 slot on slot 2.
- An additional PCIe adapter is recommended to be installed on slot 2 to get proper thermal condition.
- When L4 GPU is selected, this riser kit is required.

HPE ProLiant ML110 Gen11 Second GPU Riser Kit P53488-B21

Notes:

- Add this riser kit to provide additional PCIe Gen5.0 x16 slot on slot 3.
- When this Riser Kit is selected, HPE ProLiant ML110 Gen11 GPU Riser Kit (P53487-B21) is required.

HPE Computation and Graphics Accelerators

Notes:

- System memory is recommended to be 2 times larger than the memory with accelerator card.
- Redundant Fan Kit (P49984-B21) is required for any accelerators.
- System fans may operate at higher speed and higher acoustic levels to maintain optimum system cooling condition with accelerator card.
- Mixing GPU types is not supported.

NVIDIA L4 24GB PCIe Accelerator for HPE S0K89C

Notes:

- This GPU requires Redundant Fan Kit (P49984-B21), GPU Riser Kit (P53487-B21), L4 GPU Support Kit (P66618-B21) with 25°C maximum inlet temperature.
- The system supports up to 2x L4 GPUs and can be only installed in GPU Riser Kit. Second GPU Riser Kit (P53488-B21) is required for additional L4 GPU.
- When this GPU is selected, Processor is limited to up to 150W TDP.

HPE ProLiant ML110 Gen11 NVIDIA L4 GPU Support Kit P66618-B21

Notes:

- This support kit supports up to 2x L4 GPUs.
- Memory DIMM blanks within this support kit are required to be installed on all empty memory DIMM slots.

NVIDIA RTX 4000 Ada Graphics Accelerator for HPE S3T54C

Notes:

- This GPU requires Redundant Fan Kit (P49984-B21) and Cable Kit (P70544-B21).
- The system supports up to 2x RTX4000 Ada GPUs and can be installed on slot 1~3. GPU Riser Kit (P53487-B21) and Second GPU Riser Kit (P53488-B21) may require additional GPUs.

HPE ProLiant ML110 Gen11 8-pin/16-pin Cable Kit for NVIDIA GPU P70544-B21

Notes: This cable kit supports up to 2x RTX4000 Ada GPUs.

HPE Drives

HPE Hard Disk Drives

Notes: System fans may operate at higher speed and higher acoustic level to maintain optimum system cooling condition with SAS SFF drives. For noise-sensitive environment, recommend to select SATA SFF SSD or SATA LFF drives in configuration or follow instructions in the Customer Advisory to reduce drive qty in one drive cage.

Note Mission Critical - 12G SAS - SFF Drives	SKU
HPE 300GB SAS 12G Mission Critical 10K SFF BC 3-year Warranty Multi Vendor HDD	P40430-B21
HPE 600GB SAS 12G Mission Critical 10K SFF BC 3-year Warranty Multi Vendor HDD	P53561-B21
HPE 1.2TB SAS 12G Mission Critical 10K SFF BC 3-year Warranty Multi Vendor HDD	P28586-B21
HPE 1.8TB SAS 12G Mission Critical 10K SFF BC 3-year Warranty 512e Multi Vendor HDD	P53562-B21
HPE 2.4TB SAS 12G Mission Critical 10K SFF BC 3-year Warranty 512e Multi Vendor HDD	P28352-B21
Mission Critical - 12G SAS - SFF SED (Self-Encryption Drive)	
HPE 1.2TB SAS 12G Mission Critical 10K SFF BC 3yr Warranty FIPS 140-2 TAA-compliant HDD	P28622-B21
HPE 2.4TB SAS 12G Mission Critical 10K SFF BC 3yr Warranty 512e FIPS 140-2 TAA-compliant HDD	P28618-B21

Business Critical - 12G SAS - LFF Drives	
HPE 4TB SAS 12G Business Critical 7.2K LFF LP 1-year Warranty Multi Vendor HDD	833928-B21
HPE 8TB SAS 12G Business Critical 7.2K LFF LP 1-year Warranty 512e Multi Vendor HDD	834031-B21
HPE 12TB SAS 12G Business Critical 7.2K LFF LP 1-year Warranty Helium 512e Multi Vendor HDD	881781-B21
HPE 16TB SAS 12G Business Critical 7.2K LFF LP 1-year Warranty Helium 512e ISE Multi Vendor HDD	P23608-B21
HPE 20TB SAS 12G Business Critical 7.2K LFF LP 1-year Warranty Helium 512e ISE Multi Vendor HDD	P53553-B21
HPE 24TB SAS 12G Business Critical 7.2K LFF LP 1-year Warranty Helium 512e ISE Multi Vendor HDD	P68583-B21
HPE 26TB SAS 12G Business Critical 7.2K LFF LP 1-year Warranty Helium 512e ISE Multi Vendor HDD	P80577-B21
Business Critical - 6G SATA - LFF Drives	
HPE 1TB SATA 6G Business Critical 7.2K LFF LP 1-year Warranty Multi Vendor HDD	861686-B21
HPE 1TB SATA 6G Business Critical 7.2K LFF RW 1-year Warranty Multi Vendor HDD	801882-B21
HPE 2TB SATA 6G Business Critical 7.2K LFF LP 1-year Warranty Multi Vendor HDD	861681-B21
HPE 4TB SATA 6G Business Critical 7.2K LFF LP 1-year Warranty Multi Vendor HDD	861683-B21
HPE 4TB SATA 6G Business Critical 7.2K LFF RW 1-year Warranty Multi Vendor HDD	801888-B21
HPE 8TB SATA 6G Business Critical 7.2K LFF LP 1-year Warranty 512e Multi Vendor HDD	834028-B21
HPE 12TB SATA 6G Business Critical 7.2K LFF LP 1-year Warranty Helium 512e Multi Vendor HDD	881787-B21
HPE 16TB SATA 6G Business Critical 7.2K LFF LP 1-year Warranty Helium 512e ISE Multi Vendor HDD	P23449-B21
HPE 20TB SATA 6G Business Critical 7.2K LFF LP 1-year Warranty Helium 512e ISE Multi Vendor HDD	P53554-B21
HPE 24TB SATA 6G Business Critical 7.2K LFF LP 1-year Warranty Helium 512e ISE Multi Vendor HDD	P68585-B21
HPE 26TB SATA 6G Business Critical 7.2K LFF LP 1-year Warranty Helium 512e ISE Multi Vendor HDD	P80578-B21

HPE Solid State Drives

Notes: System fans may operate at higher speed and higher acoustic level to maintain optimum system cooling condition with SAS4 24G SFF SSD. For noise-sensitive environment, recommend to select SATA SFF SSD or SATA LFF drives in configuration or follow instructions in the Customer Advisory to reduce drive qty in one drive cage.
For SSD selection guidance, please visit https://ssd.hpe.com/

Note Read Intensive - 12G/24G SAS - SFF - Solid State Drives

	HPE 960GB SAS 12G Read Intensive SFF BC Value SAS Multi Vendor SSD	P40506-B21
	HPE 1.92TB SAS 12G Read Intensive SFF BC Value SAS Multi Vendor SSD	P40507-B21
	HPE 3.84TB SAS 12G Read Intensive SFF BC Value SAS Multi Vendor SSD	P40508-B21
	HPE 7.68TB SAS 12G Read Intensive SFF BC Value SAS Multi Vendor SSD	P40509-B21
2	HPE 960GB SAS 24G Read Intensive SFF BC Multi Vendor SSD	P49029-B21
2	HPE 1.92TB SAS 24G Read Intensive SFF BC Multi Vendor SSD	P49031-B21
1,2	HPE 3.84TB SAS 24G Read Intensive SFF BC Multi Vendor SSD	P49035-B21
1,2	HPE 7.68TB SAS 24G Read Intensive SFF BC Multi Vendor SSD	P49041-B21
1,2	HPE 15.36TB SAS 24G Read Intensive SFF BC Multi Vendor SSD	P49045-B21
	Mixed Use - 12G/24G SAS - SFF - Solid State Drives	
	HPE 960GB SAS 12G Mixed Use SFF BC Value SAS Multi Vendor SSD	P40510-B21
	HPE 1.92TB SAS 12G Mixed Use SFF BC Value SAS Multi Vendor SSD	P40511-B21
	HPE 3.84TB SAS 12G Mixed Use SFF BC Value SAS Multi Vendor SSD	P40512-B21
2	HPE 800GB SAS 24G Mixed Use SFF BC Multi Vendor SSD	P49047-B21
2	HPE 1.6TB SAS 24G Mixed Use SFF BC Multi Vendor SSD	P49049-B21
1,2	HPE 3.2TB SAS 24G Mixed Use SFF BC Multi Vendor SSD	P49053-B21
1,2	HPE 6.4TB SAS 24G Mixed Use SFF BC Multi Vendor SSD	P49057-B21
	Read Intensive - 12G/24G SAS - SFF - SED (Self-Encryption Drive) Solid State Drives	
1,2	HPE 3.84TB SAS Read Intensive SFF BC Self-encrypting FIPS 140-2 PM7 SSD	P63875-B21
1,2	HPE 7.68TB SAS Read Intensive SFF BC Self-encrypting FIPS 140-2 PM7 SSD	P63879-B21
1,2	HPE 3.84TB SAS Read Intensive SFF BC Self-encrypting FIPS 140-3 PM7 SSD	P83347-B21
	Mixed Use - 12G/24G SAS - SFF - SED (Self-Encryption Drive) Solid State Drives	
1,2	HPE 1.6TB SAS Mixed Use SFF BC Self-encrypting FIPS 140-2 PM7 SSD	P63871-B21
1,2	HPE 1.6TB SAS Mixed Use SFF BC Self-encrypting FIPS 140-3 PM7 SSD	P83344-B21
	Mixed Use -12G/24G SAS - LFF- Solid State Drives	
	HPE 960GB SAS 12G Mixed Use LFF LPC Value SAS Multi Vendor SSD	P37009-B21
	Mixed Use - 6G SATA - SFF - Solid State Drives	
	HPE 480GB SATA 6G Mixed Use SFF BC Multi Vendor SSD	P40502-B21
	HPE 960GB SATA 6G Mixed Use SFF BC Multi Vendor SSD	P40503-B21
	HPE 1.92TB SATA 6G Mixed Use SFF BC Multi Vendor SSD	P40504-B21
	HPE 3.84TB SATA 6G Mixed Use SFF BC Multi Vendor SSD	P40505-B21

	Read Intensive - 6G SATA - SFF - Solid State Drives	
	HPE 480GB SATA 6G Read Intensive SFF BC Multi Vendor SSD	P40497-B21
	HPE 960GB SATA 6G Read Intensive SFF BC Multi Vendor SSD	P40498-B21
	HPE 1.92TB SATA 6G Read Intensive SFF BC Multi Vendor SSD	P40499-B21
	HPE 3.84TB SATA 6G Read Intensive SFF BC Multi Vendor SSD	P40500-B21
	HPE 7.68TB SATA 6G Read Intensive SFF BC Multi Vendor SSD	P40501-B21
	HPE 480GB SATA 6G Read Intensive SFF BC PM893a SSD	P63886-B21
	HPE 3.84TB SATA 6G Read Intensive SFF BC PM893a SSD	P63910-B21
	Read Intensive – 6G SATA - LFF – Solid State Drives	
	HPE 960GB SATA 6G Read Intensive LFF LPC Multi Vendor SSD	P47808-B21
	Read Intensive - SATA – M.2 - Solid State Drives	
3	HPE 480GB SATA 6G Read Intensive M.2 Multi Vendor SSD	P47818-B21
	Read Intensive - NVMe – M.2 - Solid State Drives	
3,4	HPE 480GB NVMe Gen4 Mainstream Performance Read Intensive M.2 2280 PE9010 SSD	P80318-B21
3,4	HPE 960GB NVMe Gen4 Mainstream Performance Read Intensive M.2 2280 PE9010 SSD	P80321-B21
3,4	HPE 1.92TB NVMe Gen4 Mainstream Performance Read Intensive M.2 2280 PE9010 SSD	P80324-B21
3,4	HPE 960GB NVMe Gen4 Mainstream Performance Read Intensive M.2 2280 Self-encrypting PE9010 SSD	P80327-B21

Notes:

1. SAS 15K RPM SFF HDD and SAS4 SFF SSD drives which consume power equal to or higher than 15W are limited to 25°C maximum inlet temperature.
2. Redundant Fan Kit (P49984-B21) is required for SAS 10K SFF HDD, SAS 15K SFF HDD and SAS4 SFF SSD.
3. Mixing of SATA M.2 and NVMe M.2 SSDs is not allowed.
4. Intel® VROC NVMe feature is not supported.

Networking

Notes:

- High performance networking cards equal or greater than 100Gb that may cause the fans to operate at higher speed and higher acoustic level to maintain optimum system cooling when system at idle status.
- Direct Attach Cable (DAC) for copper environments or fiber transceivers and cables for fiber-optic environments must be purchased separately. Refer to the related NIC QuickSpecs for Technical Specifications and additional information: https://h20195.www2.hpe.com/v2/getpdf.aspx/A00002507ENW.

PCIe Adapters

1 Gigabit Ethernet adapters	
Broadcom BCM5719 Ethernet 1Gb 4-port BASE-T Adapter for HPE	P51178-B21
Intel® I350-T4 Ethernet 1Gb 4-port BASE-T Adapter for HPE	P21106-B21
10 Gigabit Ethernet adapters	
Broadcom BCM57416 Ethernet 10Gb 2-port BASE-T Adapter for HPE	P26253-B21
Broadcom BCM57412 Ethernet 10Gb 2-port SFP+ Adapter for HPE	P26259-B21
10/25 Gigabit Ethernet adapters	
Broadcom BCM57414 Ethernet 10/25Gb 2-port SFP28 Adapter for HPE	P26262-B21
Intel® E810-XXVDA2 Ethernet 10/25Gb 2-port SFP28 Adapter for HPE	P08443-B21
Mellanox MCX631102AS-ADAT Ethernet 10/25Gb 2-port SFP28 Adapter for HPE	P42044-B21
Intel® E810-XXVDA4 Ethernet 10/25Gb 4-port SFP28 Adapter for HPE	P08458-B21
100 Gigabit Ethernet adapters	
Intel® E810-CQDA2 Ethernet 100Gb 2-port QSFP28 Adapter for HPE	P21112-B21
OCP Adapter	
1 Gigabit Ethernet OCP adapters	
Broadcom BCM5719 Ethernet 1Gb 4-port BASE-T OCP3 Adapter for HPE	P51181-B21
Intel® I350-T4 Ethernet 1Gb 4-port BASE-T OCP3 Adapter for HPE	P08449-B21
10 Gigabit Ethernet OCP Adapters	
Broadcom BCM57412 Ethernet 10Gb 2-port SFP+ OCP3 Adapter for HPE	P26256-B21
Broadcom BCM57416 Ethernet 10Gb 2-port BASE-T OCP3 Adapter for HPE	P10097-B21
10/25 Gigabit Ethernet OCP adapters	
Intel® E810-XXVDA2 Ethernet 10/25Gb 2-port SFP28 OCP3 Adapter for HPE	P10106-B21
Mellanox MCX631432AS-ADAI Ethernet 10/25Gb 2-port SFP28 OCP3 Adapter for HPE	P42041-B21
Broadcom BCM57414 Ethernet 10/25Gb 2-port SFP28 OCP3 Adapter for HPE	P10115-B21
Broadcom BCM57504 Ethernet 10/25Gb 4-port SFP28 OCP3 Adapter for HPE	P26269-B21
100 Gigabit Ethernet adapters	
Intel® E810-CQDA2 Ethernet 100Gb 2-port QSFP28 OCP3 Adapter for HPE	P22767-B21

OS Boot Device

HPE NS204i-u Gen11 NVMe Hot Plug Boot Optimized Storage Device P48183-B21

Notes:

- When NS204i-u is selected, Redundant Fan Kit (P49984-B21) is required.
- When NS204i-u is selected, embedded controller for SATA drive is not available.
- NS204i-u is not supported by NHP CTO server.
- System fans may operate at higher speed and higher acoustic levels to maintain optimum system cooling condition while NS204i-u is installed.
- In order to optimize acoustic level, please consider onboard M.2 drives as boot device in configuration.

HPE ProLiant ML110 Gen11 NS204i-u Enablement Kit P61742-B21

Notes: When NS204i-u is selected, this Enablement Kit is required.

Accessories

HPE ProLiant ML110 Gen11 Serial Port Cable Kit P53489-B21

Security Options

HPE ProLiant Compute ML Gen11/Gen12 Intrusion Cable Kit P47226-B21

Power and Cooling

Cooling Options

HPE ProLiant ML110 Gen11 Redundant Fan Kit P49984-B21

Notes: When one of the following scenarios occurs, Redundant Fan Kit (P49984-B21) is required.

- Server with the following options installed:
  - SAS 10K RPM SFF HDD.
  - SAS 15K RPM SFF HDD.
  - SAS4 SFF SSD.
  - HPE NS204i-u Gen11 NVMe Hot Plug Boot Optimized Storage Device.
  - GPU and accelerators
- Server is required to continue operating with single fan failure. A flashing amber Health LED will indicate this condition.
- Server is required to operate with the A3/A4 extended operating environment with ambient temperature 35 °C (95 °F) to 45 °C (113 °F).

Power Suppliers

HPE Flexible Slot (Flex Slot) Power Supplies share a common electrical and physical design that allows for hot plug, tool-less installation into HPE ProLiant Servers. Flex Slot power supplies are certified for high-efficiency operation and offer multiple power output options, allowing users to "right-size" a power supply for specific server configurations. This flexibility helps to reduce power
waste, lower overall energy costs, and avoid "trapped" power capacity in the datacenter.

Notes:

- Prior to making a power supply selection it is highly recommended that the HPE Power Advisor Tool is run to determine the right size power supply for your server configuration.
- Visit HPE Power Cords and Cables for a full list of optional power cords.
- Flex Slot Platinum power supplies support power efficiency of up to 94% and include a standard C-14 power inlet connector.
- Flex Slot Titanium power supplies support power efficiency of up to 96% and include a standard C-14 power inlet connector.

HPE 500W Flex Slot Platinum Hot Plug Low Halogen Power Supply Kit	865408-B21
HPE 800W Flex Slot Platinum Hot Plug Low Halogen Power Supply Kit	P38995-B21
HPE 1000W Flex Slot Titanium Hot Plug Power Supply Kit	P03178-B21
HPE 1600W Flex Slot Platinum Hot Plug Low Halogen Power Supply Kit	P38997-B21

Notes: Only supports high line voltage (200 VAC to 240 VAC).

Storage Backup

For the complete range of tape drives, autoloaders, libraries, and media see:
https://www.hpe.com/us/en/storage/storeever-tape-storage.html.
For hardware and software compatibility of Hewlett Packard Enterprise tape backup products
https://www.hpe.com/Storage/TapeCompatibilityMatrix.

Notes:

- When an internal LTO tape drive is selected, HPE ProLiant ML110 Gen11 LTO Cable Kit (P62356-B21) and one available port from MR216-o/p or MR408i-o storage controller is required.
- Support up to one internal LTO tape drive in media bay.
- Required to change Thermal Configuration to Increased Cooling mode in BIOS/Platform Configuration (RBSU) menu and system fans may operate at higher speed and higher acoustic level.

HPE Tape Drives

HPE StoreEver LTO-8 Ultrium 30750 External Tape Drive	BC023A
HPE StoreEver LTO-9 Ultrium 45000 External Tape Drive	BC042A
HPE StoreEver LTO-7 Ultrium 15000 External Tape Drive	BB874A
HPE StoreEver LTO-9 Ultrium 45000 Internal Tape Drive	BC040A
HPE StoreEver LTO-8 Ultrium 30750 Internal Tape Drive	BC022A
HPE StoreEver LTO-8 Ultrium 30750 TAA-compliant SAS Internal Tape Drive	BC024A
HPE LTO-7 Ultrium 15000 Internal Tape Drive	BB873A
HPE StoreEver LTO-7 Ultrium 15000 TAA-compliant Internal Tape Drive	BB953A

Internal LTO Support Kit

HPE ProLiant ML110 Gen11 LTO Cable Kit	P62356-B21

Notes: Supporting cables to add internal LTO device for data backup or archiving.

HPE Tape Drives Cartridge

HPE LTO-6 Ultrium 6.25TB RW Data Cartridge	C7976A
HPE LTO-7 Ultrium 15TB RW Data Cartridge	C7977A
HPE LTO-8 Ultrium 30TB RW Data Cartridge	Q2078A
HPE LTO-9 Ultrium 45TB RW Data Cartridge	Q2079A

HPE Tape Backup Products

HPE StoreEver Mini-SAS High Density to 4-lane Mini-SAS External Fanout 2m Cable	K2R09A
HPE StoreEver Mini-SAS High Density to 4-lane Mini-SAS External Fanout 4m Cable	K2R10A

HPE Racks

- Refer to the HPE Advanced Series Racks QuickSpecs for information on additional racks options and rack specifications. HPE G2 Advanced Series Racks
- Refer to the HPE Enterprise Series Racks QuickSpecs for information on additional racks options and rack specifications. HPE G2 Enterprise Series Racks

HPE Power Distribution Units (PDUs)

- Refer to the HPE Basic Power Distribution Units (PDU) QuickSpecs for information on these products and their specifications.
- Refer to the HPE Metered Power Distribution Units (PDU) QuickSpecs for information on these products and their specifications.
- Refer to the HPE Intelligent Power Distribution Unit (PDU) QuickSpecs for information on these products and their specifications.
- Refer to the HPE Metered and Switched Power Distribution Units (PDU) QuickSpecs for information on these products and their specifications.

HPE Rack Options

Refer to the HPE KVM Switches web page for information on these products and their specifications.

Rail Kits

HPE ProLiant Compute ML Gen11/Gen12 Tower to Rack Conversion Kit	P47394-B21

Notes:

- Easy install rack rail tray which takes up 1U height in a standard rack facility with CMA can only be shipped as standalone option package. This kit is supported in both ML350 and ML110 Gen11 for tower to rack conversion.
- HPE rail kits are designed to work with HPE racks in compliance with industry standard EIA-310-E. In the event a customer elects to purchase a third-party rack for use with an HPE rail kit, any such use is at customer's own risk. HPE makes no express or implied warranties with respect to such third-party racks and specifically disclaims any implied warranties of merchantability and fitness for a particular purpose. Furthermore, HPE has no obligation and assumes no liability for the materials, design, specifications, installation, safety, and compatibility of any such third-party racks with any rail kits, including HPE rail kits.

HPE Compute Ops Management

Base SKU

HPE Compute Ops Management Standard 3-year Upfront ProLiant SaaS	R7A11AAE

Upgrade SKUs

HPE Compute Ops Management Standard 5-year Upfront ProLiant SaaS	R7A12AAE
HPE Compute Cloud Management Server FIO Enablement	S1A05A
HPE Compute Ops Management Advanced Flex with ProLiant Enablement	S6C28AAE
HPE Compute Ops Management Advanced 3-year Upfront ProLiant SaaS	S5E59AAE
HPE Compute Ops Management Advanced 5-year Upfront ProLiant SaaS	S5E60AAE
HPE Compute Ops Management Advanced 7-year Upfront ProLiant SaaS	S5E61AAE

For more information, visit the HPE Compute Ops Management QuickSpecs: https://www.hpe.com/psnow/doc/a50004263enw

Supported Servers – CTO only. No OEM. – Complete list can be found here: Latest Supported Server List: https://www.hpe.com/info/com-supported-servers

Converged Infrastructure Management Software

HPE OneView

HPE OneView including 3yr 24x7 Support Flexible Quantity E-LTU	E5Y35AAE
HPE OneView w/o iLO including 3yr 24x7 Support Flexible Quantity E-LTU	P8B26AAE

Insight Software

HPE iLO Advanced

HPE iLO Advanced Electronic License with 1yr Support on iLO Licensed Features	E6U59ABE
HPE iLO Advanced Electronic License with 3yr Support on iLO Licensed Features	E6U64ABE
HPE iLO Advanced 1-server License with 3yr Support on iLO Licensed Features	BD505A
HPE iLO Advanced AKA Tracking License with 3yr Support on iLO Licensed Features	BD507A
HPE iLO Advanced 1-server License with 1yr Support on iLO Licensed Features	512485-B21
HPE iLO Advanced AKA Tracking License with 1yr Support on iLO Licensed Features	512487-B21

Factory Configuration Settings

HPE iLO Common Password FIO Setting	P08040-B21

Notes:

- Replaces iLO default randomized password by an HPE defined common password. HPE highly recommends changing this password immediately after the initial onboarding process.
- Customers who want to choose their own custom iLO default password should use the HPE Factory Express Integration Services.

Memory Population guidelines

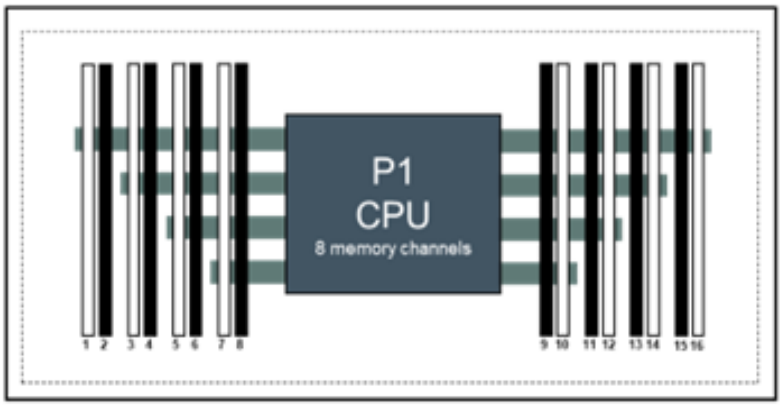

HPE ML110 Gen11 Server (Front of server)

Notes: 2 Slots per channel

HPE ProLiant ML110 Gen11 Servers 16 slots per CPU DIMM population order																
1 DIMM										10						
2 DIMMs[2]			3							10						
4 DIMMs[2]			3				7			10				14		
6 DIMMs			3		5		7			10				14		16
8 DIMMs[1,2]	1		3		5		7			10		12		14		16
12 DIMMs	1	2	3		5	6	7			10	11	12		14	15	16
16 DIMMs[1,2]	1	2	3	4	5	6	7	8	9	10	11	12	13	14	15	16

Notes:

- [1] Support SGX (Software Guard Extensions)
- [2] Support Hemi (hemisphere mode)

General Memory Population Rules and Guidelines:

- Install DIMMs only if the corresponding processor is installed. If only one processor is installed in a 2-processor system, only half of the DIMM slots are available to populate.
- If a memory channel consists of more than one DIMM slot, the white DIMM slot is located furthest from the CPU. White DIMM slots denote the first slot to be populated in a channel. For one DIMM per channel (DPC), populate white DIMM slots only.
- Rank mixing is not allowed on a channel except for 1 rank + 2 rank combination when all 16 DIMMs for a Processor socket is populated. (2 rank in white slot, 1 rank in block slot),
- No x4 mixing with x8 across a socket.
- If multiple CPUs are populated, split the HPE Smart Memory DIMMs evenly across the CPUs and follow the corresponding CPU rules when populating DIMMs.
- To maximize performance, it is recommended to balance the total memory capacity across all installed processors and load the channels similarly whenever possible.
- If the number of DIMMs does not spread evenly across the CPUs, populate as close to evenly as possible.
- Avoid creating an unbalanced configuration for any CPU.
- The maximum memory capacity is a function of the number of DIMM slots on the platform—the largest DIMM capacity qualified on the platform and the number and model of qualified processors installed on the platform.
- Do not mix HPE Smart Memory RDIMMs and HPE Smart Memory LRDIMMs in the same system.
- Rank mixing is not allowed on a channel except for 1 rank + 2 rank combination (2 rank in white slot, 1 rank in block slot), when all 16 DIMMs for a Processor socket is populated.
- The 256 GB 8R 3DS RDIMM can be mixed with 128 GB 4R 3DS RDIMM ONLY in 16 DIMMs populated. 256 GB 8R 3DS RDIMM needs to be in white slot while 128 GB 4R 3DS RDIMM needs to be in black slot.
- The maximum memory speed is a function of the memory type, memory configuration, and processor model.
- DIMMs of different speeds may be mixed in any order; however, the server will select the lowest common speed among all the DIMMs on all the CPUs.
- HPE Smart Memory DIMMs and HPE NVDIMM-Ns from previous generation servers are not compatible with the current generation. Certain HPE Smart Memory features such as memory authentication and enhanced performance may not be supported.
- There are no performance implications for mixing sets of different capacity DIMMs at the same operating speed. For example, latency and throughput will not be negatively impacted by installing an equal number of 32 GB 1rank x4 DDR5-4800 DIMMs (in block slot) and 64 GB 2rank x4 DDR5-4800 DIMMs (in white slot).
- Take each DIMM type and create a configuration as if it were a homogeneous configuration.
- For details on the HPE Server Memory Options Population Rules, visit: http://www.hpe.com/docs/memory-population-rules.
- For additional information, refer to the HPE DDR5 Smart Memory QuickSpecs.

Notes: The maximum memory speed is a function of the memory type, memory configuration, and processor model.

For details on the HPE Server Memory speed, visit: https://www.hpe.com/docs/server-memory.

Storage

8 NHP LFF drive model

Tower – shown with tower feet.

- 2 x 4LFF NHP SATA Drive Cage Kit in Box 1/2.

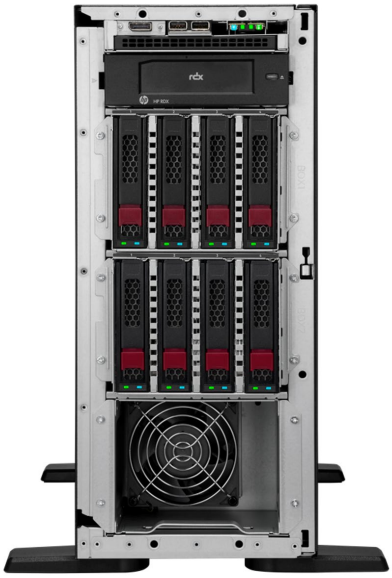

8 LFF hot-plug drive model

Tower – shown with tower feet.

- 2 x 4LFF SAS/SATA hot-pluggable Drive Cage Kit in Box 1/2.

16 SFF hot-plug drive model

Tower – shown with tower feet.

- 2 x 8SFF SAS/SATA hot-pluggable Drive Cage Kit in Box 1/2.

System Unit

Dimensions

- **Tower**
  46.2 (H) x 58.7 (D) x 19.5 (W) cm
  18.19 (H) x 23.1 (D) x 7.68 (W) in
- **Rack – System only**
  19.5 (H/4.5U) x 58.7 (D) x 44.5 (W) cm
  7.68 (H) x 23.1 (D) x 17.5 (W) in
- **Tower-to-Rack Conversion Kit (1U)**
  4.445 (H/1U) x 69.2 (D/without CMA. Depth with CMA: 83.5) x 45.2 (W) cm
  1.75 (H/1U) x 27.23 (D/without CMA. Depth with CMA: 32.89) x 17.795 (W) in

Weight (approximate)

- **20.1 kg (44.31 lb.)**
  SFF Minimum:
  1x 8SFF cage with 1x SFF HDD and 7x SFF HDD blanks, 1x Drive Cage blank, 1x Media Bay blanks, 1x DVD bay blank, 1x processor including standard heatsink, 1x DIMM, 1x power supply (plus blank), 1x x8 HHHL card (Max. 166g), 1x OCP blanks, 1x GPU Riser Cage blank, cables for the above.
- **30.3 kg (66.8 lb.)**
  SFF Maximum:
  16x SFF HDDs with 2x SFF Drive cages, 1x DVD device, 1x processor including standard heatsink, 16x DIMMs, 2x power supply, 1x GPU riser cage, 1x Megacell, 1x OCP, 2x Single Width x16 GPU card, 2x x8 HHHL card (Max. 166g), cables for the above.
- **20.4 kg (44.97 lb.)**
  LFF Minimum:
  1x 4LFF cage with 1x LFF HDD and 3x HDD blanks, 1x Drive Cage blank, 1x Media Bay blanks, 1x DVD bay blank, 1x processor including standard heatsink, 1x DIMM, 1x power supply (plus blank), 1x x8 HHHL card (Max. 166g), 1x Megacell, 1x OCP blanks, 1x GPU Riser Cage blank, cables for the above.
- **33.2 kg (73.19 lb.)**
  LFF Maximum:
  8x LFF HDDs with 2x LFF Drive Cage, 1x DVD device, 1x processor including standard heatsink, 16x DIMMs, 2x power supply, 1x GPUI Riser Cage, 1x Megacell, 1x OCP, 2x Single Width x16 GPU card, 2x x8 HHHL card (Max. 166g), 1x NS204i-u, cables for the above.

Input Requirements (per power supply)

Rated Line Voltage

- 100 to 120 VAC
- 200 to 240 VAC

BTU Rating

Maximum

- For 500W Power Supply: 1902 BTU/hr. (at 100 VAC), 1840 BTU/hr. (at 200 VAC), 1832 BTU/hr. (at 240 VAC)
- For 800W Power Supply: 3067 BTU/hr. (at 100 VAC), 2958 BTU/hr. (at 200 VAC), 2949 BTU/hr. (at 240 VAC)
- For 1000W Power Supply: 3741 BTU/hr. (at 100 VAC), 3596 BTU/hr. (at 200 VAC), 3582 BTU/hr. (at 240 VAC)
- For 1600W Power Supply: 5918 BTU/hr. (at 200 VAC), 5884 BTU/hr. (at 240 VAC)

Power Supply Output (per power supply)

Rated Steady-State Power

- For 1600W (Titanium) Power Supply: 1600W (at 240 VAC), 1600W (at 240 VDC) for China only
- For 1000W (Titanium) Power Supply: 1000W (at 100 VAC), 1000W (at 240 VAC)
- For 800W (Platinum) Power Supply: 800W (at 100 VAC), 800W (at 240 VAC), 800W (at 240 VDC) input for China only
- For 500W (Platinum) Power Supply: 500W (at 100 VAC), 500W (at 240 VAC), 500W (at 240 VDC) input for China only

Maximum Peak Power

- For 1600W (Titanium) Power Supply: 1600W (at 240 VAC), 1600W (at 240 VDC) for China only
- For 1000W (Titanium) Power Supply: 1000W (at 100 VAC), 1000W (at 240 VAC)
- For 800W (Platinum) Power Supply: 800W (at 100 VAC), 800W (at 240 VAC), 800W (at 240 VDC) input for China only
- For 500W (Platinum) Power Supply: 500W (at 100 VAC), 500W (at 240 VAC), 500W (at 240 VDC) input for China only

---

System Inlet Temperature

- **Standard Operating Temperature**
  10 ° to 35 °C (50° to 95°F) at sea level with an altitude derating of 1.0°C per every 305 m (1.8°F per every 1000 ft.) above sea level to a maximum of 3050 m (10,000 ft.), no direct sustained sunlight. Maximum rate of change is 20 °C/hr. (36°F/hr.). The upper limit and rate of change may be limited by the type and number of options installed.
  System performance during standard operating support may be reduced if operating with a fan fault or above 30 °C (86 °F).

- **Extended Ambient Operating Temperature**
  For approved hardware configurations, the supported system inlet range is extended to be: 5° to 10°C (41° to 50°F) and 35° to 40°C (95° to 104°F) at sea level with an altitude derating of 1.0°C per every 175 m (1.8°F per every 574 ft.) above 900 m (2953 ft.) to a maximum of 3050 m (10,000 ft.). The approved hardware configurations for this system are listed at the URL:https://www.hpe.com/support/ASHRAEGen11
  For approved hardware configurations, the supported system inlet range is extended to be: 40° to 45°C (104° to 113°F) at sea level with an altitude derating of 1.0°C per every 125 m (1.8°F per every 410 ft.) above 900 m (2953 ft.) to a maximum of 3050 m (10,000 ft.). The approved hardware configurations for this system are listed at the URL:https://www.hpe.com/support/ASHRAEGen11

System performance may be reduced if operating in the extended ambient operating range or with a fan fault.

- **Non-operating**
  -30° to 60°C (-22° to 140°F). Maximum rate of change is 20°C/hr. (36°F/hr.).

Relative Humidity (non-condensing)

- **Operating**
  8% to 90% - Relative humidity (Rh), 28°C maximum wet bulb temperature, non-condensing.
- **Non-operating**
  5 to 95% relative humidity (Rh), 38.7°C (101.7°F) maximum wet bulb temperature, non-condensing.

Altitude

- **Operating**
  3050 m (10,000 ft.). This value may be limited by the type and number of options installed. Maximum allowable altitude change rate is 457 m/min (1500 ft./min).
- **Non-operating**
  9144 m (30,000 ft.). Maximum allowable altitude change rate is 457 m/min (1500 ft./min).

Emission Classification (EMC) Regulatory Information

To view the regulatory information for your product, view the Safety and Compliance Information for Server, Storage, Power, Networking, and Rack Products, available at the Hewlett Packard Enterprise Support Center: https://support.hpe.com/hpesc/public/docDisplay?docLocale=en_US&docId=c03471072

Environment-friendly Products and Approach End-of-life Management and Recycling

Hewlett Packard Enterprise offers end-of-life product return, trade-in, and recycling programs, in many geographic areas, for our products. Products returned to Hewlett Packard Enterprise will be recycled, recovered or disposed of in a responsible manner.

The European Union Waste Electrical and Electronic Equipment Directive [EU WEEE] (2002/95/EC) requires manufacturers to provide treatment information for each product type for use by treatment facilities. This information (product disassembly instructions) is posted on the Hewlett Packard Enterprise web site. These instructions may be used by recyclers and other WEEE treatment facilities as well as Hewlett Packard Enterprise OEM customers who integrate and re-sell Hewlett Packard Enterprise equipment.

Acoustic Noise

Listed are the declared mean A-Weighted sound power levels (LWA,m), declared average bystander position A-Weighted sound pressure levels (LpAm) and the statistical adder for verification, Kv, is a quantity to be added to the declared mean A-weighted sound power
level, LWA,m when the product is operating in a 23 ± 2°C ambient environment. Noise emissions were measured in accordance with ISO 7779 (ECMA 74) and declared in accordance with ISO 9296 (ECMA 109). The listed sound levels apply to standard shipping configurations. Additional options may result in increased sound levels. Please have your HPE representative provide information from the HPE EMESC website for further technical details regarding the configurations listed below.

Idle	
LWA,m	3.7 B Entry LFF 3.7 B Entry SFF 3.7 B Base SFF 3.7 B Performance SFF
LpAm	22 dBA Entry LFF 22 dBA Entry-SFF 22 dBA Base SFF 22 dBA Performance SFF
Kv	0.4 B Entry LFF 0.4 B Entry SFF 0.4 B Base SFF 0.4 B Performance SFF
Operating	
LWA,m	3.8 B Entry LFF 3.8 B Entry SFF 4.7 B Base SFF 5.0 B Performance SFF
LpAm	24 dBA Entry LFF 24 dBA Entry-SFF 31 dBA Base SFF 37 dBA Performance SFF
Kv	0.4 B Entry LFF 0.4 B Entry SFF 0.4 B Base SFF 0.4 B Performance SFF

Notes:

- All measurements made to conform to ISO 7779 / ECMA-74 and declared to conform to ISO 9296 / ECMA-109. Operating mode is represented by 50% workload of CPU TDP.
- The results in this declaration apply only to the specific configuration listed below when operating and tested according to the indicated modes and standards. A system with additional configuration components or increased operating functionality may increase the noise emission values.

- Entry LFF Configuration: 1x Xeon-B 3408U CPU, 1x SATA 7.2K LFF HDD, 1x 16GB DIMM, 1x 500W PSU, 2x Non-redundant Fan, 1x Embedded 2-Port 1GbE networking ports.
- Entry SFF Configuration: 1x Xeon-B 3408U CPU, 1x SATA 7.2K SFF HDD, 1x 32GB DIMM, 1x 500W PSU, 2x Non-redundant Fan, 1x Embedded 2-Port 1GbE networking ports.
- Base SFF Configuration: 1x Xeon-S 4410Y CPU, 1x SATA 7.2K SFF HDD, 1x 32GB DIMM, 1x 800W PSU, 2x Non-redundant Fan, 1x Embedded 2-Port 1GbE networking ports.
- Performance SFF Configuration: 1x Xeon-G 5416S CPU, 1x SATA 7.2K SFF HDD, 1x 32GB DIMM, 1x 800W PSU, 2x Non-redundant Fan, 1x Embedded 2-Port 1GbE networking ports.

– The declared mean A-weighted sound power level, LWA,m, is computed as the arithmetic average of the measured.
– A-weighted sound power levels for a randomly selected sample, rounded to the nearest 0,1 B.
– The declared mean A-weighted emission sound pressure level, LpA,m, is computed as the arithmetic average of the measured A-weighted emission sound pressure levels at the bystander positions for a randomly selected sample, rounded to the nearest 1 dB.
– The statistical adder for verification, Kv, is a quantity to be added to the declared mean A-weighted sound power level, LWA,m, such that there will be a 95% probability of acceptance, when using the verification procedures of ISO 9296, if no more than 6,5 % of the batch of new equipment, has A-weighted sound power levels greater than (LWA,m + Kv).
– The quantity, LWA,c (formerly called LWAd), can be computed from the sum of LWA,m and Kv.
– B, dB, abbreviations for bels and decibels, respectively, where 1 B = 10 dB.
– Systems under abnormal conditions may increase the noise level, people in the vicinity of the product [cabinet] for extended periods of time should consider wearing hearing protection or using other means to reduce noise exposure.

Recommended Configurations for Acoustic Sensitive Environments

For office-adjacent or low noise deployments, the ML110 Gen11 can maintain comparatively lower acoustic level when configured to minimize thermal load. The following guidance targets the main factors that could affect system fan speed and acoustic level of the platform.

Recommended Storage Choices for Acoustic Considerations

For environments where acoustic noise is a concern, we recommend using the Large Form Factor (LFF) drive cages as the primary storage configuration. LFF drives typically have lower thermal density and require less airflow for cooling compared to the more compact Small Form Factor (SFF) drive cages, resulting in reduced overall system noise.
If SFF drive cage is necessary, limit the configuration to SATA SFF drives only. SATA drives generally operate more quietly than SAS drives, further minimizing acoustic output in sensitive environments.

Hardware Options to Avoid for Acoustic-Sensitive Environments

To minimize system acoustic level, avoid the following hardware options, as they tend to increase baseline system temperature and elevate acoustic level:

– High-speed SAS storage drives: including SAS4, SAS 10K, and SAS 15K drives.
– HPE NS204i-u OS Boot Device.

- High-Capacity Memory Options: including 96GB DDR5 DIMMs.
- Computation and Graphics Accelerators.
- High-speed networking card (NIC): including NIC equal or greater than 100Gb.

These options may require increased cooling, which could result in higher system fan speed and increased acoustic level.

If High-Speed SAS Drives Are Unavoidable

High-speed SAS drives generate additional thermal load and typically increase system fan speed and acoustic level. If these drives must be used, refer to the best practices outlined in the HPE customer advisory for ML110 Gen11.

When configuring SFF SAS drives, install the drives in non-consecutive bays to improve airflow and reduce thermal load. For example:

- In a 4-drive configuration, avoid using slots 1-4 consecutively; instead, use spaced installations such as slots 1, 4, 6, and 8 for better cooling.
- In a 12-drive configuration, stagger drive placement (e.g., slots 1, 2, 4, 5, 7, and 8 in each box) to maintain airflow between drives.

While this spacing approach can mitigate some of the thermal impact of high-speed SAS drives, it does not eliminate the underlying acoustic effects associated with higher-power storage devices.

Summary of Changes

Date	Version History	Action	Description of Change
02-Feb-2026	Version 32	Changed	Standard Features, Pre-Configured Models and Additional Options sections were updated.
		Added	Business Critical - 12G SAS - LFF Drives and Business Critical - 6G SATA - LFF Drives SKUs.
		Removed	Pre-Configured Models obsolete SKUs.
05-Jan-2026	Version 31	Changed	Configuration Information, Additional Options and Technical Specifications sections were updated.
		Added	Read Intensive - 12G/24G SAS - SFF - SED (Self-Encryption Drive) Solid State Drives SKU and Acoustic Noise rules.
		Removed	Business Critical - 12G SAS - LFF Drives obsolete SKUs.
01-Dec-2025	Version 30	Changed	Additional Options section was updated.
		Added	Smart Storage Battery Cable Kit, Read Intensive - 12G/24G SAS - SFF - SED (Self- Encryption Drive) Solid State Drives, and Read Intensive - 12G/24G SAS - SFF - SED (Self-Encryption Drive) Solid State Drives SKUs.
10-Nov-2025	Version 29	Changed	Pre-Configured Models, Core Options and Additional Options sections were updated.
		Removed	Pre-Configured Entry Models, Read Intensive - 6G SATA - SFF - Solid State Drives and Intel® Xeon®-Gold Processors OBS SKUs.
25-Aug-2025	Version 28	Changed	Standard Features section was updated.
		Added	Hybrid RAID rules.
28-Jul-2025	Version 27	Changed	Update survey link.
02-Jun-2025	Version 26	Changed	Overview and Additional Options sections were updated. Added: System Fans rules and Memory Options rules.
05-May-2025	Version 25	Changed	Additional Options section was updated. Added: Software as a Service Management Enablement SKU (COM) and European Union ErP Lot 9 Regulation section to include Turkey and Ireland. Removed: HPE Uninterruptible Power Systems (UPS) SKUs.
07-Apr-2025	Version 24	Changed	Additional Options section was updated. Added: Tri-mode RAID Controller SKU, COM Advanced SKUs and QuickSpecs Survey. Removed: HPE RDX Products SKUs.
03-Mar-2025	Version 23	Changed	Additional Options section was updated.
03-Feb-2025	Version 22	Changed	Standard Features, Pre-Configured Models, Configuration Information, and Additional Options sections were updated. OBS SKU was removed. Intel® VROC Software RAID naming changed to Hybrid RAID.
02-Dec-2024	Version 21	Changed	Additional Options section was updated.
04-Nov-2024	Version 20	Changed	Overview, Configuration Information and Additional Options sections were updated. (Internal LTO tape drive)
03-Sep-2024	Version 19	Changed	Overview, Standard Features (Operating Systems and Virtualization Software Support for HPE Servers), Pre-Configured Models and Additional Options sections were updated.

Summary of Changes

Date	Version History	Action	Description of Change
05-Aug-2024	Version 18	Changed	Standard Features and Additional Options sections were updated.
15-Jul-2024	Version 17	Changed	Pre-Configured Models section was updated.
01-Jul-2024	Version 16	Changed	Overview, Standard Features, Pre-Configured Models and Additional Options sections were updated.
03-Jun-2024	Version 15	Changed	Pre-Configured Models, Configuration Information and Additional Options sections were updated.
06-May-2024	Version 14	Changed	Additional Options section was updated.
01-Apr-2024	Version 13	Changed	Overview, Standard Features, Pre-Configured Models, Configuration Information and Additional Options sections were updated.
18-Mar-2024	Version 12	Changed	Pre-Configured Models section was updated.
04-Mar-2024	Version 11	Changed	Pre-configured SKUs, Drive and UPS options were updated.
05-Feb-2024	Version 10	Changed	Drive options were updated.
08-Jan-2024	Version 9	Changed	ENERGY STAR® 4.0 information and 96GB 5600 memory support limitation were updated.
14-Dec-2023	Version 8	Changed	Intel® 5th Gen processors and 5600 memory options were updated
13-Nov-2023	Version 7	Changed	New Pre-Configured SKU was updated
06-Nov-2023	Version 6	Changed	Optimize Configuration content, add new options support.
05-Sep-2023	Version 5	Changed	Optimize Configuration content, add new Lot 9 required statements and update options sections.
17-Jul-2023	Version 4	Changed	Configuration Information section was updated
10-Jul-2023	Version 3	Changed	Standard Features, Pre-Configured Models, Configuration Information and Core Options sections were updated
05-Jun-2023	Version 2	Changed	Pre-Configured Models, Configuration Information and Core Options sections were updated.
01-May-2023	Version 1	New	New QuickSpecs.

Shape the Future of QuickSpecs - Your Input Matters

Chat now

© Copyright 2026 Hewlett Packard Enterprise Development LP. The information contained herein is subject to change without notice. The only warranties for Hewlett Packard Enterprise products and services are set forth in the express warranty statements accompanying such products and services. Nothing herein should be construed as constituting an additional warranty. Hewlett Packard Enterprise shall not be liable for technical or editorial errors or omissions contained herein.

Intel® and Xeon® are registered trademarks of Intel® Corporation in the U.S. and other countries.
Microsoft®, Windows®, and Windows Server® are U.S. registered trademarks of the Microsoft group of companies.

a00054055enw - 16305 - Worldwide - V32 - 02-February-2026
HEWLETT PACKARD ENTERPRISE
HPE.com