Hewlett Packard Enterprise

HPE ProLiant DL580 Gen10 Server Maintenance and Service Guide

Abstract

This document is for the person who installs, administers, and troubleshoots servers and storage systems. Hewlett Packard Enterprise assumes that you are qualified in the servicing of computer equipment, and trained in recognizing hazards in products with hazardous energy levels.

Part Number: 30-DB8D75C9-405
Published: October 2021
Edition: 15

© Copyright 2017-2021 Hewlett Packard Enterprise Development LP

Notices

The information contained herein is subject to change without notice. The only warranties for Hewlett Packard Enterprise products and services are set forth in the express warranty statements accompanying such products and services. Nothing herein should be construed as constituting an additional warranty. Hewlett Packard Enterprise shall not be liable for technical or editorial errors or omissions contained herein.

Confidential computer software. Valid license from Hewlett Packard Enterprise required for possession, use, or copying. Consistent with FAR 12.211 and 12.212, Commercial Computer Software, Computer Software Documentation, and Technical Data for Commercial Items are licensed to the U.S. Government under vendor's standard commercial license.

Links to third-party websites take you outside the Hewlett Packard Enterprise website. Hewlett Packard Enterprise has no control over and is not responsible for information outside the Hewlett Packard Enterprise website.

Acknowledgments

Intel®, Itanium®, Optane™, Pentium®, Xeon®, Intel Inside®, and the Intel Inside logo are trademarks of Intel Corporation or its subsidiaries.

AMD and the AMD EPYC™ and combinations thereof are trademarks of Advanced Micro Devices, Inc.

Microsoft® and Windows® are either registered trademarks or trademarks of Microsoft Corporation in the United States and/or other countries.

Adobe® and Acrobat® are trademarks of Adobe Systems Incorporated.

Java® and Oracle® are registered trademarks of Oracle and/or its affiliates.

UNIX® is a registered trademark of The Open Group.

All third-party marks are property of their respective owners.



Contents

Illustrated parts catalog 7

Mechanical components 7

Air baffle spare parts 7

Fan cage spare parts 8

Fan spare parts 8

PCIe riser cage spare parts 8

4U bezel ear spare parts 8

Mezzanine bracket spare parts 8

Miscellaneous blank spare parts 9

Cable management arm spare part 9

System components 9

DIMM spare parts 10

HPE 16GB NVDIMM spare part 11

Persistent memory module spare parts 11

Processor spare parts 11

Heatsink spare parts 14

Power supply spare parts 14

PCIe riser board spare parts 15

FlexibleLOM adapter spare parts 15

System board spare parts 15

System battery spare part 15

Expansion board option spare parts 15

Server options 18

Drive spare parts 19

Drive cage spare parts 26

Chassis Intrusion Detection Switch spare part 27

Accelerator and GPU spare parts 27

12G SAS expander board spare part 28

HPE Smart Storage Battery spare part 28

Power module/System Insight Display spare parts 28

CPU Mezzanine UPI performance kit spare part 28

Universal media bay spare part 28

Processor mezzanine tray spare part 29

4-port NVMe mezzanine card spare part 29

HPE Trusted Platform Module 2.0 spare part 29

microSD spare parts 29

Cable spare parts 29

Customer self repair 31

Removal and replacement procedures 40

Safety considerations 40

Preventing electrostatic discharge 40

Symbols on equipment 40

Server warnings and cautions 41

Preparation procedures 42

Power down the server 42
Extending the server from the rack 42
Removing the server from the rack 43
Accessing the Systems Insight Display 43
Releasing the cable management arm 44
Removing the access panel 44
Removing the bezel 46
Removing the CPU Mezzanine UPI performance kit 46
Removing and replacing a drive blank 47
Removing and replacing a hot-plug SAS or SATA drive 48
Removing and replacing an NVMe drive 48
Removing and replacing a Systems Insight Display 50
Removing a primary PCIe riser cage 51
Removing a butterfly PCIe riser cage 52
Removing the air baffle 53
Removing and replacing the fan cage 54
Removing and replacing the fan cage holders 54
Removing and replacing the hot-plug fan 55
Removing and replacing the processor mezzanine tray 56
Removing and replacing a DIMM 57
DIMM-processor compatibility 58
Removing and replacing a persistent memory module 58
Persistent memory module-processor compatibility 60
Configuring the server for Intel Optane persistent memory 100 series for HPE 60
Persistent memory module relocation guidelines 60
Persistent memory module sanitization 61
Removing and replacing an eight-bay SFF HDD/SSD drive cage 62
Removing and replacing an eight-bay NVMe SSD drive cage 63
Removing and replacing a six-bay SFF HDD/two-bay NVMe SSD (Premium) cage 64
Removing and replacing a universal media bay 66
Removing and replacing a two-bay SFF (Premium) drive cage 67
Removing and replacing a 4-port NVMe mezzanine card 68
Removing and replacing a riser board from the primary PCIe riser cage 69
Removing and replacing a riser board from the butterfly PCIe riser cage 70
Removing and replacing an expansion board 72
Removing and replacing the HPE NS204i-p NVMe OS Boot Device option 73
Removing and replacing the boot device 73
Removing and replacing a boot device drive 75
Removing and replacing the Pensando DSP DSC-25 2p SFP28 card 78
Decommissioning the Pensando DSP DSC-25 2p SFP28 card 78
Removing and replacing the Pensando DSP DSC-25 2p SFP28 card 79
Replacing the Pensando DSP DSC-25 2p SFP28 card 80
Removing and replacing a 12G SAS Expander Card 81
Removing and replacing a 940QSFP 56 x16 adapter and auxiliary card 82
Removing and replacing a GPU card 87
Removing and replacing a controller 89
Removing and replacing a CPU Mezzanine UPI performance kit board 91
Removing and replacing a power supply 93
Removing and replacing the power supply backplane 94
Removing and replacing the FlexibleLOM 95
HPE Smart Storage Battery 96
Removing and replacing an HPE Smart Storage Battery 96
Removing and replacing the secondary riser cage blank 97
Removing and replacing a tertiary riser cage blank 98
Removing and replacing an intrusion detection switch 99

Replacing the system battery 100
Removing and replacing a system board 101
Re-entering the server serial number and product ID 107
Setting the server power supply requirements 108
HPE Trusted Platform Module 2.0 Gen10 Option 108

Troubleshooting 109
Troubleshooting resources 109

Diagnostic tools 110
Product QuickSpecs 110
UEFI System Utilities 110
Selecting the boot mode 110
Secure Boot 111
Launching the Embedded UEFI Shell 111
iLO Service Port 112
Intelligent Provisioning 112
Intelligent Provisioning operation 113
HPE Insight Remote Support 114
HPE InfoSight for servers 114
USB support 114
External USB functionality 114
HPE Smart Storage Administrator 114
HPE MR Storage Administrator 115
StorCLI 115

Component identification 117
Front panel components 117
Universal media bay components 120
Drive bay numbering 120
Front panel LEDs and buttons 122
UID button functionality 124
Front panel LED power fault codes 124
Systems Insight Display LEDs 125
Systems Insight Display combined LED descriptions 126
Drives 128
Hot-plug drive LED definitions 128
Smart Carrier NVMe (SCN) drive LED definitions 129
SAS/SATA drive components and LEDs 130
Drive guidelines 131
Rear panel components 132
Rear panel LEDs 134
Power supply LEDs 134
Fan bay numbering 135
PCIe slot numbering 135
System board components 136
System maintenance switch descriptions 137
Processor, heatsink, and socket components 138
DIMM slot locations 139
DIMM label identification 140
Intel Optane persistent memory 100 series for HPE label identification 141
Drive cage backplane identification 142

Riser board components 144
Storage controller components 146
HPE NS204i-p NVMe OS Boot Device components 146
HPE NS204i-p NVMe OS Boot Device LED definitions 146
HPE 12G SAS Expander Card port numbering 147
HPE Smart Array P824i-p MR Gen10 Controller 147
HPE InfiniBand HDR/Ethernet 940QSFP 56x16 adapter LEDs 148
DSC-25 2-port SFP28 card ports and LEDs 149

Cabling 151
Storage Cabling Guidelines 151
Cable matrix 151
NVMe drive cable matrix 153
Universal media bay cabling 161
Front panel USB port cabling 162
Power switch module/Systems Insight Display module cabling 162
SFF HDD drive cage cabling 162
NVMe SSD drive cage cabling 163
Eight-bay NVMe SSD drive cage cabling 164
Six-bay SFF HDD/Two-bay NVMe SSD (Premium) drive cage cabling 168
Two-bay SFF (Premium) drive cage 170
12G SAS expander cabling 171
HPE Smart Array MR Gen10 controller cabling 172
HPE Smart Storage Battery cabling 174

Specifications 176
Environmental specifications 176
System Inlet Temperature, Extended Ambient Operating Support 177
Mechanical specifications 177
Power supply specifications 177
HPE 800 W Flex Slot Platinum Hot-plug Low Halogen Power Supply 178
HPE 800 W Flex Slot -48 VDC Hot-plug Low Halogen Power Supply 179
HPE 1600 W Flex Slot Platinum Hot-plug Low Halogen Power Supply 180

Websites 181

Support and other resources 182
Accessing Hewlett Packard Enterprise Support 182
Accessing updates 182
Remote support 183
Warranty information 183
Regulatory information 183
Documentation feedback 184

Illustrated parts catalog

Mechanical components

Hewlett Packard Enterprise continually improves and changes product parts. For complete and current supported parts information, see the Hewlett Packard Enterprise (**http://www.hpe.com/info/partssurfer**).

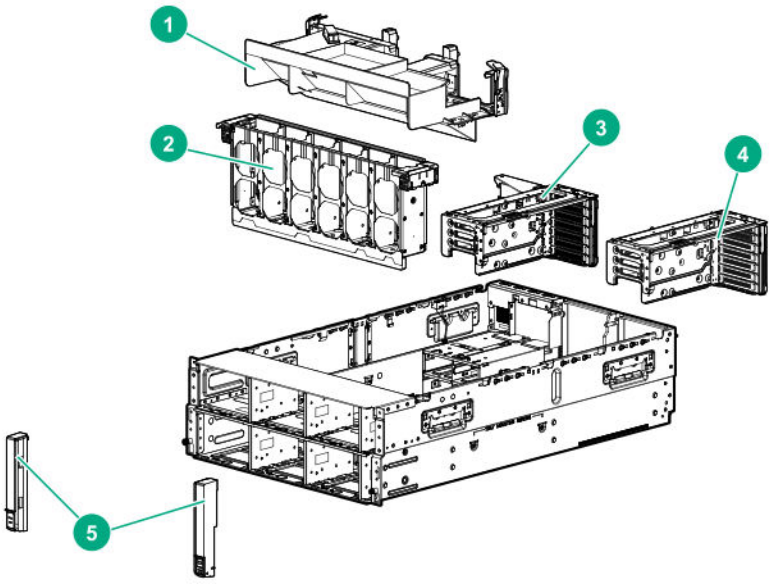

Item	Description
1	**Air baffle spare parts**
2	**Fan cage spare parts**
3, 4	**PCIe riser cage spare parts**
5	**4U bezel ear spare parts**
—	**Fan spare parts**[1]
—	**Mezzanine bracket spare parts**[1]
—	**Miscellaneous blank spare parts**[1]
—	**Cable management arm spare part**[1]

[1] Not shown

For more information, see **Removal and replacement procedures**.

Air baffle spare parts

Customer self repair: **Mandatory**

Description	Spare part number
Air baffle (one- or two-processor configurations)	881694-001
Air baffle (four-processor configuration)	881690-001

Fan cage spare parts

Customer self repair: **Mandatory**

Description	Spare part number
Fan cage with louvers	881686-001
Fan cage bracket kit, right and left	881689-001

Fan spare parts

Customer self repair: **Mandatory**

Description	Spare part number
Fan assembly (two fans)	881467-001

PCIe riser cage spare parts

Customer self repair: **Mandatory**

Description	Spare part number
Primary PCIe riser cage	881691-001
Butterfly PCIe riser cage	881695-001
Riser cage blanks	881693-001

4U bezel ear spare parts

Customer self repair: **Mandatory**

Description	Spare part number
Left bezel ear assembly	881687-001
Right bezel ear assembly	881688-001

Mezzanine bracket spare parts

Customer self repair: **Mandatory**

Description	Spare part number
Mezzanine front and rear bracket kit	878408-001
Rear mezzanine bracket	881692-001

Miscellaneous blank spare parts

Customer self repair: **Mandatory**

Description	Spare part number
HDD bay blank kit	777301-001
SFF HDD bay blank	670033-001
SFF hard drive blank	675607-001
2SFF bay blank	875069-001
SFF hard drive blank G8	667276-001
Optical drive blank	684958-001
Power supply blank	775423-001
Processor dust cover/blank	878418-001
HPE Smart Storage Battery latch and retainer kit	878417-001
Fan blanks, HPE Smart Storage Battery latch, retainers	875066-001
Miscellaneous hardware kit	809955-001

Cable management arm spare part

Customer self repair: **Mandatory**

Description	Spare part number
4U Rail Kit with Cable Management Arm	P09241-001

System components

Hewlett Packard Enterprise continually improves and changes product parts. For complete and current supported parts information, see the Hewlett Packard Enterprise (**http://www.hpe.com/info/partssurfer**).

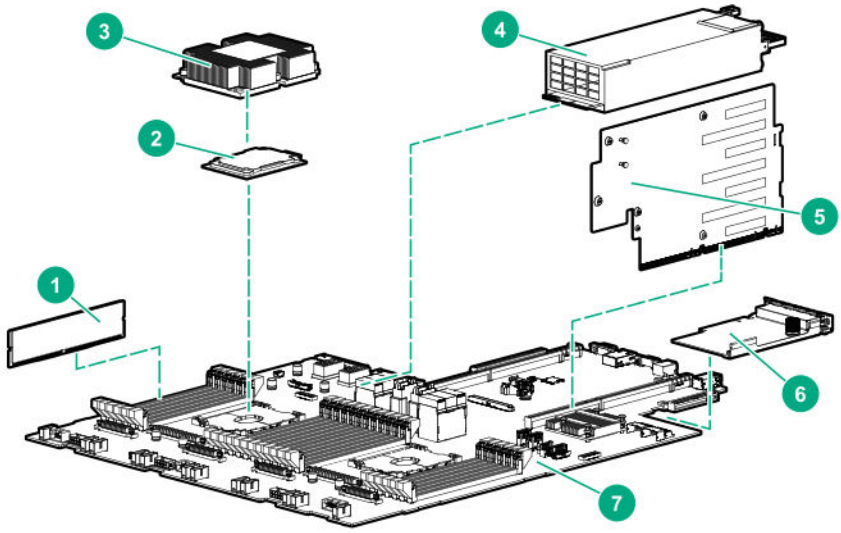

Item	Description
1	• **DIMM spare parts** • **HPE 16GB NVDIMM spare part** • **Persistent memory module spare parts**
2	**Processor spare parts**
3	**Heatsink spare parts**
4	**Power supply spare parts**
5	**PCIe riser board spare parts**
6	**FlexibleLOM adapter spare parts**
7	**System board spare parts**
—	**System battery spare part**[1]
—	**Expansion board option spare parts**[1]
—	**Smart I/O (Pensando Distributed Services Platform) spare part**[1]
—	**HPE NS204i-p NVMe OS Boot Device spare parts** [1]

[1] Not shown

For more information, see **Removal and replacement procedures**.

DIMM spare parts

Customer self repair: **Mandatory**

2666 MT/s DIMMs

Description	Spare part number
DIMM, 8GB PC4-2666V-R, 1Gx8	850879-001
DIMM, 8GB PC4-2666V-R, 512Mx8	878490-001
DIMM, 16GB PC4-2666V-R, 2Rx4	850880-001
DIMM, 16GB PC4-2666V-R, 2Rx8	868846-001
DIMM, 32GB PC4-2666V-R, 2Gx4	850881-001
DIMM, 64GB PC4-2666V-L, 2Gx4	850882-001
DIMM, 128GB PC4-2666V-L, 2Gx4	850883-001

2933 MT/s DIMMs

Description	Spare part number
DIMM, 8GB PC4-2933Y-R, 1Gx8	P06186-001
DIMM, 16GB PC4-2933Y-R, 2Gx4	P06187-001

Table Continued

Description	Spare part number
DIMM, 16GB PC4-2933Y-R, 1Gx8	P06188-001
DIMM, 32GB PC4-2933Y-R, 2Gx4	P06189-001
DIMM, 64GB PC4-2933Y-L, 2Gx4	P06190-001
DIMM, 64GB PC4-2933Y-R, 4Gx4	P06192-001
DIMM, 128GB PC4-2933Y-L, 2Gx4	P06191-001
DIMM, 128GB PC4-2933Y-L, 4Gx4	P16001-001
DIMM, 128GB PC4-2933Y-L, 4Gx4	P19402-001

HPE 16GB NVDIMM spare part

Customer self repair: **Mandatory**

Description	Spare part number
NVDIMM 16GB 1Rx4 NN4-2666V-R	874540-001

Persistent memory module spare parts

Customer self repair: **Mandatory**

Description	Spare part number
Intel Optane 128GB PMem 100 for HPE	844071-001
Intel Optane 256GB PMem 100 for HPE	844072-001
Intel Optane 512GB PMem 100 for HPE	844073-001

Processor spare parts

First generation Intel Xeon Scalable Processor spare parts

Customer self repair: **No**

51XX processors

Description	Spare part number
2.4 GHz Intel Xeon-G 5115 processor	878082-001
2.3 GHz Intel Xeon-G 5118 processor	875717-001
2.2 GHz Intel Xeon-G 5120 processor	875718-001
3.6 GHz Intel Xeon-G 5122 processor	875719-001

61XX processors

Description	Spare part number
2.6 GHz Intel Xeon-G 6126 processor	875720-001
3.4 GHz Intel Xeon-G 6128 processor	875721-001
2.1 GHz Intel Xeon-G 6130 processor	874736-001
2.6 GHz Intel Xeon-G 6132 processor	875722-001
3.2 GHz Intel Xeon-G 6134 processor	875723-001
3.2 GHz Intel Xeon-G 6134M processor	878083-001
3.0 GHz Intel Xeon-G 6136 processor	875724-001
2.0 GHz Intel Xeon-G 6138 processor	874735-001
2.3 GHz Intel Xeon-G 6140 processor	874734-001
2.3 GHz Intel Xeon-G 6140M processor	878084-001
2.6 GHz Intel Xeon-G 6142 processor	874733-001
2.6 GHz Intel Xeon-G 6142M processor	878085-001
2.8 GHz Intel Xeon-G 6143 processor	882169-001
3.5 GHz Intel Xeon-G 6144 processor	875725-001
3.2 GHz Intel Xeon-G 6146 processor	875726-001
2.4 GHz Intel Xeon-G 6148 processor	874732-001
2.7 GHz Intel Xeon-G 6150 processor	874731-001
2.1 GHz Intel Xeon-G 6152 processor	874730-001
3.0 GHz Intel Xeon-G 6154 processor	875727-001

81XX processors

Description	Spare part number
2.0 GHz Intel Xeon-P 8153 processor	875728-001
3.6 GHz Intel Xeon-P 8156 processor	875732-001
3.0 GHz Intel Xeon-P 8158 processor	875733-001
2.1 GHz Intel Xeon-P 8160 processor	874729-001
2.0 GHz Intel Xeon-P 8164 processor	875729-001
2.3 GHz Intel Xeon-P 8165 processor	P00868-001
2.7 GHz Intel Xeon-P 8168 processor	875730-001
2.1 GHz Intel Xeon-P 8170 processor	874728-001
2.1 GHz Intel Xeon-P 8170M processor	878087-001
2.1 GHz Intel Xeon-P 8176 processor	874727-001
2.1 GHz Intel Xeon-P 8176M processor	878088-001

Table Continued

Description	Spare part number
2.5 GHz Intel Xeon-P 8180 processor	875731-001
2.5 GHz Intel Xeon-P 8180M processor	878089-001

Second-generation Intel Xeon Scalable Processor spare parts

Customer self repair: **No**

52XX processors

Description	Spare part number
2.5 GHz Intel Xeon-G 5215 processor	P11610-001
2.6 GHz Intel Xeon-G 5215L processor	P11631-001
2.6 GHz Intel Xeon-G 5215M processor	P11626-001
3.0 GHz Intel Xeon-G 5217 processor	P11611-001
2.3 GHz Intel Xeon-G 5218 processor	P11612-001
2.3 GHz Intel Xeon-G 5218B processor	P12532-001
2.3 GHz Intel Xeon-G 5218N processor	P12021-001
2.2 GHz Intel Xeon-G 5220 processor	P11613-001
2.7 GHz Intel Xeon-G 5220S processor	P11627-001
3.8 GHz Intel Xeon-G 5222 processor	P11632-001

62XX processors

Description	Spare part number
1.8 GHz Intel Xeon-G 6222V processor	P12019-001
2.7 GHz Intel Xeon-G 6226 processor	P12008-001
2.1 GHz Intel Xeon-G 6230 processor	P11614-001
2.3 GHz Intel Xeon-G 6230N processor	P12022-001
3.3 GHz Intel Xeon-G 6234 processor	P12009-001
2.1 GHz Intel Xeon-G 6238 processor	P12010-001
2.1 GHz Intel Xeon-G 6238L processor	P12016-001
2.1 GHz Intel Xeon-G 6238M processor	P12014-001
2.6 GHz Intel Xeon-G 6240 processor	P11615-001
2.6 GHz Intel Xeon-G 6240L processor	P12015-001
2.6 GHz Intel Xeon-G 6240M processor	P12013-001
2.6/2.8/3.1 GHz Intel Xeon-G 6240Y processor	P11637-001
2.8 GHz Intel Xeon-G 6242 processor	P11616-001
3.6 GHz Intel Xeon-G 6244 processor	P11617-001

Table Continued

Description	Spare part number
3.3 GHz Intel Xeon-G 6246 processor	P12018-001
2.5 GHz Intel Xeon-G 6248 processor	P11618-001
2.1 GHz Intel Xeon-G 6252 processor	P11619-001
2.3 GHz Intel Xeon-G 6252N processor	P12023-001
3.1 GHz Intel Xeon-G 6254 processor	P11620-001
3.6 GHz Intel Xeon-G 6256 processor	P25093-001
1.9 GHz Intel Xeon-G 6262V processor	P12020-001

82XX processors

Description	Spare part number
2.2 GHz Intel Xeon-P 8253 processor	P12011-001
3.8 GHz Intel Xeon-P 8256 processor	P12012-001
2.4 GHz Intel Xeon-P 8260 processor	P11621-001
2.4 GHz Intel Xeon-P 8260L processor	P11633-001
2.4 GHz Intel Xeon-P 8260M processor	P11628-001
2.3 GHz Intel Xeon-P 8260Y processor	P11638-001
2.9 GHz Intel Xeon-P 8268 processor	P11622-001
2.6 GHz Intel Xeon-P 8270 processor	P11623-001
2.2 GHz Intel Xeon-P 8276 processor	P11624-001
2.2 GHz Intel Xeon-P 8276L processor	P11634-001
2.2 GHz Intel Xeon-P 8276M processor	P11629-001
2.7 GHz Intel Xeon-P 8280 processor	P11625-001
2.7 GHz Intel Xeon-P 8280L processor	P11635-001
2.7 GHz Intel Xeon-P 8280M processor	P11630-001

Heatsink spare parts

Customer self repair: **No**

Description	Spare part number
Standard heatsink	872452-001
1U high-performance heatsink	P13347-001

Power supply spare parts

Customer self repair: **Mandatory**

Description	Spare part number
HPE 800W Flex Slot -48VDC Hot Plug Low Halogen Power Supply	866728-001
HPE 800W Flex Slot Platinum Hot Plug Low Halogen Power Supply	866730-001
HPE 1600W Flex Slot Platinum Hot Plug Low Halogen Power Supply	863373-001
Power supply backplane	881685-001

PCIe riser board spare parts

Customer self repair: **Optional**

Description	Spare part number
2-Slot tertiary PCIe riser	881683-001
4-Slot x8 Slimline riser	875087-001
6-Slot PCIe riser	881684-001
7-Slot PCIe riser	881682-001
NVMe riser	881698-001

FlexibleLOM adapter spare parts

Customer self repair: **Mandatory**

Description	Spare part number
HPE Ethernet 1Gb 4P 331FLR Adapter	789897-001
HPE Ethernet 10Gb 2P 535FLR-T Adapter	854177-001
HPE Ethernet 10/25Gb 2P 640FLR-SFP28 Adapter	840139-001

System board spare parts

Customer self repair: **Optional**

Description	Spare part number
System board	P11741-001

System battery spare part

Customer self repair: **Mandatory**

Description	Spare part number
System battery	319603-001

Expansion board option spare parts

Customer self repair: **Mandatory**

Smart Array SAS controllers

Description	Spare part number
HPE Smart Array E208i-p SR Gen10 Controller	836266-001
HPE Smart Array E208e-p SR Gen10 Controller	836267-001
HPE Smart Array P408e-p SR Gen10 Controller	836270-001
HPE Smart Array P408i-p SR Gen10 Controller	836269-001
HPE Smart Array P824i-p MR Gen10 Controller	871043-001

Fibre channel controllers

Description	Spare part number
HPE SN1600Q 32Gb 1P FC HBA	868140-001
HPE SN1600Q 32Gb 2P FC HBA	868141-001
HPE SN1600E 32Gb 1P FC HBA	869999-001
HPE SN1600E 32Gb 2P FC HBA	870000-001
HPE CN1100R 2P CNA	706801-001
HPE StoreFabric CN1100R-T 10Gb CNA	827605-001
HPE StoreFabric CN1200E 10Gb CNA	767078-001
HPE StoreFabric CN1200E-T 10Gb CNA	827607-001
HPE SN1200E 16Gb 1p FC HBA	870001-001
HPE SN1200E 16Gb 2p FC HBA	870002-001
HPE StoreFabric CN1200R 10GBASE-T CNA	872527-001
HPE StoreFabric CN1300R 10/25Gb CNA	872526-001
HPE SN1100Q 16Gb 1P FC HBA	863010-001
HPE SN1100Q 16Gb 2P FC HBA	853011-001
HPE SN1200E 16Gb 1P FC HBA	870001-001
HPE SN1200E 16Gb 2P FC HBA	870002-001

Network controllers

Description	Spare part number
HPE Ethernet 10/25Gb 2p 631FLR-SFP28 adapter	840133-001
HPE FlexFabric 10Gb 4P 536FLR-T adapter	768082-001
HPE Ethernet 10Gb 2P 530SFP+ adapter	656244-001
HPE FlexFabric 10Gb 2P 534FLR-SFP+ adapter	701531-001
HPE Ethernet 10/25Gb 2p 631SFP28 adapter	840130-001
HPE Ethernet 10Gb 2p 535T adapter	815669-001

Table Continued

Description	Spare part number
HPE Ethernet 10Gb 2p 535FLR-T adapter	854177-001
HPE Ethernet 1Gb 4P 331FLR adapter	789897-001
HPE FlexFabric 10Gb 2P 533FLR-T adapter	701534-001
HPE Ethernet 10Gb 2-port 562SFP+ adapter	790316-001
HPE Ethernet 10Gb 2p 562T adapter	840137-001
HPE Ethernet 10Gb 2-port 562FLR-SFP+ adapter	790317-001
HPE Ethernet 10Gb 2p 562FLR-T adapter	840138-001
HPE Ethernet 1Gb 4-port 366FLR adapter	669280-001
HPE Ethernet 1Gb 4-port 366T adapter	816551-001
HPE Ethernet 10/25Gb 2P 640FLR-SFP28 adapter	840139-001
HPE Ethernet 10/25Gb 2P 640SFP28 adapter	840140-001
HPE Ethernet 1Gb 4-port 331T adapter	649871-001
HPE Ethernet 10/25Gb 2p 621SFP28 adapter	869570-001
HPE Ethernet 10Gb 2p 522FLR-T CNA	869571-001
HPE Ethernet 4x25Gb 1p 620QSFP28 adapter	840134-001
HPE Ethernet 10/25Gb 2p 622FLR-SFP28 CNA	869572-001
HPE Ethernet 10Gb 2p 521T adapter	869573-001
HPE Ethernet 100Gb 1p 842QSFP28 adapter	877697-001
HPE Ethernet 10Gb 2P 530T adapter	657128-001
HPE Ethernet 1Gb 2P 361T adapter	656241-001
HPE Ethernet 1Gb 2P 332T adapter	616012-001
HPE Ethernet 10Gb 2P 524SFP+ Adapter	P11585-001
HPE Ethernet 10Gb 2P 548SFP+ Adapter	P12531-001

InfiniBand adapters

Description	Spare part number
HPE IB FDR/EN 40Gb 2P 544+FLR-QSFP adapter	764737-001
HPE IB FDR/EN 40Gb 2P 544+QSFP adapter	764736-001
HPE IB EDR 100Gb 1p 841QSFP28 adapter	878578-001
HPE IB EDR/EN 100Gb 2p 841QSFP28 adapter	878579-001
HPE IB FDR/EN 40/50Gb 547FLR 2QSFP adapter	879667-001
HPE IB EDR/EN 100Gb 1P 840QSFP28 adapter	828107-001
HPE IB EDR/EN 100Gb 2P 840QSFP28 adapter	828108-001
HPE 100Gb 1p OP101 QSFP28 x16 OPA adapter	841703-001

Table Continued

Description	Spare part number
HPE 100Gb 1p OP101 QSFP28 x8 OPA adapter	841702-001
HPE InfiniBand HDR/Ethernet 200Gb 1-port 940 QSFP 56 x16 Adapter	P08354-001
HPE InfiniBand HDR PCIe G3 Auxiliary card with 350 mm cable kit	P10331-001
HPE InfiniBand HDR100/Ethernet 1-port 940 QSFP 56 x16 Adapter	P08356-001
HPE InfiniBand HDR100/Ethernet 100Gb 2-port 940 QSFP 56 x16 Adapter	P08355-001

HPE NS204i-p NVMe OS Boot Device spare parts

Customer self repair: **Mandatory**

Description	Spare part number
HPE NS204i-p NVMe OS Boot Device	P14379-001
480 GB NVMe x4 RI M.2 22110 DS SSD	P24886-001

Smart I/O (Pensando Distributed Services Platform) spare part

Customer self repair: **Mandatory**

Description	Spare part number
Pensando Distributed Services Platform DSC-25 10/25G 2-port SFP28 card	P27682-001

Server options

Hewlett Packard Enterprise continually improves and changes product parts. For complete and current supported parts information, see the Hewlett Packard Enterprise (**http://www.hpe.com/info/partssurfer**).

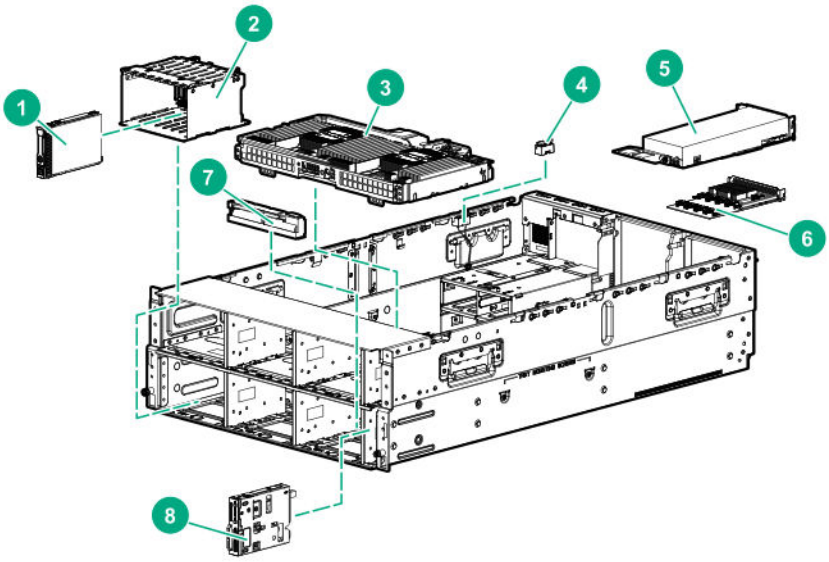

Item	Description
1	**Drive spare parts**
2	**Drive cage spare parts**
3	**Processor mezzanine tray spare part**
4	**Chassis Intrusion Detection Switch spare part**
5	**Accelerator and GPU spare parts**
6	**12G SAS expander board spare part**
7	**HPE Smart Storage Battery spare part**
8	**Power module/System Insight Display spare parts**
—	**CPU Mezzanine UPI performance kit spare part**[1]
—	**Universal media bay spare part**[1]
—	**4-port NVMe mezzanine card spare part**[1]
—	**HPE Trusted Platform Module 2.0 spare part**[1]
—	**microSD spare parts**[1]
—	**Cable spare parts**[1]

[1] Not shown

For more information, see **Removal and replacement procedures**.

Drive spare parts

Hot-plug drive spare parts

Customer self repair: **Mandatory**

Description	Spare part number
300 GB SAS 10K SFF SC DS HDD	872735-001
300 GB SAS 15K SFF SC DS HDD	870792-001
600 GB SAS 10K SFF SC DS HDD	872736-001
600 GB SAS 15K SFF SC 512e DS HDD	870797-001
600 GB SAS 15K SFF SC DS HDD	870794-001
900 GB SAS 15K SFF SC 512e DS HDD	870798-001
900 GB SAS 15K SFF SC DS HDD	870795-001
1 TB SAS 7.2K SFF SC 512e DS HDD	765872-001
1 TB SAS 7.2K SFF SC DS HDD	832984-001
1.2 TB SAS 10K SFF SC DS HDD	872737-001
1.8 TB SAS 10K SFF SC 512e DS HDD	872738-001
2 TB SAS 7.2K SFF SC 512e DS HDD	765873-001
2.4 TB SAS 12G 10K SFF SC 512e DS HDD	881507-001

Solid-state drive M.2 spare parts

Customer self repair: **Mandatory**

Description	Spare part number
120 GB SATA RI HH Dual M.2 Kit	835802-001
120 GB SATA RI HH M.2 Kit	797907-001
120 GB 6G SATA RI M.2 2280 SSD	781565-001
150 GB SATA RI M.2 2280 DS SSD	875835-001
150 GB SATA RI M.2 SFF SCM DS SSD	882402-001
240 GB SATA MU M.2 2280 DS SSD	875850-001
340 GB SATA RI Dual M.2 Kit	835802-001
340 GB SATA RI M.2 2280 SSD	781566-001
480 GB SATA MU M.2 2280 DS SSD	875851-001
480 GB SATA RI M.2 2280 DS SSD	875836-001
480 GB SATA RI M.2 2280 DS SSD	875855-001
480 GB SATA RI M.2 SFF SCM DS SSD	882403-001
960 GB SATA MU M.2 2280 DS SSD	875852-001
960 GB SATA RI M.2 2280 DS SSD	875856-001
1.92 TB SATA MU M.2 2280 DS SSD	875853-001
1.92 TB SATA RI M.2 2280 DS SSD	875854-001
M.2 ML/DL SATA riser assembly	882359-001

Solid-state drive SATA spare parts

Customer self repair: **Mandatory**

Description	Spare part number
120 GB SATA MU SFF SC SSD	817096-001
150 GB SATA 6G RI SFF SC DS SSD	869575-001
200 GB SATA WI SFF SC SSD	805385-001
240 GB SATA 6G RI SFF SC DS SSD	868924-001
240 GB SATA 6G RI SFF SC DS SSD	869576-001
240 GB SATA MU SFF SC DS SSD	882219-001
240 GB SATA MU SFF SC DS SSD	875703-001
240 GB SATA MU SFF SC SSD	817101-001
240 GB SATA RI SFF SC DS SSD	878844-001
240 GB SATA RI SFF SC DS SSD	875652-001
240 GB SATA RI SFF SC DS SSD	P05319-001
240 GB SATA RI SFF SC DS SSD	P08565-001
240 GB SATA RI SFF SC MV SSD	P18481-001
400 GB SATA 6G WI SFF SC DS SSD	872512-001
400 GB SATA WI SFF SC SSD	805387-001
480 GB SATA 6G MU SFF SC DS SSD	872518-001
480 GB SATA 6G RI SFF SC DS SSD	868926-001
480 GB SATA 6G RI SFF SC DS SSD	869577-001
480 GB SATA MU SFF SC DS SSD	879013-001
480 GB SATA MU SFF SC DS SSD	875863-001
480 GB SATA MU SFF SC DS SSD	P07923-B21
480 GB SATA MU SFF SC SSD	817106-001
480 GB SATA MU SFF SC DS SSD	P09907-001
480 GB SATA MU SFF SC DS SSD	P08620-001
480 GB SATA MU SFF SC DS SSD	P13808-001
480 GB SATA MU SFF SC MV SSD	P18477-001
480 GB SATA RI SFF SC DS SSD	878846-001
480 GB SATA RI SFF SC DS SSD	875655-001
480 GB SATA RI SFF SC DS SSD	P05320-001
480 GB SATA RI SFF SC DS SSD	P08567-001
480 GB SATA RI SFF SC MV SSD	P18482-001

Table Continued

Description	Spare part number
800 GB SATA 6G WI SFF SC DS SSD	872514-001
800 GB SATA WI SFF SC SSD	805389-001
960 GB SATA 6G MU SFF SC DS SSD	872520-001
960 GB SATA 6G RI SFF SC DS SSD	868928-001
960 GB SATA 6G RI SFF SC DS SSD	869580-001
960 GB SATA MU SFF SC DS SSD	879016-001
960 GB SATA MU SFF SC DS SSD	875865-001
960 GB SATA MU SFF SC DS SSD	P08692-001
960 GB SATA MU SFF SC SSD	817111-001
960 GB SATA MU SFF SC DS SSD	P09909-001
960 GB SATA MU SFF SC DS SSD	P08622-001
960 GB SATA MU SFF SC DS SSD	P13809-001
960 GB SATA MU SFF SC MV SSD	P18478-001
960 GB SATA RI SFF SC DS SSD	878849-001
960 GB SATA RI SFF SC DS SSD	875656-001
960 GB SATA RI SFF SC DS SSD	P05321-001
960 GB SATA RI SFF SC DS SSD	P08569-001
960 GB SATA RI SFF SC MV SSD	P18483-001
1.2 TB SATA WI SFF SC SSD	805391-001
1.6 TB SATA 6G RI SFF SC DS SSD	869581-001
1.6 TB SATA 6G WI SFF SC DS SSD	872516-001
1.92 TB SATA 6G MU SFF SC DS SSD	872522-001
1.92 TB SATA 6G RI SFF SC DS SSD	868930-001
1.92 TB SATA MU SFF SC DS SSD	879019-001
1.92 TB SATA MU SFF SC DS SSD	875867-001
1.92 TB SATA MU SFF SC DS SSD	P08694-001
1.92 TB SATA MU SFF SC SSD	817116-001
1.92 TB SATA MU SFF SC DS SSD	P09912-001
1.92 TB SATA MU SFF SC DS SSD	P08625-001
1.92 TB SATA MU SFF SC DS SSD	P13810-001
1.92 TB SATA MU SFF SC MV SSD	P18479-001
1.92 TB SATA RI SFF SC DS SSD	878852-001
1.92 TB SATA RI SFF SC DS SSD	875657-001

Table Continued

Description	Spare part number
1.92 TB SATA RI SFF SC DS SSD	P05322-001
1.92 TB SATA RI SFF SC DS SSD	P08572-001
1.92 TB SATA RI SFF SC MV SSD	P18484-001
3.84 TB SATA 6G RI SFF SC DS SSD	868932-001
3.84 TB SATA MU SFF SC DS SSD	P02562-001
3.84 TB SATA MU SFF SC DS SSD	P08632-001
3.84 TB SATA MU SFF SC DS SSD	P13811-001
3.84 TB SATA MU SFF SC DS SSD	P22588-001
3.84 TB SATA MU SFF SC MV SSD	P18480-001
3.84 TB SATA RI SFF SC DS SSD	878855-001
3.84 TB SATA RI SFF SC DS SSD	P05323-001
3.84 TB SATA RI SFF SC DS SSD	P08575-001
3.84 TB SATA RI SFF SC MV SSD	P18485-001
7.68 TB SATA RI SFF SC MV SSD	P18486-001

Solid-state drive SAS spare parts

Customer self repair: **Mandatory**

Description	Spare part number
400 GB SAS 12G MU SFF SC DS SSD	872505-001
400 GB SAS 12G MU SFF SC DS SSD	873566-001
400 GB SAS 12G WI SFF SC DS SSD	873563-001
480 GB SAS RI SFF SC DS SSD	875681-001
400 GB SAS MU SFF SC DS SSD	P06576-001
400 GB SAS MU SFF SC DS SSD	P09922-001
400 GB SAS WI SFF SC DS SSD	P06600-001
400 GB SAS WI SFF SC DS SSD	P09947-001
800 GB SAS 12G MU SFF SC DS SSD	872506-001
800 GB SAS 12G MU SFF SC DS SSD	873569-001
800 GB SAS 12G WI SFF SC DS SSD	873564-001
800 GB SAS MU SFF SC DS SSD	P06577-001
800 GB SAS MU SFF SC DS SSD	P09923-001
800 GB SAS MU SFF SC SSD	P20838-001
800 GB SAS WI SFF SC DS SSD	P06602-001
800 GB SAS WI SFF SC DS SSD	P09948-001

Table Continued

Description	Spare part number
960 GB SAS 12G RI SFF SC DS SSD	872432-001
960 GB SAS MU SFF SC VS DS SSD	P10604-001
960 GB SAS RI SFF SC DS SSD	875682-001
960 GB SAS RI SFF SC DS SSD	P08608-001
960 GB SAS RI SFF SC DS SSD	P06596-001
960 GB SAS RI SFF SC SSD	P20833-001
960 GB SAS RI SFF SC VS DS SSD	P10637-001
1.6 TB SAS 12G MU SFF SC DS SSD	872509-001
1.6 TB SAS 12G MU SFF SC DS SSD	873570-001
1.6 TB SAS MU SFF SC SSD	P20839-001
1.6 TB SAS 12G WI SFF SC DS SSD	873565-001
1.6 TB SAS WI SFF SC DS SSD	P09949-001
1.92 TB SAS 12G RI SFF SC DS SSD	872433-001
1.92 TB SAS MU SFF SC VS DS SSD	P10607-001
1.92 TB SAS RI SFF SC DS SSD	875684-001
1.92 TB SAS RI SFF SC DS SSD	P08609-001
1.92 TB SAS RI SFF SC DS SSD	P06597-001
1.92 TB SAS RI SFF SC SSD	P20834-001
1.92 TB SAS RI SFF SC VS DS SSD	P10638-001
3.2 TB SAS 12G MU SFF SC DS SSD	872511-001
3.2 TB SAS 12G MU SFF SC DS SSD	873571-001
3.2 TB SAS MU SFF SC DS SSD	P06582-001
3.2 TB SAS MU SFF SC DS SSD	P09925-001
3.2 TB SAS MU SFF SC SSD	P20840-001
3.2 TB SAS WI SFF SC DS SSD	P06605-001
3.84 TB SAS 12G RI SFF SC DS SSD	872434-001
3.84 TB SAS MU SFF SC VS DS SSD	P10610-001
3.84 TB SAS RI SFF SC DS SSD	875686-001
3.84 TB SAS RI SFF SC DS SSD	P08610-001
3.84 TB SAS RI SFF SC DS SSD	P06598-001
3.84 TB SAS RI SFF SC SSD	P20835-001
3.84 TB SAS RI SFF SC VS DS SSD	P10639-001
6.4 TB SAS MU SFF SC DS SSD	P06583-001

Table Continued

Description	Spare part number
6.4 TB SAS MU SFF SC DS SSD	P09926-001
6.4 TB SAS MU SFF SC SSD	P20841-001
7.68 TB SAS 12G RI SFF SC DS SSD	870460-001
7.68 TB SAS RI SFF SC DS SSD	P08611-001
7.68 TB SAS RI SFF SC DS SSD	P06599-001
7.68 TB SAS RI SFF SC SSD	P20836-001
7.68 TB SAS RI SFF SC VS DS SSD	P10640-001
15.3 TB SAS 12G RI SFF SC DS SSD	870462-001
15.3 TB SAS RI SFF SC DS SSD	P08612-001
15.3 TB SAS RI SFF SC SSD	P20837-001

Solid-state NVMe spare parts

Customer self repair: **Mandatory**

Description	Spare part number
375 GB NVMe x4 WI SFF SCN DS SSD	P02559-001
400 GB NVMe x4 MU SFF SCN DS SSD	875874-001
400 GB NVMe x4 MU SFF SCN SSD	765063-001
400 GB NVMe x4 RI SFF SCN SSD	765067-001
400 GB NVMe x4 WI SFF SC SSD	765059-001
480 GB NVMe x4 RI SFF SCN DS SSD	875871-001
750 GB NVMe x4 WI SFF SCN DS SSD	P06979-001
800 GB NVMe x4 MU SFF SCN DS SSD	875875-001
800 GB NVMe x4 MU SFF SCN SSD	765064-001
800 GB NVMe x4 WI SFF SCN SSD	765060-001
800 GB NVMe x4 MU SFF SCN DS SSD	P10648-001
800 GB NVMe x4 MU SFF SCN DS SSD	P13826-001
960 GB NVMe x4 RI SFF SCN DS SSD	P10645-001
960 GB NVMe x4 RI SFF SCN DS SSD	P10652-001
960 GB NVMe x4 RI SFF SCN DS SSD	P13831-001
1.2 TB NVMe x4 RI SFF SCN SSD	765068-001
1.6 TB NVMe x4 MU SFF SCN DS SSD	875876-001
1.6 TB NVMe x4 MU SFF SCN DS SSD	P10649-001
1.6 TB NVMe x4 MU SFF SCN DS SSD	P13835-001
1.6 TB NVMe x4 MU SFF SCN SSD	765065-001

Table Continued

Description	Spare part number
1.6 TB NVMe x4 MU SFF SCN DS SSD	P13827-001
1.6 TB NVMe x4 WI SFF SCN SSD	765061-001
1.92 TB NVMe x4 RI SFF SCN DS SSD	875873-001
1.92 TB NVMe x4 RI SFF SCN DS SSD	P10646-001
1.92 TB NVMe x4 RI SFF SCN DS SSD	P10466-001
1.92 TB NVMe x4 RI SFF SCN DS SSD	P10653-001
1.92 TB NVMe x4 RI SFF SCN DS SSD	P13832-001
2 TB NVMe x4 MU SFF SCN SSD	765066-001
2 TB NVMe x4 RI SFF SCN DS SSD	P13838-001
2 TB NVMe x4 WI SFF SCN SSD	765062-001
3.2 TB NVMe x4 MU SFF SCN DS SSD	880246-001
3.2 TB NVMe x4 MU SFF SCN DS SSD	P10471-001
3.2 TB NVMe x4 MU SFF SCN DS SSD	P10650-001
3.2 TB NVMe x4 MU SFF SCN DS SSD	P13836-001
3.2 TB NVMe x4 MU SFF SCN DS SSD	P13828-001
3.84 TB NVMe x4 RI SFF SCN DS SSD	P10647-001
3.84 TB NVMe x4 RI SFF SCN DS SSD	P10467-001
3.84 TB NVMe x4 RI SFF SCN DS SSD	P10654-001
3.84 TB NVMe x4 RI SFF SCN DS SSD	P13833-001
4 TB NVMe x4 RI SFF SCN DS SSD	880243-001
4 TB NVMe x4 RI SFF SCN DS SSD	P13839-001
6.4 TB NVMe x4 MU SFF SCN DS SSD	P10472-001
6.4 TB NVMe x4 MU SFF SCN DS SSD	P10651-001
6.4 TB NVMe x4 MU SFF SCN DS SSD	P13837-001
6.4 TB NVMe x4 MU SFF SCN DS SSD	P13829-001
7.68 TB NVMe x4 RI SFF SCN DS SSD	P10468-001
7.68 TB NVMe x4 RI SFF SCN DS SSD	P10655-001
7.68 TB NVMe x4 RI SFF SCN DS SSD	P13834-001
15.36 TB NVMe x4 RI SFF SCN DS SSD	P10656-001

Drive cage spare parts

Customer self repair: **Optional**

Description	Spare part number
Eight-bay SFF HDD drive cage assembly	780971-001
Eight-bay SFF HDD drive backplane, 12 Gbs	777279-001
Two-bay SFF NVMe SSD/Six-bay SFF HDD drive (premium) backplane	874933-001
Two-bay SFF (premium) backplane	875064-001
Eight-bay SFF NVMe drive backplane	872971-001

Chassis Intrusion Detection Switch spare part

Customer self repair: **Mandatory**

Description	Spare part number
Chassis Intrusion Detection Switch	878412-001

Accelerator and GPU spare parts

Customer self repair: **Optional**

GPUs

Description	Spare part number
HPE NVIDIA Quadro P6000 GPU Module	871968-001
HPE NVIDIA Tesla P40 24GB Module	872323-001
HPE NVIDIA Tesla V100 PCIe 16GB Module	876908-001
HPE NVIDIA Tesla P100 PCIe 16GB Module	868585-001
HPE NVIDIA Tesla V100 PCIe 32GB Module	P05913-001
HPE NVIDIA Quadro RTX 6000 GPU	P11377-001
HPE NVIDIA Quadro RTX 8000 GPU	P11743-001

PCIe accelerators

Description	Spare part number
HPE 750GB PCIe x4 WI HH DS Card	P03580-001
HPE 800GB PCIe x4 WI HH Card	804566-001
HPE 800GB PCIe x4 MU HH Card	804568-001
HPE 1.6TB PCIe x4 WI HH Card	804567-001
HPE 1.6TB PCIe x4 MU HH Card	804569-001
HPE 1.6TB PCIe x8 MU HH DS Card	879772-001

Table Continued

Description	Spare part number
HPE 2.0TB PCIe x4 MU HH Card	804570-001
HPE 3.2TB PCIe x8 MU HH DS Card	879773-001
HPE 4TB PCIe x4 RI HH DS Card	880418-001
HPE 6.4TB PCIe x8 MU HH DS Card	879774-001
HPE 8TB PCIe x4 RI HH DS Card	880419-001
HPE 1.6TB NVMe x8 MU HH DS Card	P10670-001
HPE 3.2TB NVMe x8 MU HH DS Card	P10671-001
HPE 6.4TB NVMe x8 MU HH DS Card	P10672-001

12G SAS expander board spare part

Customer self repair: **Optional**

Description	Spare part number
12G SAS expander board	876907-001

HPE Smart Storage Battery spare part

Customer self repair: **Mandatory**

Description	Spare part number
HPE Smart Storage Battery	878643-001

Power module/System Insight Display spare parts

Customer self repair: **Mandatory**

Description	Spare part number
Power module with Systems Insight Display	878734-001
Power module without Systems Insight Display	878733-001

CPU Mezzanine UPI performance kit spare part

Customer self repair: **Optional**

Description	Spare part number
CPU Mezzanine UPI performance kit board	877952-001

Universal media bay spare part

Customer self repair: **Mandatory**

Description	Spare part number
Universal media bay assembly	877958-001

Processor mezzanine tray spare part

Customer self repair: **Optional**

Description	Spare part number
Processor mezzanine tray	P11742-001

4-port NVMe mezzanine card spare part

Customer self repair: **Optional**

Description	Spare part number
4-port NVMe mezzanine card	877951-001

HPE Trusted Platform Module 2.0 spare part

Customer self repair: **No**

Description	Spare part number
HPE Trusted Platform Module 2.0 Gen 10 kit, TAA	872159-001

microSD spare parts

Customer self repair: **Mandatory**

Description	Spare part number
HPE 32GB microSD Flash Memory card	704502-001
HPE 8GB microSD Flash Memory card	738576-001
HPE 8GB microSD Flash USB drive	743503-001
HPE 8GB dual microSD Flash USB drive	870891-001
HPE 32GB microSD RAID 1 USB boot drive	P23103-001

Cable spare parts

Customer self repair: **Mandatory**

Description	Spare part number
2SFF cable kit	877963-001
Mini SAS cable kit (SAS Expander)	877981-001

Table Continued

Description	Spare part number
USB 3.0 Ext. 600 mm+SAS power backplane cable kit	881699-001
Mini SAS/SATA 1041 mm+900 mm cable kit	881700-001
Mini SAS 970 mm+820 mm cable kit	881701-001
Mini SAS/SATA 1x4-1x4 cable	881702-001
NVMe Cable Kit	877983-001
NVMe Cable Kit	881703-001
28 AWG, 3 Pin, PCI to Controller power cable (short)	878645-001
Mini SAS-to-Mini SAS HD, 12G cable kit	P03215-001
GPU Cable Kit[1]	875097-001
JMP CRD C13/C14 India 2.0M BLK cable	P10794-001

[1] One cable kit supports up to three GPU cards.

Customer self repair

Hewlett Packard Enterprise products are designed with many Customer Self Repair (CSR) parts to minimize repair time and allow for greater flexibility in performing defective parts replacement. If during the diagnosis period Hewlett Packard Enterprise (or Hewlett Packard Enterprise service providers or service partners) identifies that the repair can be accomplished by the use of a CSR part, Hewlett Packard Enterprise will ship that part directly to you for replacement. There are two categories of CSR parts:

- **Mandatory**—Parts for which customer self repair is mandatory. If you request Hewlett Packard Enterprise to replace these parts, you will be charged for the travel and labor costs of this service.
- **Optional**—Parts for which customer self repair is optional. These parts are also designed for customer self repair. If, however, you require that Hewlett Packard Enterprise replace them for you, there may or may not be additional charges, depending on the type of warranty service designated for your product.

NOTE: Some Hewlett Packard Enterprise parts are not designed for customer self repair. In order to satisfy the customer warranty, Hewlett Packard Enterprise requires that an authorized service provider replace the part. These parts are identified as "No" in the Illustrated Parts Catalog.

Based on availability and where geography permits, CSR parts will be shipped for next business day delivery. Same day or four-hour delivery may be offered at an additional charge where geography permits. If assistance is required, you can call the Hewlett Packard Enterprise Support Center and a technician will help you over the telephone. Hewlett Packard Enterprise specifies in the materials shipped with a replacement CSR part whether a defective part must be returned to Hewlett Packard Enterprise. In cases where it is required to return the defective part to Hewlett Packard Enterprise, you must ship the defective part back to Hewlett Packard Enterprise within a defined period of time, normally five (5) business days. The defective part must be returned with the associated documentation in the provided shipping material. Failure to return the defective part may result in Hewlett Packard Enterprise billing you for the replacement. With a customer self repair, Hewlett Packard Enterprise will pay all shipping and part return costs and determine the courier/carrier to be used.

For more information about the Hewlett Packard Enterprise CSR program, contact your local service provider.

Parts only warranty service

Your Hewlett Packard Enterprise Limited Warranty may include a parts only warranty service. Under the terms of parts only warranty service, Hewlett Packard Enterprise will provide replacement parts free of charge.

For parts only warranty service, CSR part replacement is mandatory. If you request Hewlett Packard Enterprise to replace these parts, you will be charged for the travel and labor costs of this service.

Réparation par le client (CSR)

Les produits Hewlett Packard Enterprise comportent de nombreuses pièces CSR (Customer Self Repair = réparation par le client) afin de minimiser les délais de réparation et faciliter le remplacement des pièces défectueuses. Si pendant la période de diagnostic, Hewlett Packard Enterprise (ou ses partenaires ou mainteneurs agréés) détermine que la réparation peut être effectuée à l'aide d'une pièce CSR, Hewlett Packard Enterprise vous l'envoie directement. Il existe deux catégories de pièces CSR :

- **Obligatoire—**Pièces pour lesquelles la réparation par le client est obligatoire. Si vous demandez à Hewlett Packard Enterprise de remplacer ces pièces, les coûts de déplacement et main d'œuvre du service vous seront facturés.
- **Facultatif—**Pièces pour lesquelles la réparation par le client est facultative. Ces pièces sont également conçues pour permettre au client d'effectuer lui-même la réparation. Toutefois, si vous demandez à Hewlett Packard Enterprise de remplacer ces pièces, l'intervention peut ou non vous être facturée, selon le type de garantie applicable à votre produit.

REMARQUE: Certaines pièces Hewlett Packard Enterprise ne sont pas conçues pour permettre au client d'effectuer lui-même la réparation. Pour que la garantie puisse s'appliquer, Hewlett Packard Enterprise exige que le remplacement de la pièce soit effectué par un Mainteneur Agréé. Ces pièces sont identifiées par la mention "Non" dans le Catalogue illustré.

Les pièces CSR sont livrées le jour ouvré suivant, dans la limite des stocks disponibles et selon votre situation géographique. Si votre situation géographique le permet et que vous demandez une livraison le jour même ou dans les 4 heures, celle-ci vous sera facturée. Pour toute assistance, appelez le Centre d'assistance Hewlett Packard Enterprise pour qu'un technicien vous aide au téléphone Dans les documents envoyés avec la pièce de rechange CSR, Hewlett Packard Enterprise précise s'il est nécessaire de lui retourner la pièce défectueuse. Si c'est le cas, vous devez le faire dans le délai indiqué, généralement cinq (5) jours ouvrés. La pièce et sa documentation doivent être retournées dans l'emballage fourni. Si vous ne retournez pas la pièce défectueuse, Hewlett Packard Enterprise se réserve le droit de vous facturer les coûts de remplacement. Dans le cas d'une pièce CSR, Hewlett Packard Enterprise supporte l'ensemble des frais d'expédition et de retour, et détermine la société de courses ou le transporteur à utiliser.

Pour plus d'informations sur le programme CSR de Hewlett Packard Enterprise, contactez votre Mainteneur Agrée local.

Service de garantie "pièces seules"

Votre garantie limitée Hewlett Packard Enterprise peut inclure un service de garantie "pièces seules". Dans ce cas, les pièces de rechange fournies par Hewlett Packard Enterprise ne sont pas facturées.

Dans le cadre de ce service, la réparation des pièces CSR par le client est obligatoire. Si vous demandez à Hewlett Packard Enterprise de remplacer ces pièces, les coûts de déplacement et main d'œuvre du service vous seront facturés.

Riparazione da parte del cliente

Per abbreviare i tempi di riparazione e garantire una maggiore flessibilità nella sostituzione di parti difettose, i prodotti Hewlett Packard Enterprise sono realizzati con numerosi componenti che possono essere riparati direttamente dal cliente (CSR, Customer Self Repair). Se in fase di diagnostica Hewlett Packard Enterprise (o un centro di servizi o di assistenza Hewlett Packard Enterprise) identifica il guasto come riparabile mediante un ricambio CSR, Hewlett Packard Enterprise lo spedirà direttamente al cliente per la sostituzione. Vi sono due categorie di parti CSR:

- **Obbligatorie—**Parti che devono essere necessariamente riparate dal cliente. Se il cliente ne affida la riparazione ad Hewlett Packard Enterprise, deve sostenere le spese di spedizione e di manodopera per il servizio.
- **Opzionali—**Parti la cui riparazione da parte del cliente è facoltativa. Si tratta comunque di componenti progettati per questo scopo. Se tuttavia il cliente ne richiede la sostituzione ad Hewlett Packard Enterprise, potrebbe dover sostenere spese addizionali a seconda del tipo di garanzia previsto per il prodotto.

NOTA: alcuni componenti Hewlett Packard Enterprise non sono progettati per la riparazione da parte del cliente. Per rispettare la garanzia, Hewlett Packard Enterprise richiede che queste parti siano sostituite da un centro di assistenza autorizzato. Tali parti sono identificate da un "No" nel Catalogo illustrato dei componenti.

In base alla disponibilità e alla località geografica, le parti CSR vengono spedite con consegna entro il giorno lavorativo seguente. La consegna nel giorno stesso o entro quattro ore è offerta con un supplemento di costo solo in alcune zone. In caso di necessità si può richiedere l'assistenza telefonica di un addetto del centro di supporto tecnico Hewlett Packard Enterprise. Nel materiale fornito con una parte di ricambio CSR, Hewlett Packard Enterprise specifica se il cliente deve restituire dei component. Qualora sia richiesta la resa ad Hewlett Packard Enterprise del componente difettoso, lo si deve spedire ad Hewlett Packard Enterprise entro un determinato periodo di tempo, generalmente cinque (5) giorni lavorativi. Il componente difettoso deve essere restituito con la documentazione associata nell'imballo di spedizione fornito. La mancata restituzione del componente può comportare la fatturazione del ricambio da parte di Hewlett Packard Enterprise. Nel caso di riparazione da parte del cliente, Hewlett Packard Enterprise sostiene tutte le spese di spedizione e resa e sceglie il corriere/vettore da utilizzare.

Per ulteriori informazioni sul programma CSR di Hewlett Packard Enterprise, contattare il centro di assistenza di zona.

Servizio di garanzia per i soli componenti

La garanzia limitata Hewlett Packard Enterprise può includere un servizio di garanzia per i soli componenti. Nei termini di garanzia del servizio per i soli componenti, Hewlett Packard Enterprise fornirà gratuitamente le parti di ricambio.

Per il servizio di garanzia per i soli componenti è obbligatoria la formula CSR che prevede la riparazione da parte del cliente. Se il cliente invece richiede la sostituzione ad Hewlett Packard Enterprise dovrà sostenere le spese di spedizione e di manodopera per il servizio.

Customer Self Repair

Hewlett Packard Enterprise Produkte enthalten viele CSR-Teile (Customer Self Repair), um Reparaturzeiten zu minimieren und höhere Flexibilität beim Austausch defekter Bauteile zu ermöglichen. Wenn Hewlett Packard Enterprise (oder ein Hewlett Packard Enterprise Servicepartner) bei der Diagnose feststellt, dass das Produkt mithilfe eines CSR-Teils repariert werden kann, sendet Ihnen Hewlett Packard Enterprise dieses Bauteil zum Austausch direkt zu. CSR-Teile werden in zwei Kategorien unterteilt:

- **Zwingend**—Teile, für die das Customer Self Repair-Verfahren zwingend vorgegeben ist. Wenn Sie den Austausch dieser Teile von Hewlett Packard Enterprise vornehmen lassen, werden Ihnen die Anfahrt- und Arbeitskosten für diesen Service berechnet.
- **Optional**—Teile, für die das Customer Self Repair-Verfahren optional ist. Diese Teile sind auch für Customer Self Repair ausgelegt. Wenn Sie jedoch den Austausch dieser Teile von Hewlett Packard Enterprise vornehmen lassen möchten, können bei diesem Service je nach den für Ihr Produkt vorgesehenen Garantiebedingungen zusätzliche Kosten anfallen.

HINWEIS: Einige Hewlett Packard Enterprise Teile sind nicht für Customer Self Repair ausgelegt. Um den Garantieanspruch des Kunden zu erfüllen, muss das Teil von einem Hewlett Packard Enterprise Servicepartner ersetzt werden. Im illustrierten Teilekatalog sind diese Teile mit „No“ bzw. „Nein“ gekennzeichnet.

CSR-Teile werden abhängig von der Verfügbarkeit und vom Lieferziel am folgenden Geschäftstag geliefert. Für bestimmte Standorte ist eine Lieferung am selben Tag oder innerhalb von vier Stunden gegen einen Aufpreis verfügbar. Wenn Sie Hilfe benötigen, können Sie das Hewlett Packard Enterprise Support Center anrufen und sich von einem Mitarbeiter per Telefon helfen lassen. Den Materialien von Hewlett Packard Enterprise, die mit einem CSR-Ersatzteil geliefert werden, können Sie entnehmen, ob das defekte Teil an Hewlett Packard Enterprise zurückgeschickt werden muss. Wenn es erforderlich ist, das defekte Teil an Hewlett Packard Enterprise zurückzuschicken, müssen Sie dies innerhalb eines vorgegebenen Zeitraums tun, in der Regel innerhalb von fünf (5) Geschäftstagen. Das defekte Teil muss mit der zugehörigen Dokumentation in der Verpackung zurückgeschickt werden, die im Lieferumfang enthalten ist. Wenn Sie das defekte Teil nicht zurückschicken, kann Hewlett Packard Enterprise Ihnen das Ersatzteil in Rechnung stellen. Im Falle von Customer Self Repair kommt Hewlett Packard Enterprise für alle Kosten für die Lieferung und Rücksendung auf und bestimmt den Kurier-/Frachtdienst.

Weitere Informationen über das Hewlett Packard Enterprise Customer Self Repair Programm erhalten Sie von Ihrem Servicepartner vor Ort.

Parts-only Warranty Service (Garantieservice ausschließlich für Teile)

Ihre Hewlett Packard Enterprise Garantie umfasst möglicherweise einen Parts-only Warranty Service (Garantieservice ausschließlich für Teile). Gemäß den Bestimmungen des Parts-only Warranty Service stellt Hewlett Packard Enterprise Ersatzteile kostenlos zur Verfügung.

Für den Parts-only Warranty Service ist das CSR-Verfahren zwingend vorgegeben. Wenn Sie den Austausch dieser Teile von Hewlett Packard Enterprise vornehmen lassen, werden Ihnen die Anfahrt- und Arbeitskosten für diesen Service berechnet.

Reparaciones del propio cliente

Los productos de Hewlett Packard Enterprise incluyen muchos componentes que el propio usuario puede reemplazar (Customer Self Repair, CSR) para minimizar el tiempo de reparación y ofrecer una mayor flexibilidad a la hora de realizar sustituciones de componentes defectuosos. Si, durante la fase de diagnóstico, Hewlett Packard Enterprise (o los proveedores o socios de servicio de Hewlett Packard Enterprise) identifica que una reparación puede llevarse a cabo mediante el uso de un componente CSR, Hewlett Packard Enterprise le enviará dicho componente directamente para que realice su sustitución. Los componentes CSR se clasifican en dos categorías:

- **Obligatorio**—Componentes cuya reparación por parte del usuario es obligatoria. Si solicita a Hewlett Packard Enterprise que realice la sustitución de estos componentes, tendrá que hacerse cargo de los gastos de desplazamiento y de mano de obra de dicho servicio.
- **Opcional**—Componentes cuya reparación por parte del usuario es opcional. Estos componentes también están diseñados para que puedan ser reparados por el usuario. Sin embargo, si precisa que Hewlett Packard Enterprise realice su sustitución, puede o no conllevar costes adicionales, dependiendo del tipo de servicio de garantía correspondiente al producto.

NOTA: Algunos componentes de Hewlett Packard Enterprise no están diseñados para que puedan ser reparados por el usuario. Para que el usuario haga valer su garantía, Hewlett Packard Enterprise pone como condición que un proveedor de servicios autorizado realice la sustitución de estos componentes. Dichos componentes se identifican con la palabra "No" en el catálogo ilustrado de componentes.

Según la disponibilidad y la situación geográfica, los componentes CSR se enviarán para que lleguen a su destino al siguiente día laborable. Si la situación geográfica lo permite, se puede solicitar la entrega en el mismo día o en cuatro horas con un coste adicional. Si precisa asistencia técnica, puede llamar al Centro de asistencia técnica de Hewlett Packard Enterprise y recibirá ayuda telefónica por parte de un técnico. Con el envío de materiales para la sustitución de componentes CSR, Hewlett Packard Enterprise especificará si los componentes defectuosos deberán devolverse a Hewlett Packard Enterprise. En aquellos casos en los que sea necesario devolver algún componente a Hewlett Packard Enterprise, deberá hacerlo en el periodo de tiempo especificado, normalmente cinco días laborables. Los componentes defectuosos deberán devolverse con toda la documentación relacionada y con el embalaje de envío. Si no enviara el componente defectuoso requerido, Hewlett Packard Enterprise podrá cobrarle por el de sustitución. En el caso de todas sustituciones que lleve a cabo el cliente, Hewlett Packard Enterprise se hará cargo de todos los gastos de envío y devolución de componentes y escogerá la empresa de transporte que se utilice para dicho servicio.

Para obtener más información acerca del programa de Reparaciones del propio cliente de Hewlett Packard Enterprise, póngase en contacto con su proveedor de servicios local.

Servicio de garantía exclusivo de componentes

La garantía limitada de Hewlett Packard Enterprise puede que incluya un servicio de garantía exclusivo de componentes. Según las condiciones de este servicio exclusivo de componentes, Hewlett Packard Enterprise le facilitará los componentes de repuesto sin cargo adicional alguno.

Para este servicio de garantía exclusivo de componentes, es obligatoria la sustitución de componentes por parte del usuario (CSR). Si solicita a Hewlett Packard Enterprise que realice la sustitución de estos componentes, tendrá que hacerse cargo de los gastos de desplazamiento y de mano de obra de dicho servicio.

Customer Self Repair

Veel onderdelen in Hewlett Packard Enterprise producten zijn door de klant zelf te repareren, waardoor de reparatieduur tot een minimum beperkt kan blijven en de flexibiliteit in het vervangen van defecte onderdelen groter is. Deze onderdelen worden CSR-onderdelen (Customer Self Repair) genoemd. Als Hewlett Packard Enterprise (of een Hewlett Packard Enterprise Service Partner) bij de diagnose vaststelt dat de reparatie kan worden uitgevoerd met een CSR-onderdeel, verzendt Hewlett Packard Enterprise dat onderdeel rechtstreeks naar u, zodat u het defecte onderdeel daarmee kunt vervangen. Er zijn twee categorieën CSR-onderdelen:

- **Verplicht**—Onderdelen waarvoor reparatie door de klant verplicht is. Als u Hewlett Packard Enterprise verzoekt deze onderdelen voor u te vervangen, worden u voor deze service reiskosten en arbeidsloon in rekening gebracht.
- **Optioneel**—Onderdelen waarvoor reparatie door de klant optioneel is. Ook deze onderdelen zijn ontworpen voor reparatie door de klant. Als u echter Hewlett Packard Enterprise verzoekt deze onderdelen voor u te vervangen, kunnen daarvoor extra kosten in rekening worden gebracht, afhankelijk van het type garantieservice voor het product.

OPMERKING: Sommige Hewlett Packard Enterprise onderdelen zijn niet ontwikkeld voor reparatie door de klant. In verband met de garantievoorwaarden moet het onderdeel door een geautoriseerde Service Partner worden vervangen. Deze onderdelen worden in de geïllustreerde onderdelencatalogus aangemerkt met "Nee".

Afhankelijk van de leverbaarheid en de locatie worden CSR-onderdelen verzonden voor levering op de eerstvolgende werkdag. Levering op dezelfde dag of binnen vier uur kan tegen meerkosten worden aangeboden, indien dit mogelijk is gezien de locatie. Indien assistentie is gewenst, belt u het Hewlett Packard Enterprise Support Center om via de telefoon ondersteuning van een technicus te ontvangen. Hewlett Packard Enterprise vermeldt in de documentatie bij het vervangende CSR-onderdeel of het defecte onderdeel aan Hewlett Packard Enterprise moet worden geretourneerd. Als het defecte onderdeel aan Hewlett Packard Enterprise moet worden teruggezonden, moet u het defecte onderdeel binnen een bepaalde periode, gewoonlijk vijf (5) werkdagen, retourneren aan Hewlett Packard Enterprise. Het defecte onderdeel moet met de bijbehorende documentatie worden geretourneerd in het meegeleverde verpakkingsmateriaal. Als u het defecte onderdeel niet terugzendt, kan Hewlett Packard Enterprise u voor het vervangende onderdeel kosten in rekening brengen. Bij reparatie door de klant betaalt Hewlett Packard Enterprise alle verzendkosten voor het vervangende en geretourneerde onderdeel en kiest Hewlett Packard Enterprise zelf welke koerier/transportonderneming hiervoor wordt gebruikt.

Neem contact op met een Service Partner voor meer informatie over het Customer Self Repair programma van Hewlett Packard Enterprise.

Garantieservice "Parts Only"

Het is mogelijk dat de Hewlett Packard Enterprise garantie alleen de garantieservice "Parts Only" omvat. Volgens de bepalingen van de Parts Only garantieservice zal Hewlett Packard Enterprise kosteloos vervangende onderdelen ter beschikking stellen.

Voor de Parts Only garantieservice is vervanging door CSR-onderdelen verplicht. Als u Hewlett Packard Enterprise verzoekt deze onderdelen voor u te vervangen, worden u voor deze service reiskosten en arbeidsloon in rekening gebracht

Reparo feito pelo cliente

Os produtos da Hewlett Packard Enterprise são projetados com muitas peças para reparo feito pelo cliente (CSR) de modo a minimizar o tempo de reparo e permitir maior flexibilidade na substituição de peças com defeito. Se, durante o período de diagnóstico, a Hewlett Packard Enterprise (ou fornecedores/parceiros da Hewlett Packard Enterprise) concluir que o reparo pode ser efetuado pelo uso de uma peça CSR, a Hewlett Packard Enterprise enviará a peça diretamente ao cliente. Há duas categorias de peças CSR:

- **Obrigatória**—Peças cujo reparo feito pelo cliente é obrigatório. Se desejar que a Hewlett Packard Enterprise substitua essas peças, serão cobradas as despesas de transporte e mão-de-obra do serviço.
- **Opcional**—Peças cujo reparo feito pelo cliente é opcional. Essas peças também são projetadas para o reparo feito pelo cliente. No entanto, se desejar que a Hewlett Packard Enterprise as substitua, pode haver ou não a cobrança de taxa adicional, dependendo do tipo de serviço de garantia destinado ao produto.

OBSERVAÇÃO: Algumas peças da Hewlett Packard Enterprise não são projetadas para o reparo feito pelo cliente. A fim de cumprir a garantia do cliente, a Hewlett Packard Enterprise exige que um técnico autorizado substitua a peça. Essas peças estão identificadas com a marca "No" (Não), no catálogo de peças ilustrado.

Conforme a disponibilidade e o local geográfico, as peças CSR serão enviadas no primeiro dia útil após o pedido. Onde as condições geográficas permitirem, a entrega no mesmo dia ou em quatro horas pode ser feita mediante uma taxa adicional. Se precisar de auxílio, entre em contato com o Centro de suporte técnico da Hewlett Packard Enterprise para que um técnico o ajude por telefone. A Hewlett Packard Enterprise especifica nos materiais fornecidos com a peça CSR de reposição se a peça com defeito deve ser devolvida à Hewlett Packard Enterprise. Nos casos em que isso for necessário, é preciso enviar a peça com defeito à Hewlett Packard Enterprise, você deverá enviar a peça com defeito de volta para a Hewlett Packard Enterprise dentro do período de tempo definido, normalmente em 5 (cinco) dias úteis. A peça com defeito deve ser enviada com a documentação correspondente no material de transporte fornecido. Caso não o faça, a Hewlett Packard Enterprise poderá cobrar a reposição. Para as peças de reparo feito pelo cliente, a Hewlett Packard Enterprise paga todas as despesas de transporte e de devolução da peça e determina a transportadora/serviço postal a ser utilizado.

Para obter mais informações sobre o programa de reparo feito pelo cliente da Hewlett Packard Enterprise, entre em contato com o fornecedor de serviços local.

Serviço de garantia apenas para peças

A garantia limitada da Hewlett Packard Enterprise pode incluir um serviço de garantia apenas para peças. Segundo os termos do serviço de garantia apenas para peças, a Hewlett Packard Enterprise fornece as peças de reposição sem cobrar nenhuma taxa.

No caso desse serviço, a substituição de peças CSR é obrigatória. Se desejar que a Hewlett Packard Enterprise substitua essas peças, serão cobradas as despesas de transporte e mão-de-obra do serviço.

カスタマーセルフリペア

修理時間を短縮し、故障部品の交換における高い柔軟性を確保するために、Hewlett Packard Enterprise製品には多数のカスタマーセルフリペア（CSR）部品があります。診断の際に、CSR部品を使用すれば修理ができるとHewlett Packard Enterprise（Hewlett Packard EnterpriseまたはHewlett Packard Enterprise正規保守代理店）が判断した場合、Hewlett Packard Enterpriseはその部品を直接、お客様に発送し、お客様に交換していただきます。CSR部品には以下の2種類があります。

- **必須** - カスタマーセルフリペアが必須の部品。当該部品について、もしもお客様がHewlett Packard Enterpriseに交換作業を依頼される場合には、その修理サービスに関する交通費および人件費がお客様に請求されます。
- **任意** - カスタマーセルフリペアが任意である部品。この部品もカスタマーセルフリペア用です。当該部品について、もしもお客様がHewlett Packard Enterpriseに交換作業を依頼される場合には、お買い上げの製品に適用される保証サービス内容の範囲内においては、別途費用を負担していただくことなく保証サービスを受けることができます。

注：Hewlett Packard Enterprise製品の一部の部品は、カスタマーセルフリペアの対象外です。製品の保証を継続するためには、Hewlett Packard EnterpriseまたはHewlett Packard Enterprise正規保守代理店による交換作業が必須となります。部品カタログには、当該部品がカスタマーセルフリペア除外品である旨が記載されています。

部品供給が可能な場合、地域によっては、CSR部品を翌営業日に届くように発送します。また、地域によっては、追加費用を負担いただくことにより同日または4時間以内に届くように発送することも可能な場合があります。サポートが必要なときは、Hewlett Packard Enterpriseサポートセンターに電話していただければ、技術者が電話でアドバイスします。交換用のCSR部品または同梱物には、故障部品をHewlett Packard Enterpriseに返送する必要があるかどうかが表示されています。故障部品をHewlett Packard Enterpriseに返送する必要がある場合は、指定期限内（通常は5営業日以内）に故障部品をHewlett Packard Enterpriseに返送してください。故障部品を返送する場合は、届いた時の梱包箱に関連書類とともに入れてください。故障部品を返送しない場合、Hewlett Packard Enterpriseから部品費用が請求されます。カスタマーセルフリペアの際には、Hewlett Packard Enterpriseは送料および部品返送費を全額負担し、使用する宅配便会社や運送会社を指定します。

部品のみ保証サービス

Hewlett Packard Enterprise保証サービスには、部品のみ保証サービスが適用される場合があります。このサービスでは、交換部品は無償で提供されます。

部品のみ保証サービスにおいては、CSR部品をお客様により交換作業していただくことが必須になります。当該部品について、もしもお客様がHewlett Packard Enterpriseに交換作業を依頼される場合には、その修理サービスに関する交通費および人件費がお客様のご負担となります。

客户自行维修

Hewlett Packard Enterprise 产品提供许多客户自行维修 (CSR) 部件，以尽可能缩短维修时间和在更换缺陷部件方面提供更大的灵活性。如果在诊断期间 Hewlett Packard Enterprise（或Hewlett Packard Enterprise 服务提供商或服务合作伙伴）确定可以通过使用 CSR 部件完成维修，Hewlett Packard Enterprise 将直接把该部件发送给您进行更换。有两类 CSR 部件：

- **强制性的** — 要求客户必须自行维修的部件。如果您请求 Hewlett Packard Enterprise 更换这些部件，则必须为该服务支付差旅费和人工费用。
- **可选的** — 客户可以选择是否自行维修的部件。这些部件也是为客户自行维修设计的。不过，如果您要求 Hewlett Packard Enterprise 为您更换这些部件，则根据为您的产品指定的保修服务类型，Hewlett Packard Enterprise 可能收取或不再收取任何附加费用。

注：某些 Hewlett Packard Enterprise 部件的设计并未考虑客户自行维修。为了满足客户保修的需要，Hewlett Packard Enterprise 要求授权服务提供商更换相关部件。这些部件在部件图解目录中标记为“否”。

CSR 部件将在下一个工作日发运（取决于备货情况和允许的地理范围）。在允许的地理范围内，可在当天或四小时内发运，但要收取额外费用。如果需要帮助，您可以致电 Hewlett Packard Enterprise 技术支持中心，将会有技术人员通过电话为您提供帮助。Hewlett Packard Enterprise 会在随更换的 CSR 部件发运的材料中指明是否必须将有缺陷的部件返还给 Hewlett Packard Enterprise。如果要求您将有缺陷的部件返还给 Hewlett Packard Enterprise，那么您必须在规定的期限内（通常是五 (5) 个工作日）将缺陷部件发给 Hewlett Packard Enterprise。有缺陷的部件必须随所提供的发运材料中的相关文件一起返还。如果未能送还有缺陷的部件，Hewlett Packard Enterprise 可能会要求您支付更换费用。客户自行维修时，Hewlett Packard Enterprise 将承担所有相关运输和部件返回费用，并指定快递商/承运商。

有关 Hewlett Packard Enterprise 客户自行维修计划的详细信息，请与您当地的服务提供商联系。

仅部件保修服务

您的 Hewlett Packard Enterprise 有限保修服务可能涉及仅部件保修服务。根据仅部件保修服务条款的规定，Hewlett Packard Enterprise 将免费提供更换的部件。

仅部件保修服务要求进行 CSR 部件更换。如果您请求 Hewlett Packard Enterprise 更换这些部件，则必须为该服务支付差旅费和人工费用。

客戶自行維修

Hewlett Packard Enterprise 產品設計了許多「客戶自行維修」(CSR) 的零件以減少維修時間，並且使得更換瑕疵零件時能有更大的彈性。如果在診斷期間，Hewlett Packard Enterprise (或 Hewlett Packard Enterprise 服務供應商或維修夥伴) 辨認出此項維修工作可以藉由使用 CSR 零件來完成，則 Hewlett Packard Enterprise 將直接寄送該零件給您作更換。CSR 零件分為兩種類別：

- **強制的** — 客戶自行維修所使用的零件是強制性的。如果您要求 Hewlett Packard Enterprise 更換這些零件，Hewlett Packard Enterprise 將會向您收取此服務所需的外出費用與勞動成本。
- **選購的** — 客戶自行維修所使用的零件是選購的。這些零件也設計用於客戶自行維修之用。不過，如果您要求 Hewlett Packard Enterprise 為您更換，則可能需要也可能不需要負擔額外的費用，端視針對此產品指定的保固服務類型而定。

備註：某些 Hewlett Packard Enterprise 零件沒有消費者可自行維修的設計。為符合客戶保固，Hewlett Packard Enterprise 需要授權的服務供應商更換零件。這些零件在圖示的零件目錄中，被標示為「否」。

基於材料取得及環境允許的情況下，CSR 零件將於下一個工作日以快遞寄送。在環境的允許下當天或四小時內送達，則可能需要額外的費用。若您需要協助，可致電 Hewlett Packard Enterprise 支援中心，會有一位技術人員透過電話來協助您。不論損壞的零件是否必須退回，Hewlett Packard Enterprise 皆會在與 CSR 替換零件一起運送的材料中註明。若要將損壞的零件退回 Hewlett Packard Enterprise，您必須在指定的一段時間內 (通常為五 (5) 個工作天)，將損壞的零件寄回 Hewlett Packard Enterprise。損壞的零件必須與寄送資料中隨附的相關技術文件一併退還。如果無法退還損壞的零件，Hewlett Packard Enterprise 可能要向您收取替換費用。針對客戶自行維修情形，Hewlett Packard Enterprise 將負責所有運費及零件退還費用，並指定使用何家快遞/貨運公司。

如需 Hewlett Packard Enterprise 的 CSR 方案詳細資訊，請連絡您當地的服務供應商。

僅限零件的保固服務

您的「Hewlett Packard Enterprise 有限保固」可能包含僅限零件的保固服務。在僅限零件的保固服務情況下，Hewlett Packard Enterprise 將免費提供替換零件。

針對僅限零件的保固服務，CSR 零件替換是強制性的。如果您要求 Hewlett Packard Enterprise 更換這些零件，Hewlett Packard Enterprise 將會向您收取此服務所需的外出費用與勞動成本。

고객 셀프 수리

Hewlett Packard Enterprise 제품은 수리 시간을 최소화하고 결함이 있는 부품 교체 시 더욱 융통성을 발휘할 수 있도록 하기 위해 고객 셀프 수리(CSR) 부품을 다량 사용하여 설계되었습니다. 진단 기간 동안 Hewlett Packard Enterprise(또는 Hewlett Packard Enterprise 서비스 공급업체 또는 서비스 협력업체)에서 CSR 부품을 사용하여 수리가 가능하다고 판단되면 Hewlett Packard Enterprise는 해당 부품을 바로 사용자에게 보내어 사용자가 교체할 수 있도록 합니다. CSR 부품에는 두 가지 종류가 있습니다.

- **필수** - 고객 셀프 수리가 의무 사항인 필수 부품. 사용자가 Hewlett Packard Enterprise에 이 부품의 교체를 요청할 경우 이 서비스에 대한 출장비 및 작업비가 청구됩니다.
- **선택 사항** - 고객 셀프 수리가 선택 사항인 부품. 이 부품들도 고객 셀프 수리가 가능하도록 설계되었습니다. 하지만 사용자가 Hewlett Packard Enterprise에 이 부품의 교체를 요청할 경우 사용자가 구입한 제품에 해당하는 보증 서비스 유형에 따라 추가 비용 없이 교체가 가능할 수 있습니다.

참고: 일부 Hewlett Packard Enterprise 부품은 고객 셀프 수리가 불가능하도록 설계되었습니다. Hewlett Packard Enterprise는 만족스러운 고객 보증을 위해 공인 서비스 제공업체를 통해 부품을 교체하도록 하고 있습니다. 이러한 부품들은 Illustrated Parts Catalog에 "No"라고 표시되어 있습니다.

CSR 부품은 재고 상태와 지리적 조건이 허용하는 경우 다음 영업일 납품이 가능하도록 배송이 이루어집니다. 지리적 조건이 허용하는 경우 추가 비용이 청구되는 조건으로 당일 또는 4시간 배송이 가능할 수도 있습니다. 도움이 필요하시면 Hewlett Packard Enterprise Support Center로 전화하십시오. 전문 기술자가 전화로 도움을 줄 것입니다. Hewlett Packard Enterprise는 결함이 발생한 부품을 Hewlett Packard Enterprise로 반환해야 하는지 여부를 CSR 교체 부품과 함께 배송된 자료에 지정합니다. 결함이 발생한 부품을 Hewlett Packard Enterprise로 반환해야 하는 경우에는 지정된 기간 내(통상 영업일 기준 5일)에 Hewlett Packard Enterprise로 반환해야 합니다. 이때 결함이 발생한 부품은 제공된 포장 재료에 넣어 관련 설명서와 함께 반환해야 합니다. 결함이 발생한 부품을 반환하지 않는 경우 Hewlett Packard Enterprise가 교체 부품에 대해 비용을 청구할 수 있습니다. 고객 셀프 수리의 경우, Hewlett Packard Enterprise는 모든 운송 및 부품 반환 비용을 부담하며 이용할 운송업체 및 택배 서비스를 결정합니다.

Hewlett Packard Enterprise CSR 프로그램에 대한 자세한 내용은 가까운 서비스 제공업체에 문의하십시오.

부품 제공 보증 서비스

Hewlett Packard Enterprise 제한 보증에는 부품 제공 보증 서비스가 포함될 수 있습니다. 이러한 경우 Hewlett Packard Enterprise는 부품 제공 보증 서비스의 조건에 따라 교체 부품만을 무료로 제공합니다.

부품 제공 보증 서비스 제공 시 CSR 부품 교체는 의무 사항입니다. 사용자가 Hewlett Packard Enterprise에 이 부품의 교체를 요청할 경우 이 서비스에 대한 출장비 및 작업비가 청구됩니다.

Removal and replacement procedures

Safety considerations

Before performing service procedures, review all the safety information.

Preventing electrostatic discharge

To prevent damaging the system, be aware of the precautions you must follow when setting up the system or handling parts. A discharge of static electricity from a finger or other conductor may damage system boards or other static-sensitive devices. This type of damage may reduce the life expectancy of the device.

Procedure

- Avoid hand contact by transporting and storing products in static-safe containers.
- Keep electrostatic-sensitive parts in their containers until they arrive at static-free workstations.
- Place parts on a grounded surface before removing them from their containers.
- Avoid touching pins, leads, or circuitry.
- Always be properly grounded when touching a static-sensitive component or assembly.

Symbols on equipment

The following symbols might be found on the equipment to indicate the presence of potentially hazardous conditions.



WARNING:  This symbol indicates the presence of hazardous energy circuits or electric shock hazards. Refer all servicing to qualified personnel.

To reduce the risk of injury from electric shock hazards, do not open this enclosure. Refer all maintenance, upgrades, and servicing to qualified personnel.



WARNING:  This symbol indicates the presence of electric shock hazards. The area contains no user or field serviceable parts. Do not open for any reason.

To reduce the risk of injury from electric shock hazards, do not open this enclosure.



WARNING: 

This symbol on an RJ-45 receptacle indicates a network interface connection.

To reduce the risk of electric shock, fire, or damage to the equipment, do not plug telephone or telecommunications connectors into this receptacle.



WARNING:  This symbol indicates the presence of a hot surface or hot component. If this surface is contacted, the potential for injury exists.

To reduce the risk of injury from a hot component, allow the surface to cool before touching.

WARNING:  This symbol indicates that the component exceeds the recommended weight for one individual to handle safely.

To reduce the risk of personal injury or damage to the equipment, observe local occupational health and safety requirements and guidelines for manual material handling.

51.71 kg

114.00 lb

WARNING:  These symbols, on power supplies or systems, indicate that the equipment is supplied by multiple sources of power.

To reduce the risk of injury from electric shock, remove all power cords to disconnect power from the system completely.

Server warnings and cautions

Before installing a server, be sure that you understand the following warnings and cautions.

WARNING: To reduce the risk of electric shock, personal injury, and damage to the equipment:

- Do not attempt to service any parts of the equipment other than those specified in the following procedure. Any other activities may require that you shut down the server and remove the power cord.
- Installation and maintenance of this product must be performed by individuals who are knowledgeable about the procedures, precautions, and hazards associated with the product.

WARNING: To reduce the risk of personal injury from hot surfaces, allow the drives and the internal system components to cool before touching them.

WARNING: To reduce the risk of fire or burns after removing the energy pack:

- Do not disassemble, crush, or puncture the energy pack.
- Do not short external contacts.
- Do not dispose of the energy pack in fire or water.
- Do not expose the energy pack to low air pressure as it might lead to explosion or leakage of flammable liquid or gas.
- Do not expose the energy pack to temperatures higher than 60°C (140°F).

After power is disconnected, battery voltage might still be present for 1s to 160s.

CAUTION: Do not operate the server for long periods with the access panel open or removed. Operating the server in this manner results in improper airflow and improper cooling that can lead to thermal damage.

Preparation procedures

Power down the server

Before powering down the server for any upgrade or maintenance procedures, perform a backup of critical server data and programs.

IMPORTANT: When the server is in standby mode, auxiliary power is still being provided to the system.

To power down the server, use one of the following methods:

- Press and release the Power On/Standby button.

  This method initiates a controlled shutdown of applications and the OS before the server enters standby mode.
- Press and hold the Power On/Standby button for more than 4 seconds to force the server to enter standby mode.

  This method forces the server to enter standby mode without properly exiting applications and the OS. If an application stops responding, you can use this method to force a shutdown.
- Use a virtual power button selection through iLO.

  This method initiates a controlled remote shutdown of applications and the OS before the server enters standby mode.

Before proceeding, verify that the server is in standby mode by observing that the system power LED is amber.

Extending the server from the rack

WARNING: To reduce the risk of personal injury or equipment damage, be sure that the rack is adequately stabilized before extending anything from the rack.

Procedure

Pull down the quick release levers on each side of the server, and then extend the server from the rack.

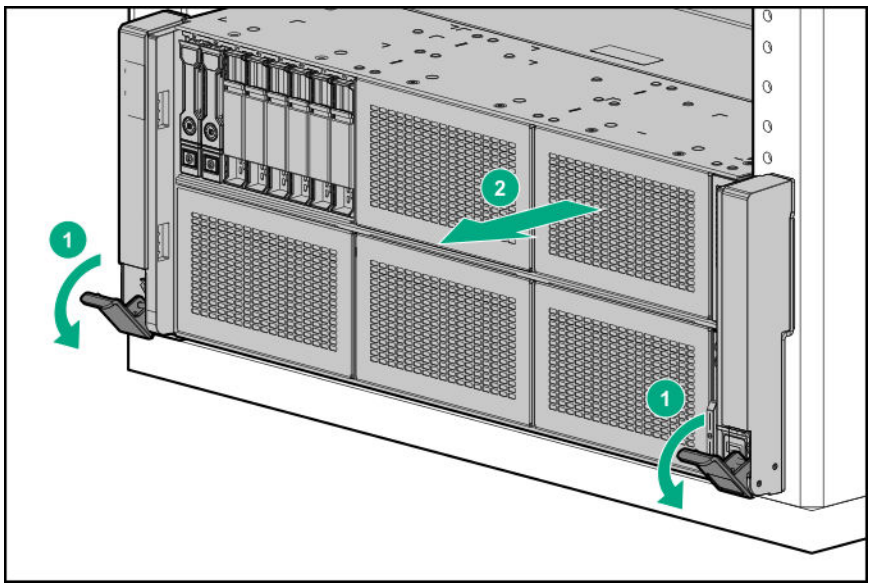

Removing the server from the rack

Procedure

1. **Power down the server**.
2. Extend the server from the rack (**Extending the server from the rack**).
3. Disconnect the cabling and remove the server from the rack.
   For more information, see the documentation that ships with the rack mounting option.
4. Place the server on a sturdy, level surface.

Accessing the Systems Insight Display

Procedure

1. Press and release the panel.
2. Pull out the display to fully extend it, and then rotate the display to view the LEDs.

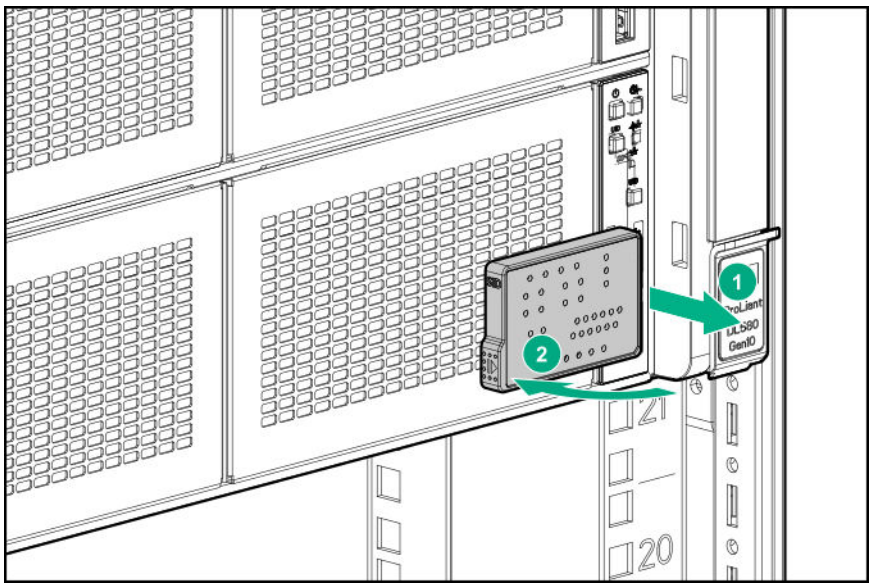

Releasing the cable management arm

Release the cable management arm and then swing the arm away from the rack.

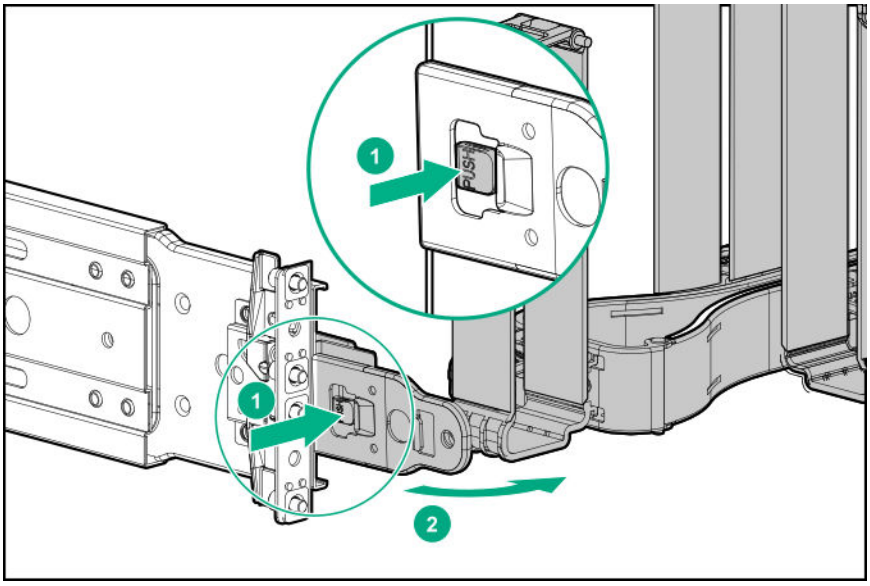

Removing the access panel

WARNING: To reduce the risk of personal injury from hot surfaces, allow the drives and the internal system components to cool before touching them.

CAUTION: To prevent damage to electrical components, take the appropriate anti-static precautions before beginning any installation, removal, or replacement procedure. Improper grounding can cause electrostatic discharge.

CAUTION: Do not operate the server for long periods with the access panel open or removed. Operating the server in this manner results in improper airflow and improper cooling that can lead to thermal damage.

Procedure

1. **Power down the server**.
2. Remove all power:
   a. Disconnect each power cord from the power source.
   b. Disconnect each power cord from the server.
3. Do one of the following:
   - Extend the server from the rack (**Extending the server from the rack**).
   - Remove the server from the rack (**Removing the server from the rack**).
4. If the locking latch is locked, use a T-15 Torx screwdriver to unlock the latch.
5. Open the locking latch.

   The access panel slides back, releasing it from the chassis.
6. Lift and remove the access panel.

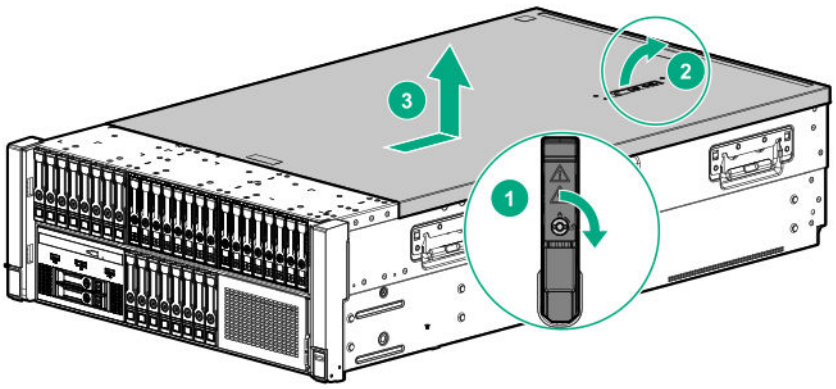

Turn the access panel over to locate the server label. This label provides convenient access to component identification and LED status indicators.

Removing the bezel

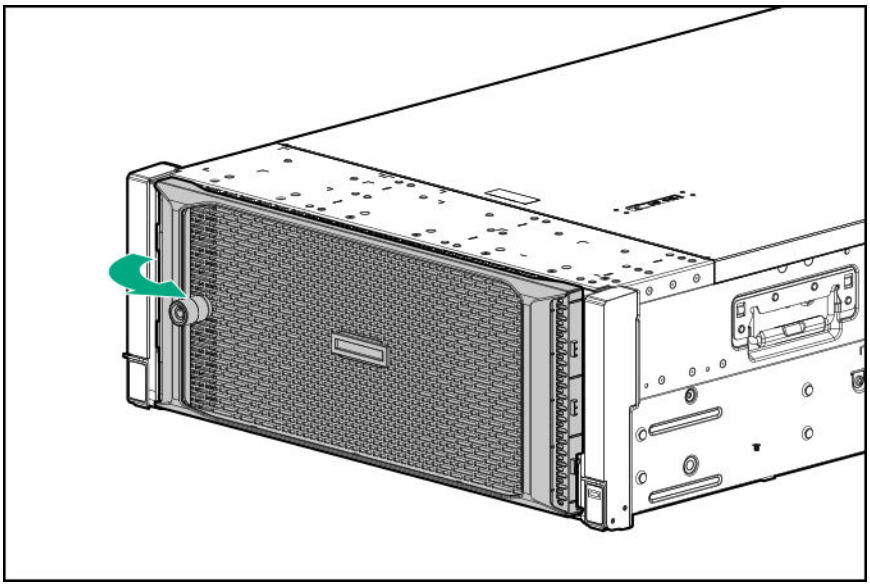

Removing the CPU Mezzanine UPI performance kit

Procedure

1. **Power down the server**.
2. Remove all power:
   a. Disconnect each power cord from the power source.
   b. Disconnect each power cord from the server.
3. Do one of the following:
   - **Extending the server from the rack**.
   - **Removing the server from the rack**.
4. **Removing the access panel**.

   CAUTION: Do not operate the server for long periods with the access panel open or removed. Operating the server in this manner results in improper airflow and improper cooling that can lead to thermal damage.
5. Remove the primary PCIe riser cage (**Removing a primary PCIe riser cage**).
6. Remove the CPU Mezzanine UPI performance kit.

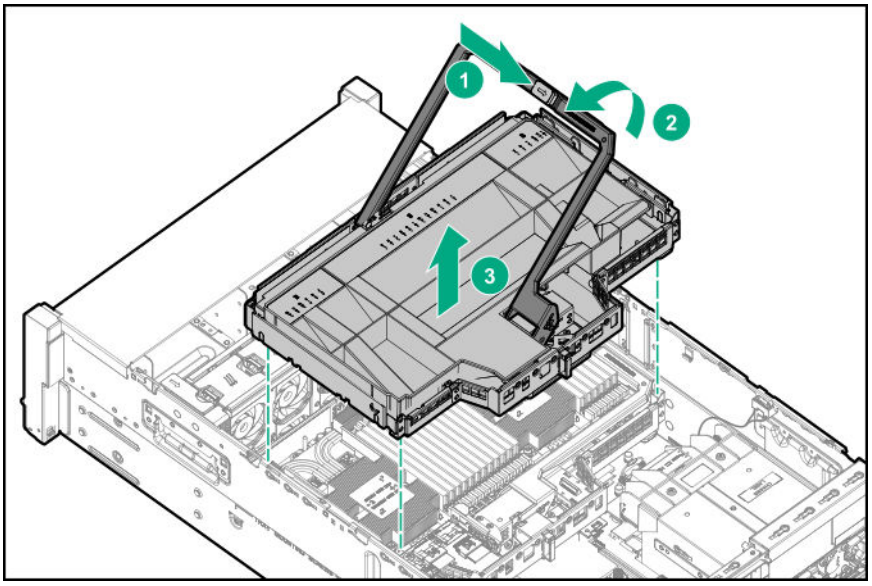

To replace the component, reverse the removal procedure.

Removing and replacing a drive blank

Procedure

1. Press the drive release button.
2. Remove the drive.

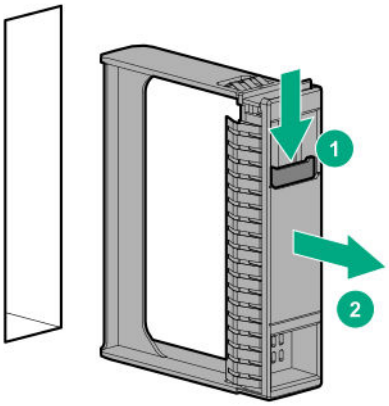

CAUTION: To prevent improper cooling and thermal damage, do not operate the compute module unless all bays are populated with either a component or a blank.

To replace the component, reverse the removal procedure.

Removing and replacing a hot-plug SAS or SATA drive

Procedure

1. Determine the status of the drive from the drive LED definitions (**Hot-plug drive LED definitions**).
2. Back up all data on the drive.
3. Remove the drive.

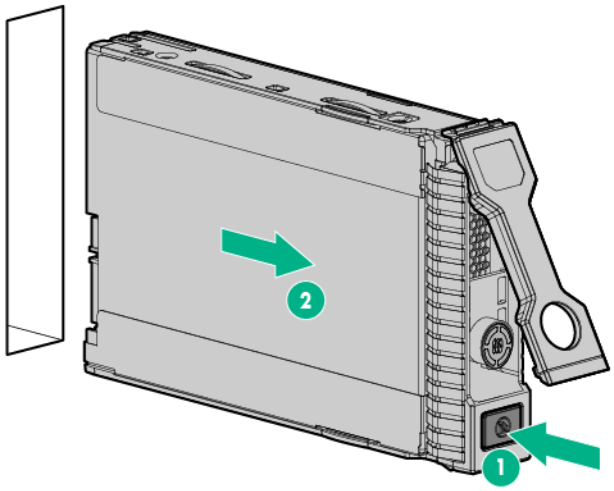

To replace the drive, slide the drive into the bay until it is fully seated, and then close the latch handle.

Removing and replacing an NVMe drive

Procedure

1. Determine the status of the drive from the drive LED definitions (**NVMe SSD LED definitions**).
2. Back up all server data.
3. Remove the drive:
   a. Push the Power button.

      The Do Not Remove button will illuminate and flash. Do not press the button while it is illuminated.

   b. When the flashing stops and the icon on the button is no longer illuminated or flashing, press the Do Not Remove button to release the release lever.

   c. Pull the release lever to disengage the drive from the backplane, and slide the drive out of the drive bay.

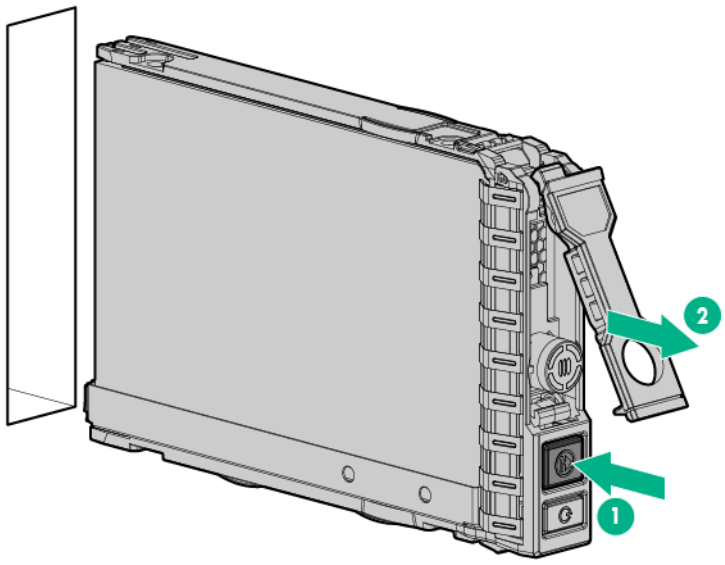

4. Prepare the replacement drive.

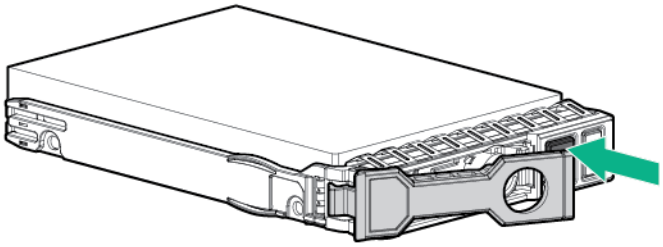

5. Install the drive.

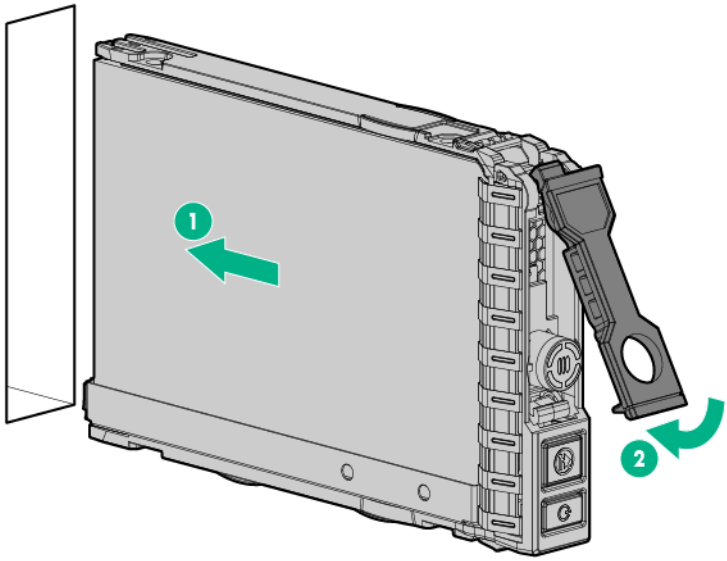

6. Observe the LED status of the drive.

Removing and replacing a Systems Insight Display

Procedure

1. **Power down the server**.
2. Remove all power:
   a. Disconnect each power cord from the power source.
   b. Disconnect each power cord from the server.
3. Do one of the following:
   - Extend the server from the rack (**Extending the server from the rack**).
   - Remove the server from the rack (**Removing the server from the rack**).
4. Remove the access panel (**Removing the access panel**).

   CAUTION: Do not operate the server for long periods with the access panel open or removed. Operating the server in this manner results in improper airflow and improper cooling that can lead to thermal damage.
5. Remove the fan cage (**Removing and replacing the fan cage**)
6. Remove the primary PCIe riser cage (**Removing a primary PCIe riser cage**).
7. If installed, remove the butterfly riser cage (**Removing a butterfly PCIe riser cage**).
8. Remove the air baffle (**Removing the air baffle**).
9. Remove the processor mezzanine tray (**Removing and replacing the processor mezzanine tray**).
10. Disconnect the cables from the system board depending on server configuration.
11. Remove the Systems Insight Display.

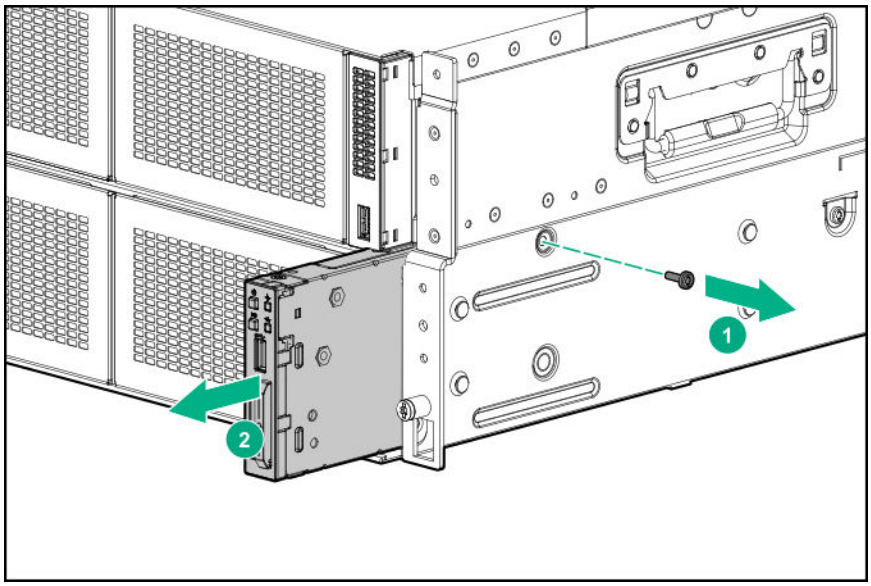

To replace the component, reverse the removal procedure.

Removing a primary PCIe riser cage

CAUTION: To prevent damage to the server or expansion boards, power down the server and remove all AC power cords before removing or installing the PCIe riser cage.

CAUTION: To avoid damaging the connectors, always install the air baffle into the server before installing the riser cages.

Procedure

1. **Power down the server**.
2. Remove all power:
   a. Disconnect each power cord from the power source.
   b. Disconnect each power cord from the server.
3. Do one of the following:
   - Extend the server from the rack (**Extending the server from the rack**).
   - Remove the server from the rack (**Removing the server from the rack**).
4. Remove the access panel (**Removing the access panel**).

   CAUTION: Do not operate the server for long periods with the access panel open or removed. Operating the server in this manner results in improper airflow and improper cooling that can lead to thermal damage.
5. Disconnect all cables connected to the components installed in the riser cage.
6. Remove the primary riser cage.

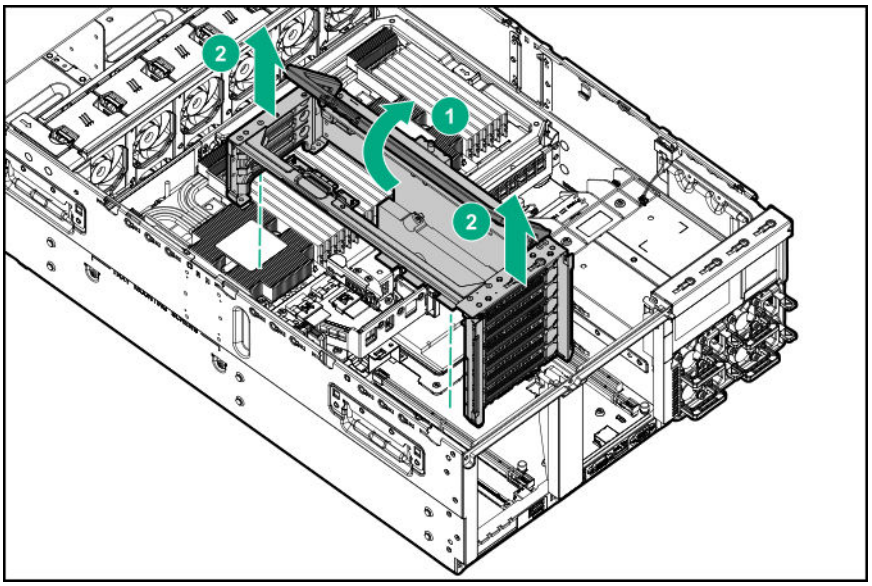

To replace the component, reverse the removal procedure.

CAUTION: Be sure there are no transceivers installed in any expansion boards before installing the riser cage. Any installed SFF components will cause interference with the riser cage installation and possible damage to equipment.

Removing a butterfly PCIe riser cage

CAUTION: To avoid damaging the connectors, always install the air baffle into the server before installing the riser cages.

Procedure

1. **Power down the server**.
2. Remove all power:
   a. Disconnect each power cord from the power source.
   b. Disconnect each power cord from the server.
3. Do one of the following:
   - Extend the server from the rack (**Extending the server from the rack**).
   - Remove the server from the rack (**Removing the server from the rack**).
4. Remove the access panel (**Removing the access panel**).

   CAUTION: Do not operate the server for long periods with the access panel open or removed. Operating the server in this manner results in improper airflow and improper cooling that can lead to thermal damage.
5. Remove the butterfly PCIe riser cage.

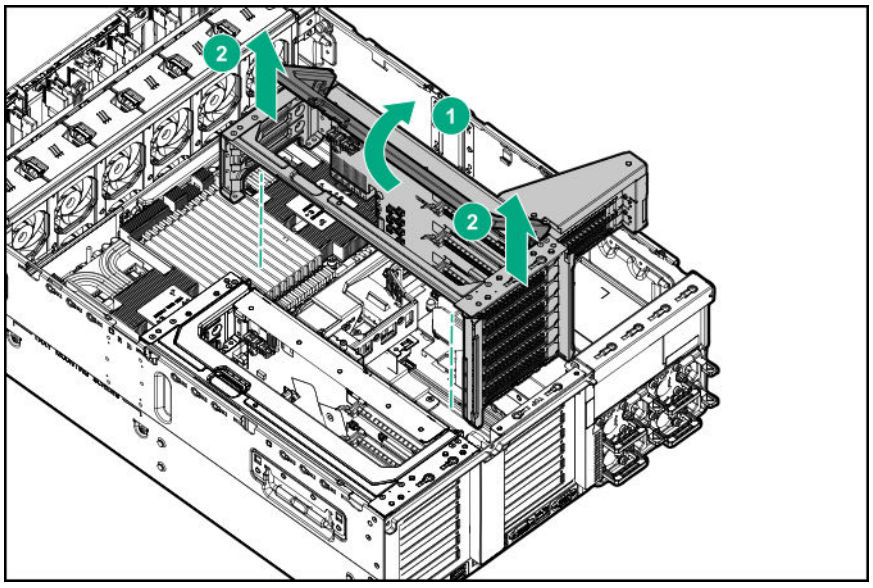

To replace the component, reverse the removal procedure.

Removing the air baffle

CAUTION: For proper cooling, do not operate the server without the access panel, baffles, expansion slot covers, or blanks installed. If the server supports hot-plug components, minimize the amount of time the access panel is open.

CAUTION: To avoid damaging the connectors, always install the air baffle into the server before installing the riser cages.

Procedure

1. **Power down the server**.
2. Remove all power:
   a. Disconnect each power cord from the power source.
   b. Disconnect each power cord from the server.
3. Do one of the following:
   - Extend the server from the rack (**Extending the server from the rack**).
   - Remove the server from the rack (**Removing the server from the rack**).
4. Remove the access panel (**Removing the access panel**).

   CAUTION: Do not operate the server for long periods with the access panel open or removed. Operating the server in this manner results in improper airflow and improper cooling that can lead to thermal damage.
5. Remove the primary PCIe cage (**Removing a primary PCIe riser cage**).
6. If installed, remove the butterfly riser cage (**Removing a butterfly PCIe riser cage**).
7. Remove the air baffle.

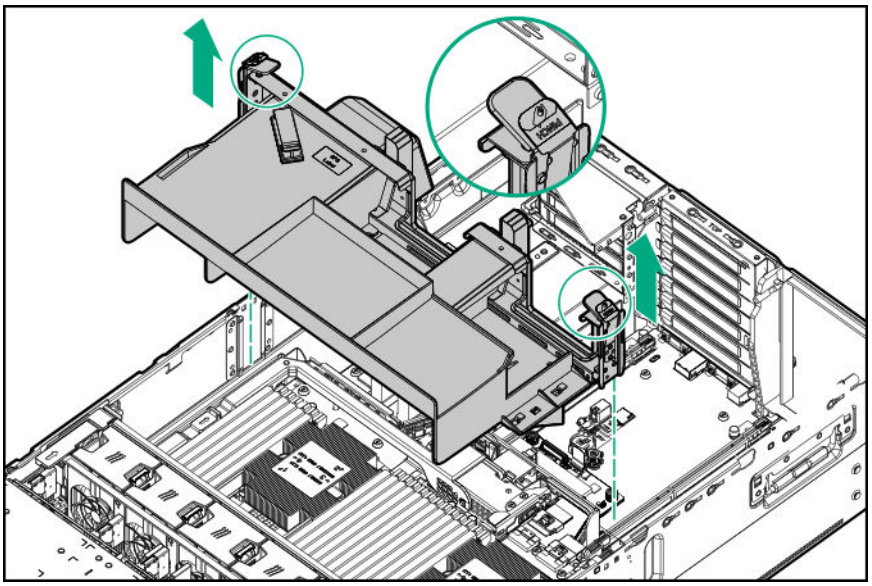

To replace the component, reverse the removal procedure.

Removing and replacing the fan cage

Procedure

1. **Power down the server**.
2. Remove all power:
   a. Disconnect each power cord from the power source.
   b. Disconnect each power cord from the server.
3. Do one of the following:
   - Extend the server from the rack (**Extending the server from the rack**).
   - Remove the server from the rack (**Removing the server from the rack**).
4. Remove the access panel (**Removing the access panel**).

   CAUTION: Do not operate the server for long periods with the access panel open or removed. Operating the server in this manner results in improper airflow and improper cooling that can lead to thermal damage.

5. Remove the fan cage.

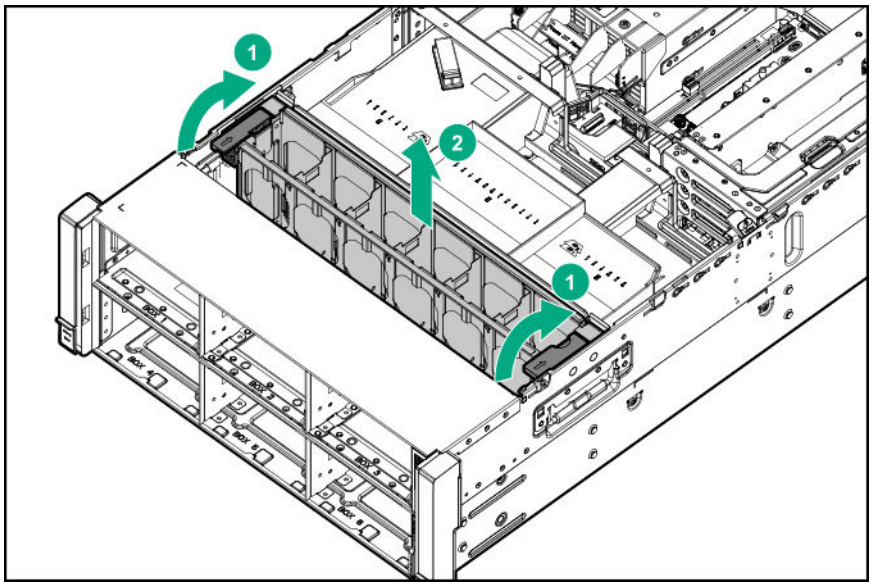

To replace the component, reverse the removal procedure.

Removing and replacing the fan cage holders

Procedure

1. **Power down the server**.
2. Remove all power:

a. Disconnect each power cord from the power source.

b. Disconnect each power cord from the server.

3. Do one of the following:

   - Extend the server from the rack (**Extending the server from the rack**).
   - Remove the server from the rack (**Removing the server from the rack**).

4. Remove the access panel (**Removing the access panel**).

   CAUTION: Do not operate the server for long periods with the access panel open or removed. Operating the server in this manner results in improper airflow and improper cooling that can lead to thermal damage.

5. Remove the fan cage (**Removing and replacing the fan cage**).

6. Remove the fan cage holders.

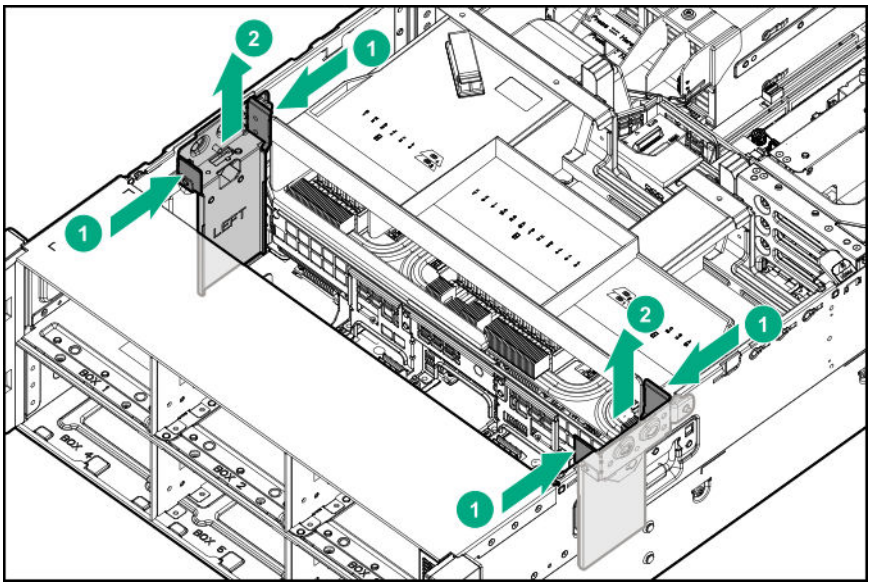

To replace the component, reverse the removal procedure.

Removing and replacing the hot-plug fan

Procedure

1. Extend the server from the rack (**Extending the server from the rack**).

2. Remove the access panel (**Removing the access panel**).

   CAUTION: Do not operate the server for long periods with the access panel open or removed. Operating the server in this manner results in improper airflow and improper cooling that can lead to thermal damage.

3. Remove the fan.

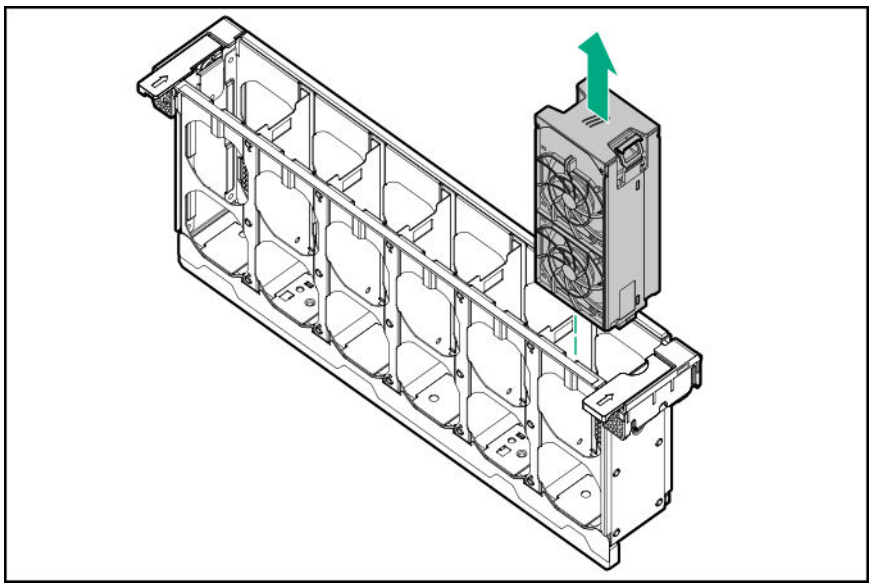

To replace the component, reverse the removal procedure.

Removing and replacing the processor mezzanine tray

Procedure

1. **Power down the server**.
2. Remove all power:
   a. Disconnect each power cord from the power source.
   b. Disconnect each power cord from the server.
3. Do one of the following:
   - Extend the server from the rack (**Extending the server from the rack**).
   - Remove the server from the rack (**Removing the server from the rack**).
4. Remove the access panel (**Removing the access panel**).

   CAUTION: Do not operate the server for long periods with the access panel open or removed. Operating the server in this manner results in improper airflow and improper cooling that can lead to thermal damage.
5. Remove the primary PCIe riser cage (**Removing a primary PCIe riser cage**).
6. If installed, remove the butterfly riser cage (**Removing a butterfly PCIe riser cage**).
7. Remove the air baffle (**Removing the air baffle**).
8. Remove the processor mezzanine tray.

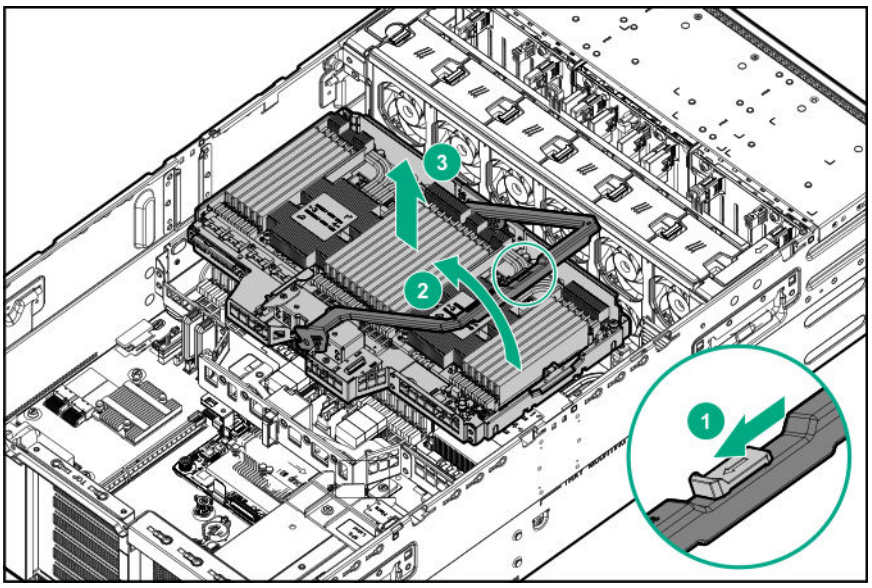

To replace the component, reverse the removal procedure.

Removing and replacing a DIMM

CAUTION: Failure to properly handle DIMMs can damage the DIMM components and the system board connector. For more information, see the DIMM handling guidelines in the troubleshooting guide for your product on the Hewlett Packard Enterprise website:

- HPE ProLiant Gen10 (**https://www.hpe.com/info/gen10-troubleshooting**)
- HPE Synergy (**https://www.hpe.com/info/synergy-troubleshooting**)

For specific DIMM population information, see the DIMM population guidelines on the Hewlett Packard Enterprise website (**http://www.hpe.com/docs/memory-population-rules**).

To identify the DIMMs installed in the server, see **DIMM slot locations**.

Procedure

1. **Power down the server**.
2. Remove all power:
   a. Disconnect each power cord from the power source.
   b. Disconnect each power cord from the server.
3. Do one of the following:
   - Extend the server from the rack (**Extending the server from the rack**).
   - Remove the server from the rack (**Removing the server from the rack**).
4. Remove the access panel (**Removing the access panel**).

CAUTION: Do not operate the server for long periods with the access panel open or removed. Operating the server in this manner results in improper airflow and improper cooling that can lead to thermal damage.

5. Remove the primary PCIe riser cage (**Removing a primary PCIe riser cage**).
6. If installed, remove the butterfly riser cage (**Removing a butterfly PCIe riser cage**).
7. Remove the air baffle (**Removing the air baffle**).
8. If installed, remove the processor mezzanine tray (**Removing and replacing the processor mezzanine tray**).
9. Remove the DIMM.

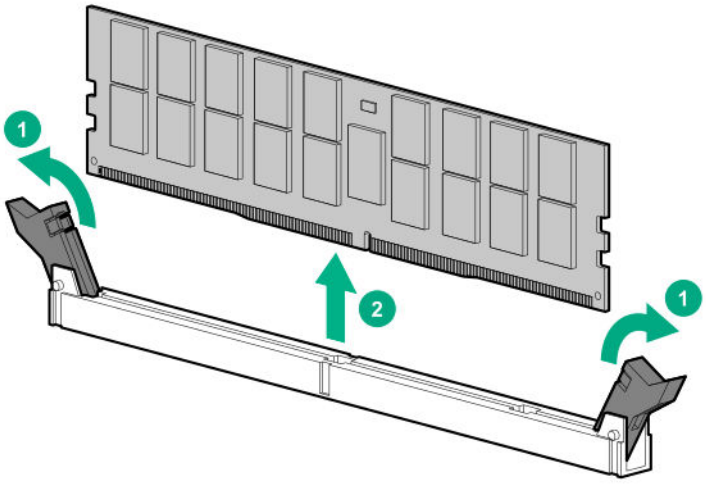

To replace the component, reverse the removal procedure.

DIMM-processor compatibility

The installed processor determines the type of DIMM that is supported in the server:

- First-generation Intel Xeon Scalable processors support DDR4-2666 DIMMs.
- Second-generation Intel Xeon Scalable processors support DDR4-2933 DIMMs.

Mixing DIMM types is not supported. Install only the supported DDR4-2666 or DDR4-2933 DIMMs in the server.

Removing and replacing a persistent memory module

For specific population and configuration information, see the memory population guidelines on the Hewlett Packard Enterprise website (**http://www.hpe.com/docs/memory-population-rules**).

To identify the persistent memory modules installed in the server, see **Intel Optane persistent memory 100 series for HPE label identification**.

Procedure

1. Observe the following alerts:

CAUTION: Electrostatic discharge can damage electronic components. Be sure you are properly grounded before beginning this procedure.

CAUTION: Failure to properly handle persistent memory modules can damage the component and the system board connector.

2. **Power down the server**.
3. Remove all power:
   a. Disconnect each power cord from the power source.
   b. Disconnect each power cord from the server.
4. Do one of the following:
   - Extend the server from the rack (**Extending the server from the rack**).
   - Remove the server from the rack (**Removing the server from the rack**).
5. Place the server on a flat, level work surface.
6. Remove the access panel (**Removing the access panel**).

CAUTION: Do not operate the server for long periods with the access panel open or removed. Operating the server in this manner results in improper airflow and improper cooling that can lead to thermal damage.

7. Remove the primary PCIe riser cage (**Removing a primary PCIe riser cage**).
8. If installed, remove the butterfly riser cage (**Removing a butterfly PCIe riser cage**).
9. Remove the air baffle (**Removing the air baffle**).
10. If installed, remove the processor mezzanine tray (**Removing and replacing the processor mezzanine tray**).
11. Remove the persistent memory module.

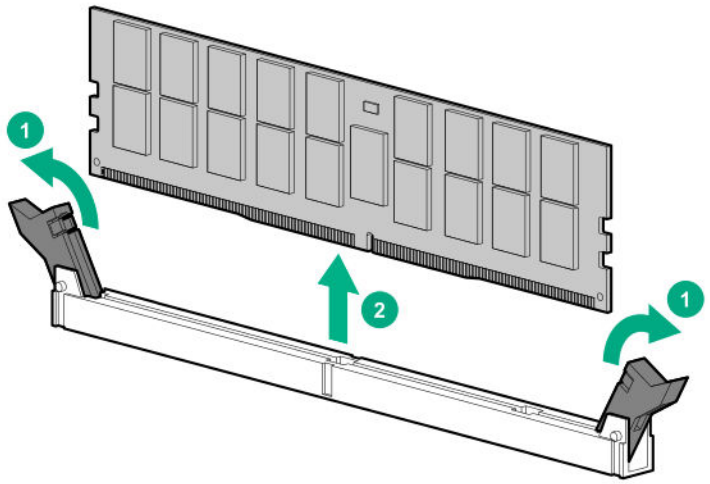

12. Install the new persistent memory module, and review the persistent memory configuration of the server.

For more information, see **Configuring the server for Intel Optane persistent memory 100 series for HPE**.

13. If you are relocating the persistent memory module to or from another server, see the **Persistent memory module relocation guidelines**.

Persistent memory module-processor compatibility

Intel Optane persistent memory 100 series for HPE is supported only in servers with second-generation Intel Xeon Scalable processors installed.

Configuring the server for Intel Optane persistent memory 100 series for HPE

After installing persistent memory modules, configure the server for Intel Optane persistent memory for HPE.

IMPORTANT: Always follow recommendations from your software application provider for high-availability best practices to ensure maximum uptime and data protection.

A number of configuration tools are available, including:

- UEFI System Utilities—Configure the server by using the UEFI System Utilities through the Remote Console. To access the UEFI System Utilities, press **F9** during POST.
- iLO RESTful API—Use the iLO RESTful API through tools such as the RESTful Interface Tool (ilorest) or other third-party tools.

For more information, see the *Intel Optane persistent memory 100 series for HPE User Guide* on the Hewlett Packard Enterprise website (**https://www.hpe.com/info/persistentmemory-docs**).

Persistent memory module relocation guidelines

Observe the relocation guidelines when doing the following:

- When relocating persistent memory modules to another DIMM slot on the server.
- When relocating persistent memory modules to another server.
- When reinstalling persistent memory modules after replacing the server system board.

IMPORTANT: When data must be preserved, Hewlett Packard Enterprise strongly recommends that you perform a manual backup of all user data on the persistent memory modules before changing the goal configuration or performing relocation procedures.

Requirements for relocating persistent memory modules or a set of persistent memory modules when the data must be preserved

- The destination server hardware must match the original server hardware configuration.
- All System Utilities settings in the destination server must match the original System Utilities settings in the original server.
- If persistent memory modules are used with **Persistent Memory Interleaving** set to Enabled in the original server, do the following:
  - Install the persistent memory modules in the same DIMM slots in the destination server.
  - Install the entire interleaved set (all the DIMMs and persistent memory modules on the processor) on the destination server.

If any of the requirements cannot be met during relocation, do the following:

- Manually back up the persistent memory data before relocating persistent memory modules to another server.
- Relocate the persistent memory modules to another server.
- Sanitize all persistent memory modules on the new server before using them.

Requirements for relocating encrypted persistent memory modules or a set of persistent memory modules when the data must be preserved

- If persistent memory modules are encrypted with local key management, either manually retrieve the persistent memory module passwords from the server (user-generated passwords only) or export a password file to a USB key.

  Hewlett Packard Enterprise recommends exporting the password file to a USB key.
- Follow the requirements for relocating persistent memory modules or a set of persistent memory modules when the data must be preserved.
- Do one of the following:
  - If persistent memory modules are encrypted with local key management, either manually enter the persistent memory module passwords in the System Utilities or import the password file from the USB key.
  - If persistent memory modules are encrypted with remote key management, enroll the HPE iLO in the key management server to provide access to the data on the persistent memory modules.

  For more information, see the *Intel Optane persistent memory 100 series for HPE User Guide* on the Hewlett Packard Enterprise website (**https://www.hpe.com/info/persistentmemory-docs**).

Requirements for relocating persistent memory modules or a set of persistent memory modules when the data does not have to be preserved

- Move the persistent memory modules to the new location and sanitize all persistent memory modules after installing them to the new location.
- Observe the DIMM and persistent memory module population guidelines.
- Observe the process for removing a persistent memory module.
- Observe the process for installing a persistent memory module.
- Review and configure the system settings for Intel Optane persistent memory for HPE.

For more information, see the *Intel Optane persistent memory 100 series for HPE User Guide* on the Hewlett Packard Enterprise website (**https://www.hpe.com/info/persistentmemory-docs**).

Persistent memory module sanitization

Media sanitization is defined by NIST SP800-88 *Guidelines for Media Sanitization* (Rev 1, Dec 2014) as "a general term referring to the actions taken to render data written on media unrecoverable by both ordinary and extraordinary means."

The specification defines the following levels:

- Clear: Overwrite user-addressable storage space using standard write commands; might not sanitize data in areas not currently user-addressable (such as bad blocks and over-provisioned areas).
- Purge: Overwrite or erase all storage space that might have been used to store data using dedicated device sanitize commands, such that data retrieval is "infeasible using state-of-the-art laboratory techniques."
- Destroy: Ensure that data retrieval is "infeasible using state-of-the-art laboratory techniques" and render the media unable to store data (such as disintegrate, pulverize, melt, incinerate, or shred).

Intel Optane persistent memory for HPE supports the purge level using a cryptographic erase technique and an overwrite technique.

HPE ProLiant and HPE Synergy Gen10 server products support sanitizing persistent memory modules during POST. Use the HPE RESTful Interface Tool or UEFI System Utilities to schedule sanitization on the next boot.

For more information, see the sanitization policies and guidelines in the *Intel Optane persistent memory 100 series for HPE User Guide* on the Hewlett Packard Enterprise website (**https://www.hpe.com/info/persistentmemory-docs**).

NIST SP800-88 *Guidelines for Media Sanitization* (Rev 1, Dec 2014) is available for download from the NIST website (**https://nvlpubs.nist.gov/nistpubs/SpecialPublications/NIST.SP.800-88r1.pdf**).

Removing and replacing an eight-bay SFF HDD/SSD drive cage

Procedure

1. **Power down the server**.
2. Remove all power:
   a. Disconnect each power cord from the power source.
   b. Disconnect each power cord from the server.
3. Do one of the following:
   - Extend the server from the rack (**Extending the server from the rack**).
   - Remove the server from the rack (**Removing the server from the rack**).
4. Remove the access panel (**Removing the access panel**).

   CAUTION: Do not operate the server for long periods with the access panel open or removed. Operating the server in this manner results in improper airflow and improper cooling that can lead to thermal damage.
5. Remove all drives (**Removing and replacing a hot-plug SAS or SATA drive**).
6. Remove the primary PCIe riser cage (**Removing a primary PCIe riser cage**).
7. If installed, remove the butterfly riser cage (**Removing a butterfly PCIe riser cage**).
8. Remove the air baffle (**Removing the air baffle**).
9. If installed, do one of the following:
   - Remove the processor mezzanine tray (**Removing and replacing the processor mezzanine tray**).
   - Remove the CPU Mezzanine UPI performance kit (**Removing and replacing a CPU Mezzanine UPI performance kit board**).

10. Remove the fan cage (**Removing and replacing the fan cage**).
11. To remove or reroute cables, remove the fan cage holders (**Removing and replacing the fan cage holders**).
12. Disconnect the cables from the drive cage backplane.
13. Remove the drive cage.

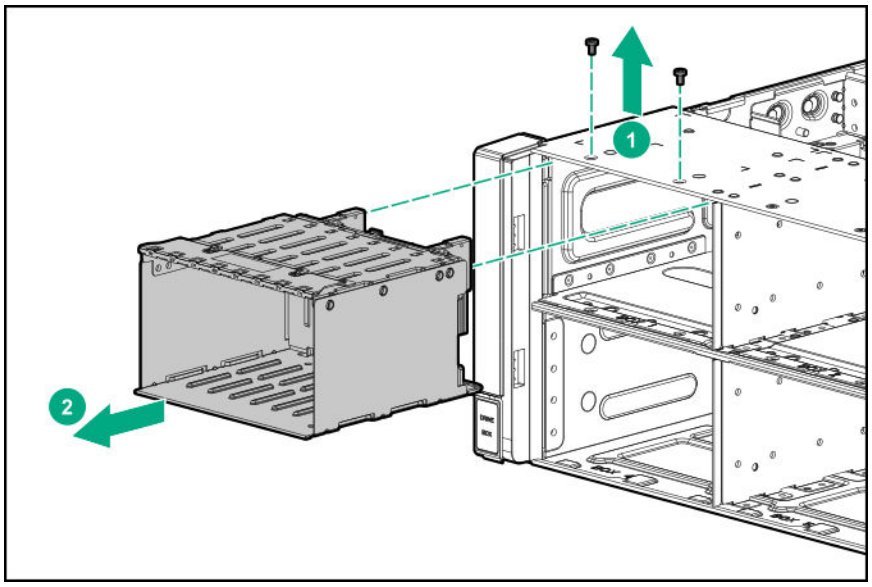

To replace the component, reverse the removal procedure.

Removing and replacing an eight-bay NVMe SSD drive cage

Procedure

1. **Power down the server**.
2. Remove all power:
   a. Disconnect each power cord from the power source.
   b. Disconnect each power cord from the server.
3. Do one of the following:
   - Extend the server from the rack (**Extending the server from the rack**).
   - Remove the server from the rack (**Removing the server from the rack**).
4. Remove the access panel (**Removing the access panel**).

   CAUTION: Do not operate the server for long periods with the access panel open or removed. Operating the server in this manner results in improper airflow and improper cooling that can lead to thermal damage.
5. If installed, remove the butterfly riser cage (**Removing a butterfly PCIe riser cage**).
6. Remove the primary PCIe riser cage (**Removing a primary PCIe riser cage**).

7. Remove the air baffle (**Removing the air baffle**).
8. If installed, do one of the following:
   - Remove the processor mezzanine tray (**Removing and replacing the processor mezzanine tray**).
   - Remove the CPU Mezzanine UPI performance kit (**Removing and replacing a CPU Mezzanine UPI performance kit board**).
9. Remove the fan cage (**Removing and replacing the fan cage**).
10. To remove or reroute cables, remove the fan cage holders (**Removing and replacing the fan cage holders**).
11. Disconnect the cables from the drive cage backplane.
12. Remove the hard drives (**Removing and replacing an NVMe drive**).
13. Remove the drive cage.

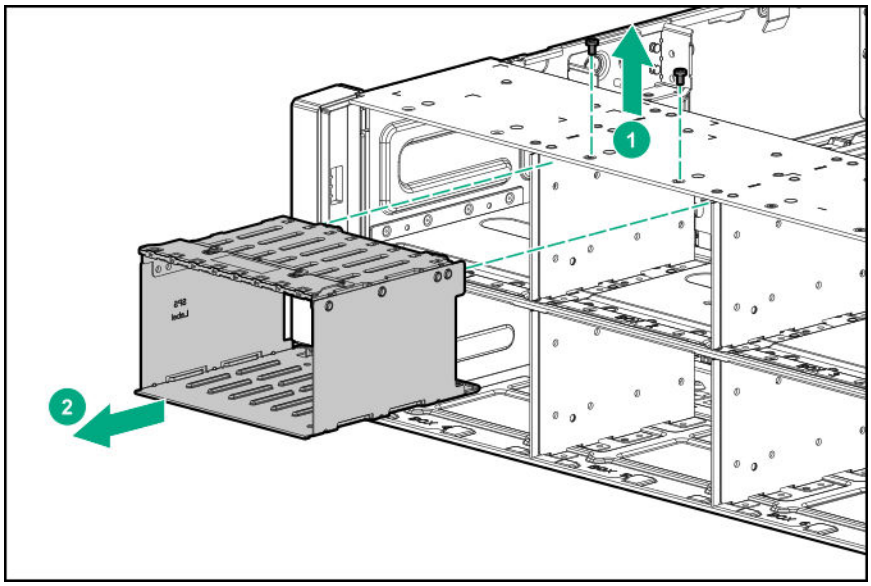

To replace the component, reverse the removal procedure.

Removing and replacing a six-bay SFF HDD/two-bay NVMe SSD (Premium) cage

Procedure

1. **Power down the server**.
2. Remove all power:
   a. Disconnect each power cord from the power source.
   b. Disconnect each power cord from the server.
3. Do one of the following:

- Extend the server from the rack (**Extending the server from the rack**).
- Remove the server from the rack (**Removing the server from the rack**).

4. Remove the access panel (**Removing the access panel**).

   CAUTION: Do not operate the server for long periods with the access panel open or removed. Operating the server in this manner results in improper airflow and improper cooling that can lead to thermal damage.

5. If installed, remove the butterfly riser cage (**Removing a butterfly PCIe riser cage**).
6. Remove the primary PCIe riser cage (**Removing a primary PCIe riser cage**).
7. Remove the air baffle (**Removing the air baffle**).
8. If installed, do one of the following:
   - Remove the processor mezzanine tray (**Removing and replacing the processor mezzanine tray**).
   - Remove the CPU Mezzanine UPI performance kit (**Removing and replacing a CPU Mezzanine UPI performance kit board**).
9. Remove the fan cage (**Removing and replacing the fan cage**).
10. To remove or reroute cables, remove the fan cage holders (**Removing and replacing the fan cage holders**).
11. Disconnect the cables from the drive cage backplane.
12. Do the following.
    - Remove the NVMe hard drives (**Removing and replacing an NVMe drive**).
    - Remove the SAS/SATA hard drives (**Removing and replacing a hot-plug SAS or SATA drive**).
13. Remove the drive cage.

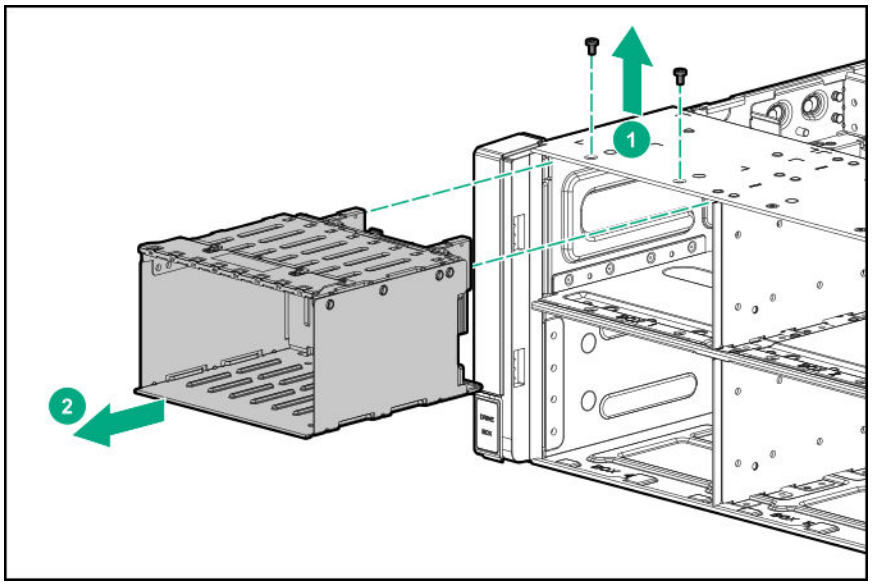

To replace the component, reverse the removal procedure.

Removing and replacing a universal media bay

Procedure

1. **Power down the server**.
2. Remove all power:
   a. Disconnect each power cord from the power source.
   b. Disconnect each power cord from the server.
3. Do one of the following:
   - Extend the server from the rack (**Extending the server from the rack**).
   - Remove the server from the rack (**Removing the server from the rack**).
4. Remove the access panel (**Removing the access panel**).

   CAUTION: Do not operate the server for long periods with the access panel open or removed. Operating the server in this manner results in improper airflow and improper cooling that can lead to thermal damage.
5. If installed, remove the butterfly riser cage (**Removing a butterfly PCIe riser cage**).
6. Remove the primary PCIe riser cage (**Removing a primary PCIe riser cage**).
7. Remove the air baffle (**Removing the air baffle**).
8. If installed, do one of the following:
   - Remove the processor mezzanine tray (**Removing and replacing the processor mezzanine tray**).
   - Remove the CPU Mezzanine UPI performance kit (**Removing and replacing a CPU Mezzanine UPI performance kit board**).
9. Remove the fan cage (**Removing and replacing the fan cage**).
10. To remove or reroute the cables, remove the fan cage holders (**Removing and replacing the fan cage holders**).
11. Disconnect the cables from the universal media bay and the optional two-bay SFF drive cage backplane, if installed.
12. Remove the universal media bay.

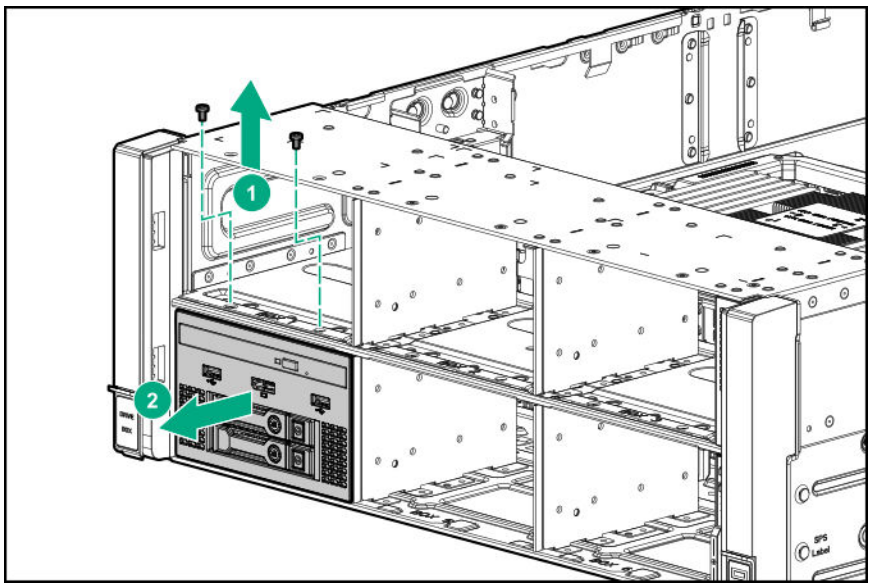

To replace the component, reverse the removal procedure.

Removing and replacing a two-bay SFF (Premium) drive cage

Procedure

1. **Power down the server**.
2. Remove all power:
   a. Disconnect each power cord from the power source.
   b. Disconnect each power cord from the server.
3. Do one of the following:
   - Extend the server from the rack (**Extending the server from the rack**).
   - Remove the server from the rack (**Removing the server from the rack**).
4. Remove the access panel (**Removing the access panel**).

   CAUTION: Do not operate the server for long periods with the access panel open or removed. Operating the server in this manner results in improper airflow and improper cooling that can lead to thermal damage.
5. If installed, remove the butterfly riser cage (**Removing a butterfly PCIe riser cage**).
6. Remove the primary PCIe riser cage (**Removing a primary PCIe riser cage**).
7. Remove the air baffle (**Removing the air baffle**).
8. If installed, do one of the following:

- Remove the processor mezzanine tray (**Removing and replacing the processor mezzanine tray**).
- Remove the CPU Mezzanine UPI performance kit (**Removing and replacing a CPU Mezzanine UPI performance kit board**).

9. Remove the fan cage (**Removing and replacing the fan cage**).
10. To remove or reroute cables, remove the fan cage holders (**Removing and replacing the fan cage holders**).
11. Disconnect the cables from the universal media bay.
12. Remove the universal media bay (**Removing and replacing a universal media bay**).
13. Do one of the following:

    - Remove the NVMe drives from the 2SFF drive bay (**Removing and replacing an NVMe drive**).
    - Remove the SAS/SATA drives from the 2SFF drive bay (**Removing and replacing a hot-plug SAS or SATA drive**).

14. Remove the drive cage.

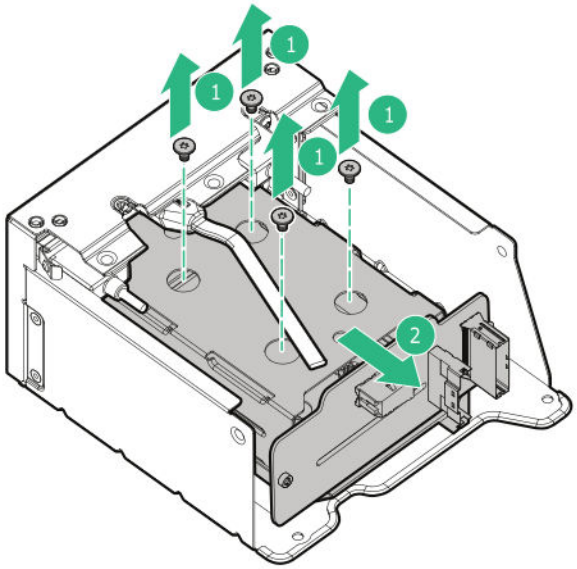

To replace the component, reverse the removal procedure.

Removing and replacing a 4-port NVMe mezzanine card

Procedure

1. **Power down the server**.
2. Remove all power:

    a. Disconnect each power cord from the power source.

    b. Disconnect each power cord from the server.

3. Do one of the following:

- Extend the server from the rack (**Extending the server from the rack**).
- Remove the server from the rack (**Removing the server from the rack**).

4. Remove the access panel (**Removing the access panel**).

> **CAUTION:** Do not operate the server for long periods with the access panel open or removed. Operating the server in this manner results in improper airflow and improper cooling that can lead to thermal damage.

5. If installed, remove the butterfly riser cage (**Removing a butterfly PCIe riser cage**).
6. Remove the primary PCIe riser cage (**Removing a primary PCIe riser cage**).
7. Remove the air baffle (**Removing the air baffle**).
8. Remove the processor mezzanine tray (**Removing and replacing the processor mezzanine tray**).
9. Remove the fan cage (**Removing and replacing the fan cage**).
10. To disconnect the cables, remove the fan cage holders (**Removing and replacing the fan cage holders**).
11. Disconnect the cables from the mezzanine card.
12. Remove the mezzanine card.

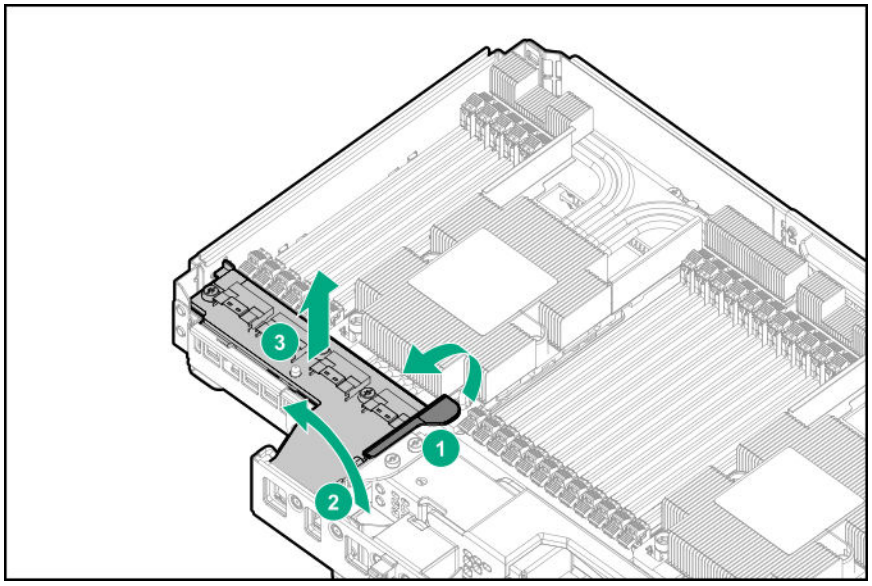

To replace the component, reverse the removal procedure.

Removing and replacing a riser board from the primary PCIe riser cage

Procedure

1. **Power down the server**.
2. Remove all power:

a. Disconnect each power cord from the power source.

b. Disconnect each power cord from the server.

3. Do one of the following:

   - Extend the server from the rack (**Extending the server from the rack**).
   - Remove the server from the rack (**Removing the server from the rack**).

4. Remove the access panel (**Removing the access panel**).

   CAUTION: Do not operate the server for long periods with the access panel open or removed. Operating the server in this manner results in improper airflow and improper cooling that can lead to thermal damage.

5. Remove the primary PCIe riser cage (**Removing a primary PCIe riser cage**).

6. Remove the riser board.

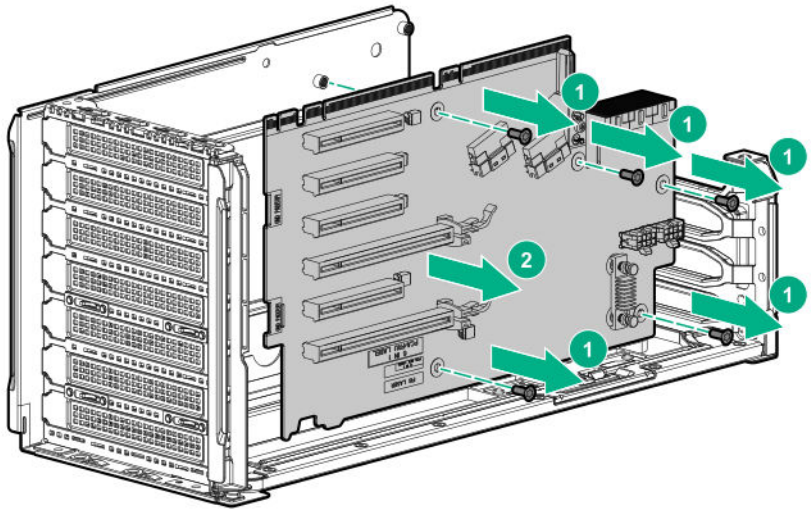

To replace the component, reverse the removal procedure.

Removing and replacing a riser board from the butterfly PCIe riser cage

Procedure

1. **Power down the server**.
2. Remove all power:

   a. Disconnect each power cord from the power source.

   b. Disconnect each power cord from the server.

3. Do one of the following:

- Extend the server from the rack (**Extending the server from the rack**).
- Remove the server from the rack (**Removing the server from the rack**).

4. Remove the access panel (**Removing the access panel**).

CAUTION: Do not operate the server for long periods with the access panel open or removed. Operating the server in this manner results in improper airflow and improper cooling that can lead to thermal damage.

5. Remove the butterfly PCIe riser cage (**Removing a butterfly PCIe riser cage**).
6. If replacing the secondary riser board, remove the tertiary riser cage slot blanks.

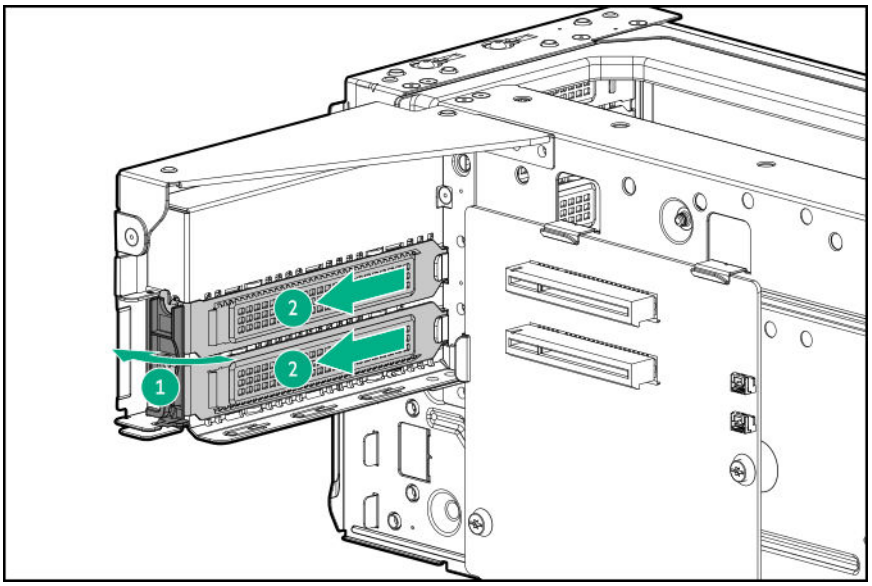

CAUTION: To prevent damage to the riser board during installation in the secondary riser, remove the expansion slot covers from the tertiary riser. Once the riser board is installed in the secondary riser, reinstall the tertiary riser expansion slot covers to prevent improper cooling.

7. Remove the riser board.
   - Secondary riser board

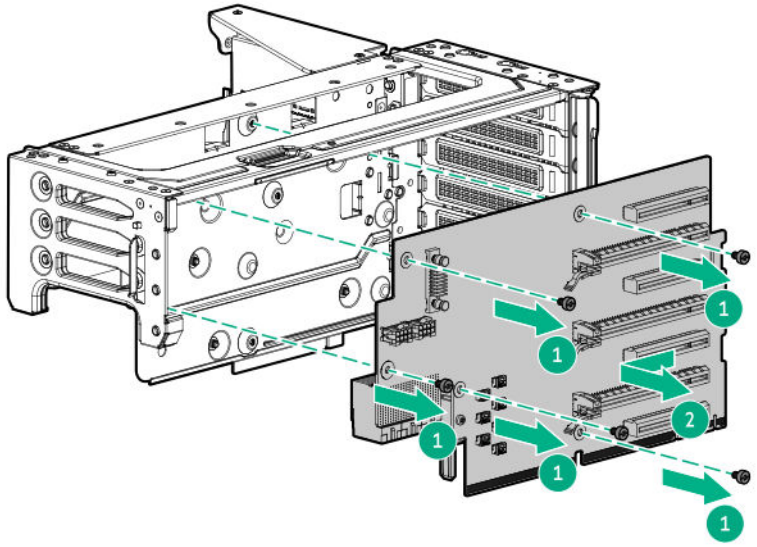

- Tertiary riser board

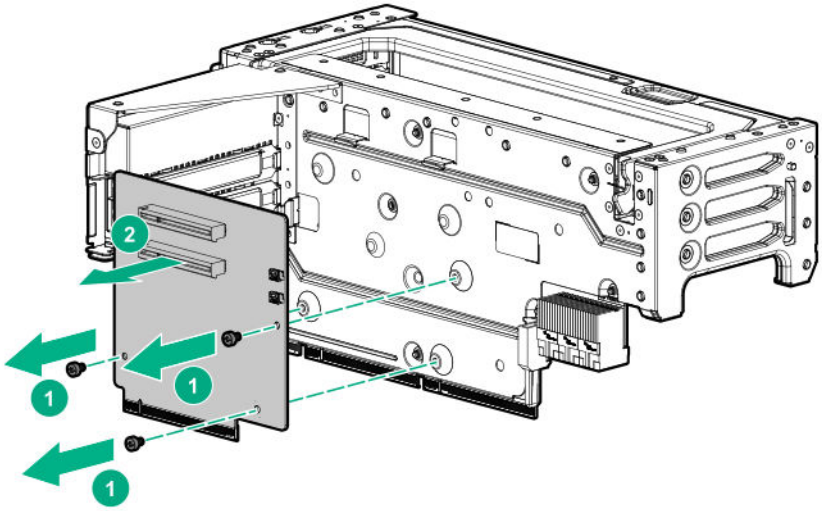

To replace the component, reverse the removal procedure.

Removing and replacing an expansion board

Procedure

1. **Power down the server**.
2. Remove all power:
   a. Disconnect each power cord from the power source.
   b. Disconnect each power cord from the server.
3. Do one of the following:

- Extend the server from the rack (**Extending the server from the rack**).
- Remove the server from the rack (**Removing the server from the rack**).

4. Remove the access panel (**Removing the access panel**).

> **CAUTION:** Do not operate the server for long periods with the access panel open or removed. Operating the server in this manner results in improper airflow and improper cooling that can lead to thermal damage.

5. Disconnect all cables connected to the components installed in the riser cage.
6. Do one of the following:
   - Remove the primary PCIe cage (**Removing a primary PCIe riser cage**).
   - Remove the butterfly PCIe cage (**Removing a butterfly PCIe riser cage**).
7. Remove the expansion board.

   The primary cage is shown.

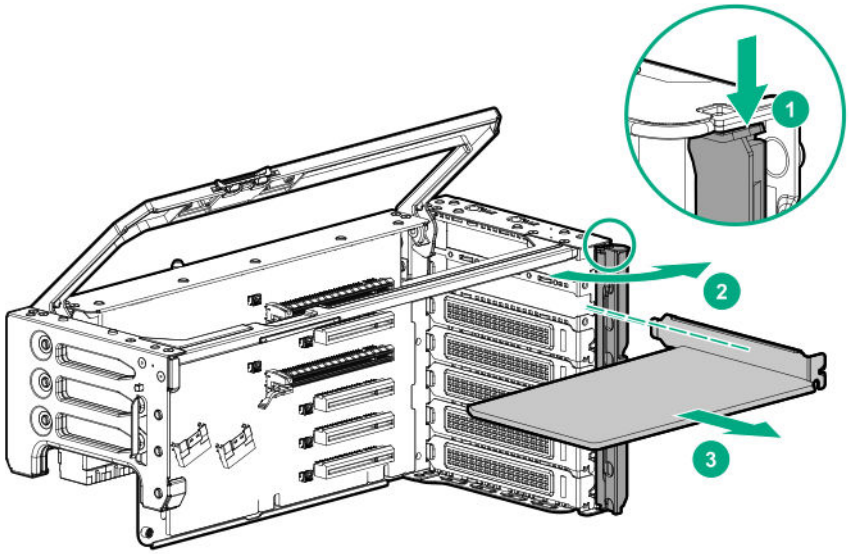

To replace the component, reverse the removal procedure.

Removing and replacing the HPE NS204i-p NVMe OS Boot Device option

Removing and replacing the boot device

Procedure

1. Observe the following alerts:

CAUTION: The boot device and the drives installed on the boot device are not hot-pluggable. To remove the boot device, or a drive from the boot device, you must first power down the server.

WARNING: To reduce the risk of personal injury from hot surfaces, allow the drives and the internal system components to cool before touching them.

2. Back up all server data.
3. **Power down the server**.
4. Remove all power:
   a. Disconnect each power cord from the power source.
   b. Disconnect each power cord from the server.
5. Do one of the following:
   - Extend the server from the rack (**Extending the server from the rack**).
   - Remove the server from the rack (**Removing the server from the rack**).
6. Remove the access panel (**Removing the access panel**).

   CAUTION: Do not operate the server for long periods with the access panel open or removed. Operating the server in this manner results in improper airflow and improper cooling that can lead to thermal damage.
7. Disconnect all cables connected to the components installed in the riser cage.
8. Do one of the following:
   - Remove the primary PCIe cage (**Removing a primary PCIe riser cage**).
   - Remove the butterfly PCIe cage (**Removing a butterfly PCIe riser cage**).
9. Remove the boot device

   The primary cage is shown.

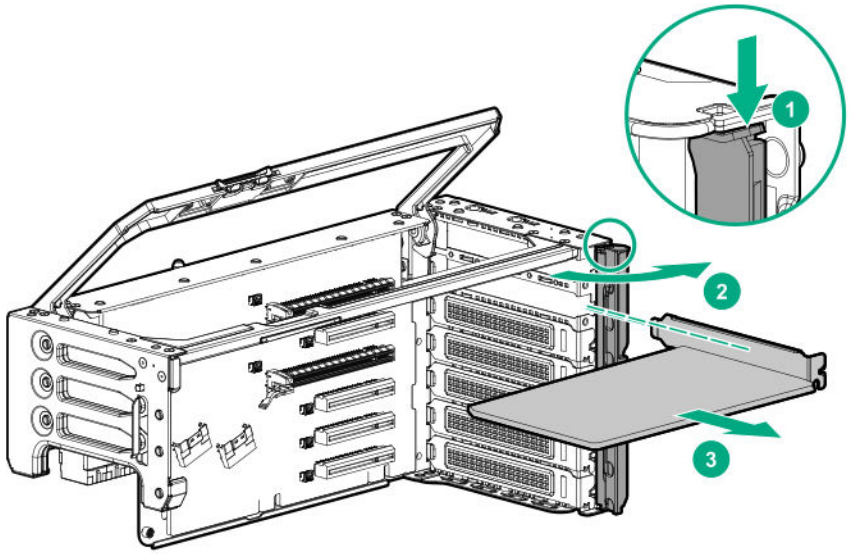

10. Remove the drives from the boot device.

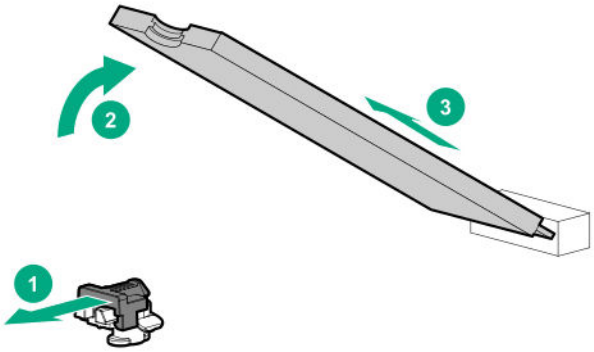

Retain these drives for installation onto the replacement boot device.

To replace the component, reverse the removal procedure.

Removing and replacing a boot device drive

The boot device supports two physical drive sizes:

- 22110 (110 mm)
- 2280 (80 mm)

Two drives of the same physical size, or one of each size, can be installed at the same time. Depending on the replacement drive size, you might need to **relocate the M.2 drive retaining latches** on the boot device.

Prerequisites

Review the **boot device drive bay LEDs** to determine the failed drive.

Procedure

1. Observe the following alerts:

CAUTION: The boot device and the drives installed on the boot device are not hot-pluggable. To remove the boot device, or a drive from the boot device, you must first power down the server.

WARNING: To reduce the risk of personal injury from hot surfaces, allow the drives and the internal system components to cool before touching them.

2. Back up all server data.
3. **Power down the server**.
4. Remove all power:
   a. Disconnect each power cord from the power source.
   b. Disconnect each power cord from the server.
5. Do one of the following:
   - Extend the server from the rack (**Extending the server from the rack**).
   - Remove the server from the rack (**Removing the server from the rack**).
6. Remove the access panel (**Removing the access panel**).

   CAUTION: Do not operate the server for long periods with the access panel open or removed. Operating the server in this manner results in improper airflow and improper cooling that can lead to thermal damage.
7. Disconnect all cables connected to the components installed in the riser cage.
8. Do one of the following:
   - Remove the primary PCIe cage (**Removing a primary PCIe riser cage**).
   - Remove the butterfly PCIe cage (**Removing a butterfly PCIe riser cage**).
9. Remove the boot device

   The primary cage is shown.

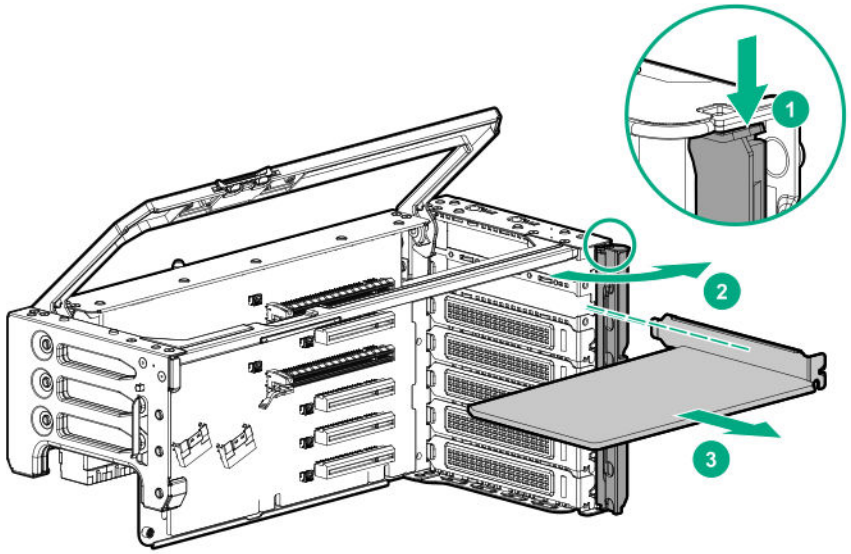

10. Remove the failed drive from the boot device.

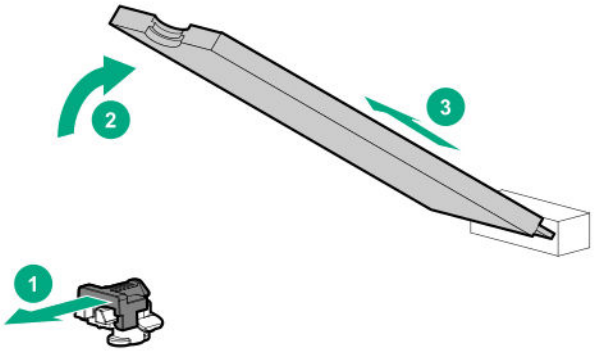

To replace the component, reverse the removal procedure.

Relocating the M.2 drive retaining latches

Procedure

1. If your spare kit includes an 80 mm replacement drive, remove the retaining latch from its current location.

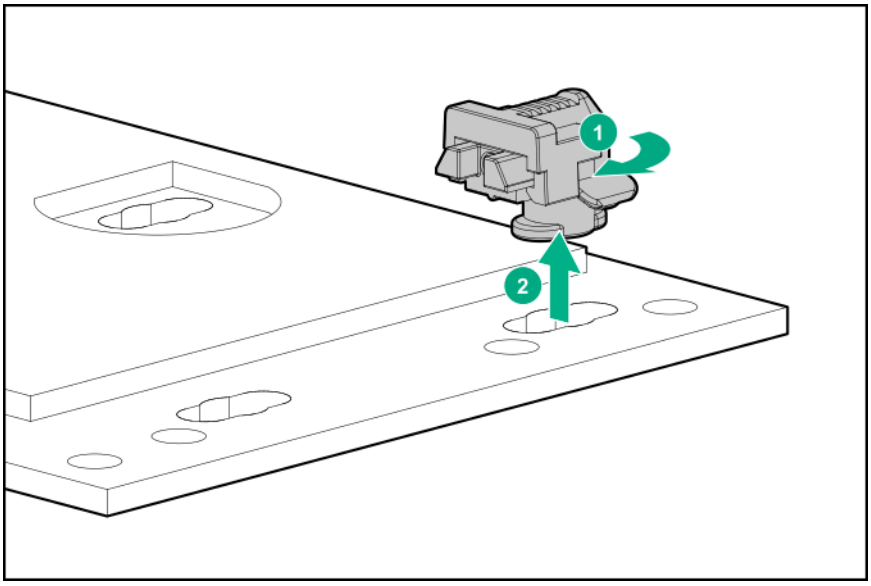

2. Install the retaining latch at the 80 mm drive location.

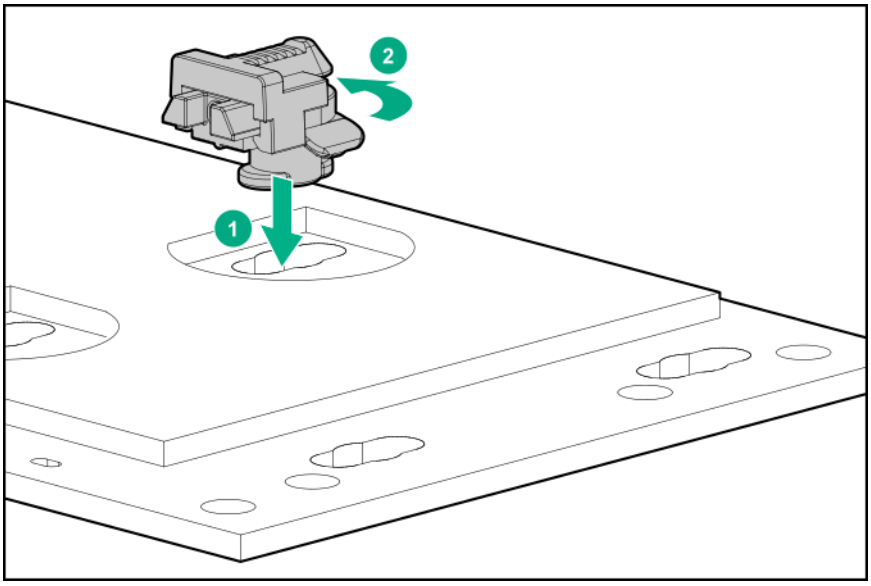

Removing and replacing the Pensando DSP DSC-25 2p SFP28 card

Decommissioning the Pensando DSP DSC-25 2p SFP28 card

Procedure

Before removing the DSC-25 card from the server, you must first decommission the card using the Pensando Policy and Services Manager (PSM).

For more information, see *Pensando Distributed Services Card for Single-Wire Management (DSC-25-SWM) Removal/ Replacement Guide* on the Hewlett Packard Enterprise website (**https://www.hpe.com/support/dsc25-replacement**).

Removing and replacing the Pensando DSP DSC-25 2p SFP28 card

NOTE: Images might differ from the actual product.

Prerequisites

The DSC-25 card has been decommissioned.

Procedure

1. Observe the following alerts:

   WARNING: To reduce the risk of personal injury from hot surfaces, allow the drives and the internal system components to cool before touching them.

   CAUTION: A discharge of static electricity from a finger or other conductor might damage system boards or other static-sensitive devices. To prevent damage, observe antistatic precautions.

   CAUTION: To prevent improper cooling and thermal damage, do not operate the server unless all PCI slots have either an expansion slot cover or an expansion board installed.

2. Power down the server.
3. Remove all power:
   a. Disconnect each power cord from the power source.
   b. Disconnect each power cord from the server.
4. Do one of the following:
   - Extend the server from the rack (**Extending the server from the rack**).
   - Remove the server from the rack (**Removing the server from the rack**).
5. Remove the access panel (**Removing the access panel**).

   CAUTION: Do not operate the server for long periods with the access panel open or removed. Operating the server in this manner results in improper airflow and improper cooling that can lead to thermal damage.

6. Disconnect all cables connected to the components installed in the riser cage.
7. Do one of the following:
   - Remove the primary PCIe cage (**Removing a primary PCIe riser cage**).
   - Remove the butterfly PCIe cage (**Removing a butterfly PCIe riser cage**).
8. Remove the DSC-25 card from the slot.

   The primary cage is shown.

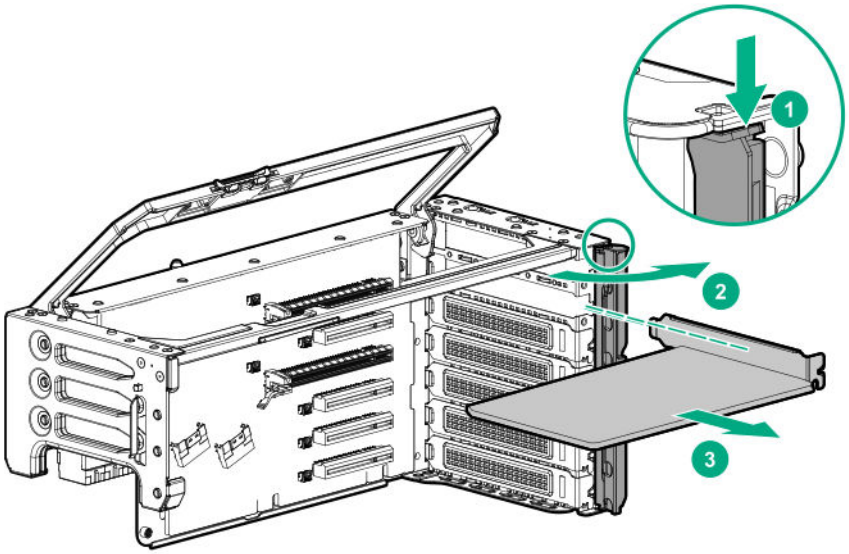

Replacing the Pensando DSP DSC-25 2p SFP28 card

NOTE: Images might differ from the actual product.

Procedure

1. Install the DSC-25 card into the PCIe slot:

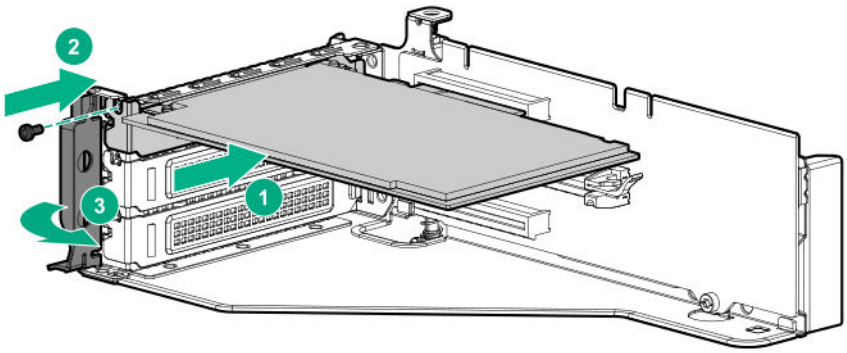

2. Install the PCIe riser cage into the server.

CAUTION: Do not twist the cable service loop during installation.

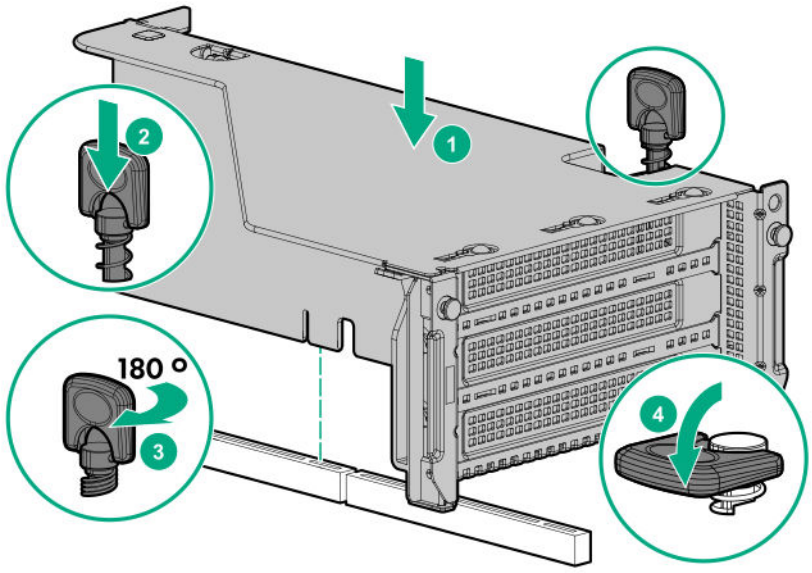

3. Install the access panel.
4. Slide the server into the rack.
5. Connect each power cord to the server.
6. Connect each power cord to the power source.
7. Power up the server.
8. Admit the new card to the Pensando Policy and Services Manager (PSM).

   For more information, see the replacement instructions for the card on the Hewlett Packard Enterprise website

   https://www.hpe.com/support/hpesc

Removing and replacing a 12G SAS Expander Card

To ensure that cables are connected correctly, observe the labels on the cable and component connectors.

Be sure that you have the latest firmware for the controllers and the expander card. To download the latest firmware, see the Hewlett Packard Enterprise website (**http://www.hpe.com/support/hpesc**).

WARNING: To reduce the risk of personal injury, electric shock, or damage to the equipment, remove power from the server by removing the power cord. The front panel Power On/Standby button does not shut off system power. Portions of the power supply and some internal circuitry remain active until AC power is removed.

CAUTION: To prevent improper cooling or thermal damage, the server PCI slots must have an expansion slot blank or an expansion board installed.

Procedure

1. **Power down the server**.
2. Remove all power:

a. Disconnect each power cord from the power source.

b. Disconnect each power cord from the server.

3. Do one of the following:

- Extend the server from the rack (**Extending the server from the rack**).
- Remove the server from the rack (**Removing the server from the rack**).

4. Remove the access panel (**Removing the access panel**).

> **CAUTION:** Do not operate the server for long periods with the access panel open or removed. Operating the server in this manner results in improper airflow and improper cooling that can lead to thermal damage.

5. Disconnect any cables connected to the expander card.
6. Do one of the following:

- Remove the primary PCIe cage (**Removing a primary PCIe riser cage**).
- Remove the butterfly PCIe cage (**Removing a butterfly PCIe riser cage**).

7. Remove the expander card.

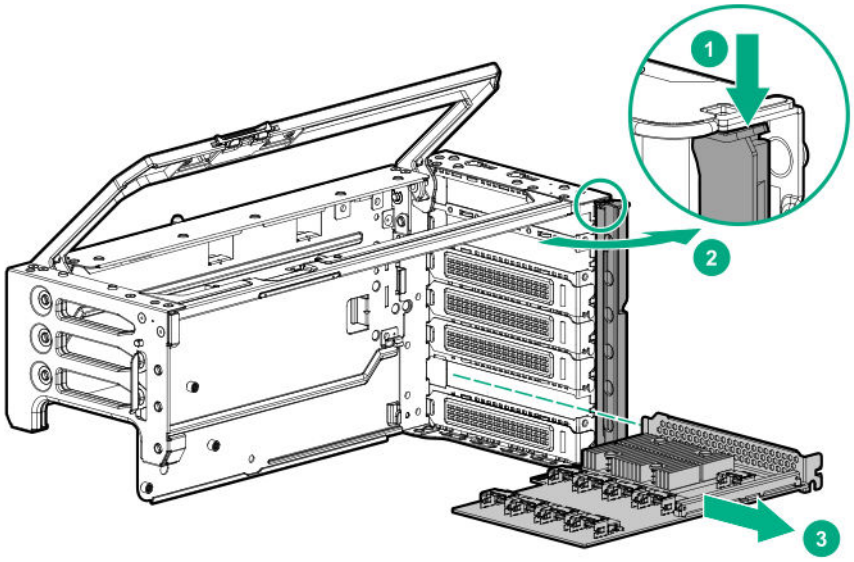

To replace the component, reverse the removal procedure.

Removing and replacing a 940QSFP 56 x16 adapter and auxiliary card

Procedure

1. **Power down the server**.
2. Remove all power:

a. Disconnect each power cord from the power source.

b. Disconnect each power cord from the server.

3. Do one of the following:

   - Extend the server from the rack (**Extending the server from the rack**).
   - Remove the server from the rack (**Removing the server from the rack**).

4. Remove the access panel (**Removing the access panel**).

   CAUTION: Do not operate the server for long periods with the access panel open or removed. Operating the server in this manner results in improper airflow and improper cooling that can lead to thermal damage.

5. Disconnect all cables connected to the components installed in the riser cage.
6. Depending on your configuration, do one or both of the following:

   - Remove the primary PCIe cage (**Removing a primary PCIe riser cage**).
   - Remove the butterfly PCIe cage (**Removing a butterfly PCIe riser cage**).

7. Remove the auxiliary card (**Removing and replacing an expansion board**).
8. Disconnect the cables to the auxiliary card:

   a. Open the retention clip and slide it away from the connectors.

   b. Gently pull up the top corner of the cable latch door.

   c. Disconnect the card cables.

9. Remove the adapter (**Removing and replacing an expansion board**).
10. Disconnect the cables to the adapter.

To replace the component:

1. Thread the adapter end of the auxiliary card cables through one of the retention clips provided with the installation kit.

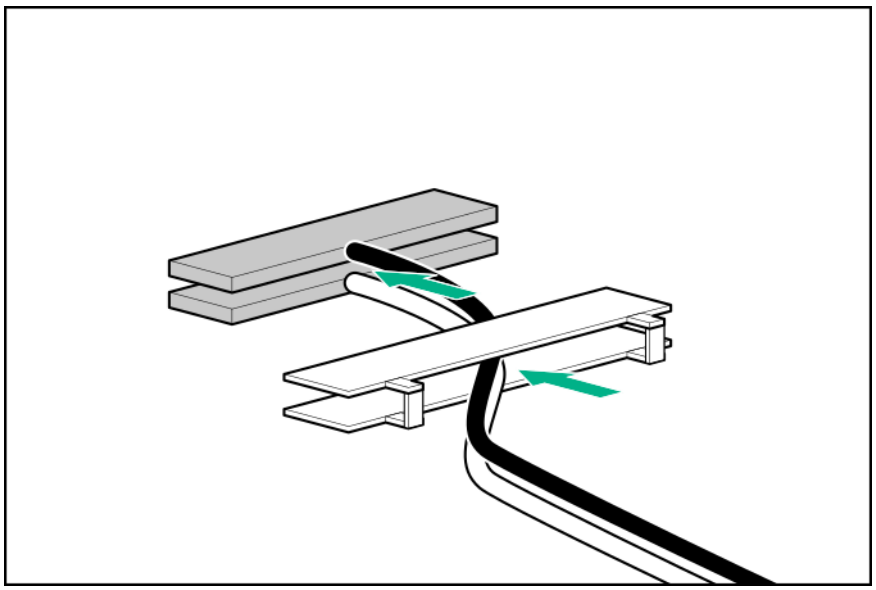

2. Open the cable latch door, connect the auxiliary card cables to the adapter ports so that the golden side of the cable connector is on the top, and then close the cable latch door.

   The white and black cables from the auxiliary card connect to the expansion board ports labeled WHITE CABLE and BLACK CABLE, respectively.

   The cable latch door must be open when connecting the cables.

   CAUTION: The connector pins are fragile and easily damaged. To avoid damaging the connector pins, do not use excessive force when connecting the cables.

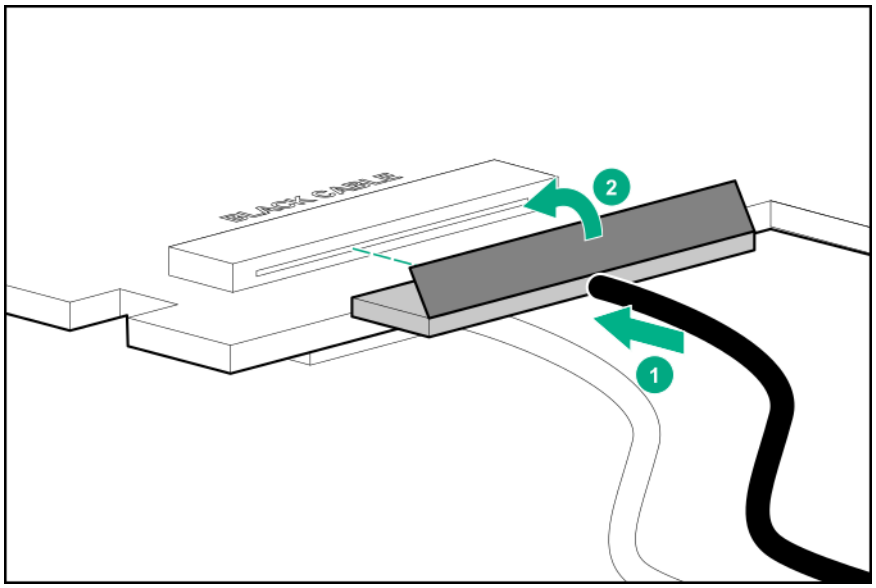

3. Install the retention clip.

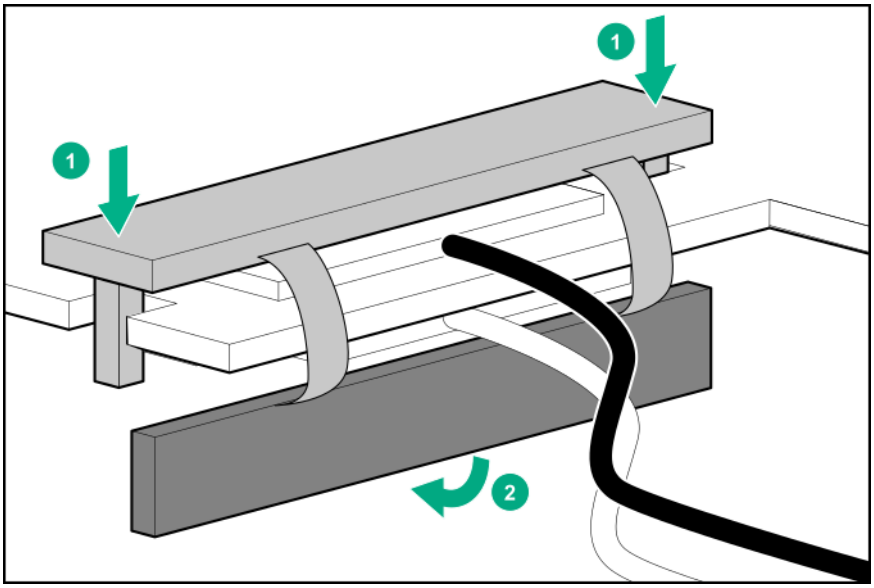

4. Thread the auxiliary cables through the second retention clip.
5. Connect the auxiliary cables to the auxiliary card.
6. Confirm that the orientation of the cables is correct.

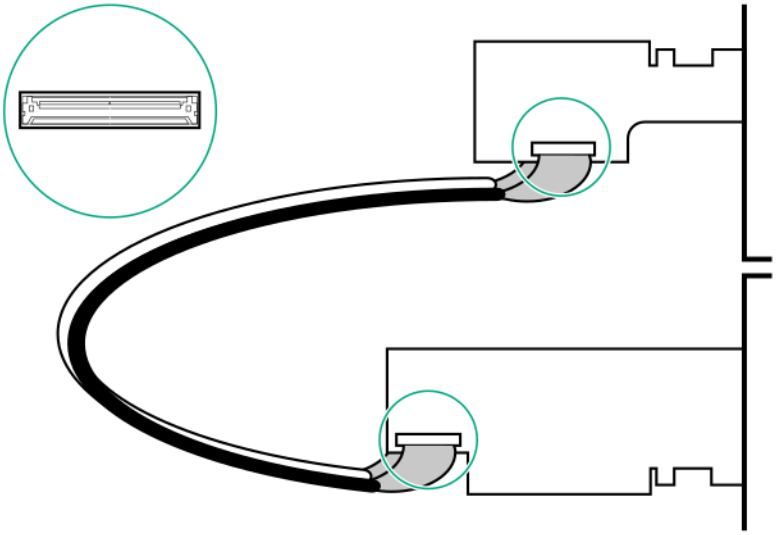

7. Install the adapter and auxiliary cards into supported expansion slots.

   Use the following table to determine the supported slot locations:

Processors	Adapter slot	Auxiliary card slot
2	6	13
4	2	9
	4	11

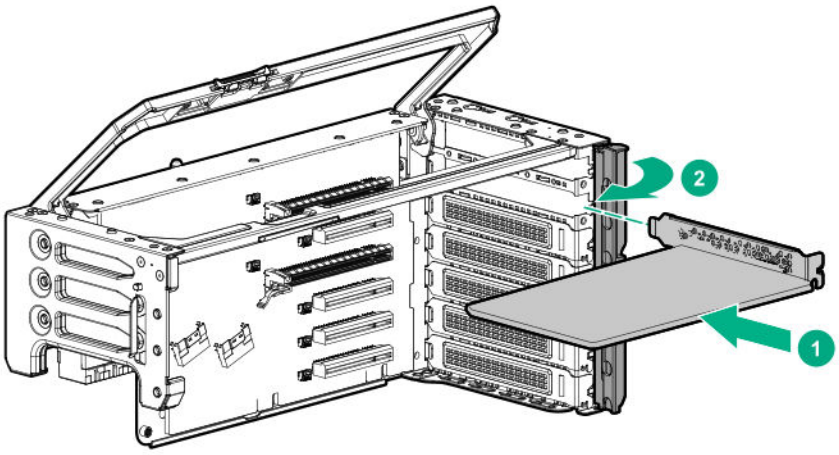

Two-processor configuration

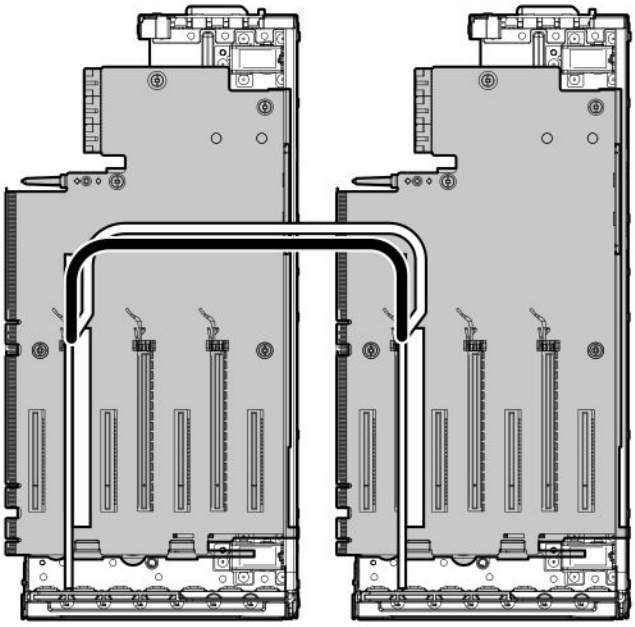

Four-processor configuration

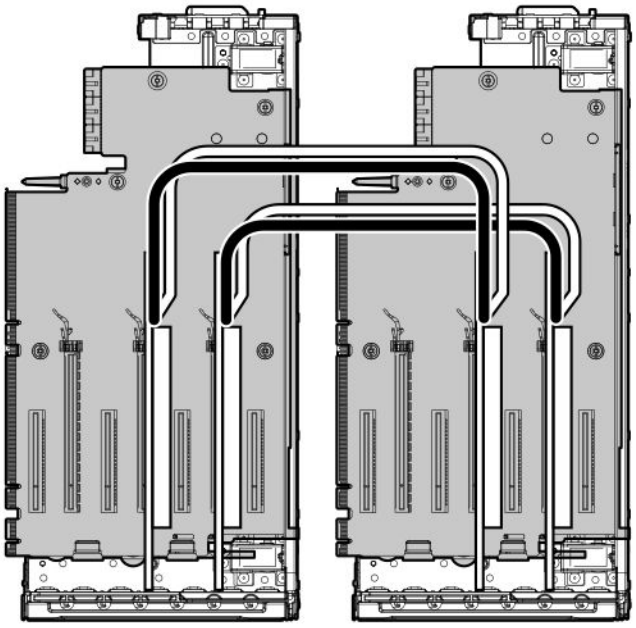

8. Install the riser cages.
9. Install the access panel.
10. Connect each power cord to the server.
11. Connect each power cord to the power source.
12. Power up the server.

Removing and replacing a GPU card

WARNING: To reduce the risk of personal injury, electric shock, or damage to the equipment, remove power from the server by removing the power cord. The front panel Power On/Standby button does not shut off system power. Portions of the power supply and some internal circuitry remain active until AC power is removed.

CAUTION: To prevent improper cooling or thermal damage, the server PCI slots must have an expansion slot blank or an expansion board installed.

Procedure

1. **Power down the server**.
2. Remove all power:

a. Disconnect each power cord from the power source.

b. Disconnect each power cord from the server.

3. Do one of the following:

   - Extend the server from the rack (**Extending the server from the rack**).
   - Remove the server from the rack (**Removing the server from the rack**).

4. Remove the access panel (**Removing the access panel**).

   CAUTION: Do not operate the server for long periods with the access panel open or removed. Operating the server in this manner results in improper airflow and improper cooling that can lead to thermal damage.

5. Disconnect all cables connected to the components installed in the riser cage.

6. Do one of the following:

   - Remove the primary PCIe cage (**Removing a primary PCIe riser cage**).
   - Remove the butterfly PCIe cage (**Removing a butterfly PCIe riser cage**).

7. Remove the GPU card.

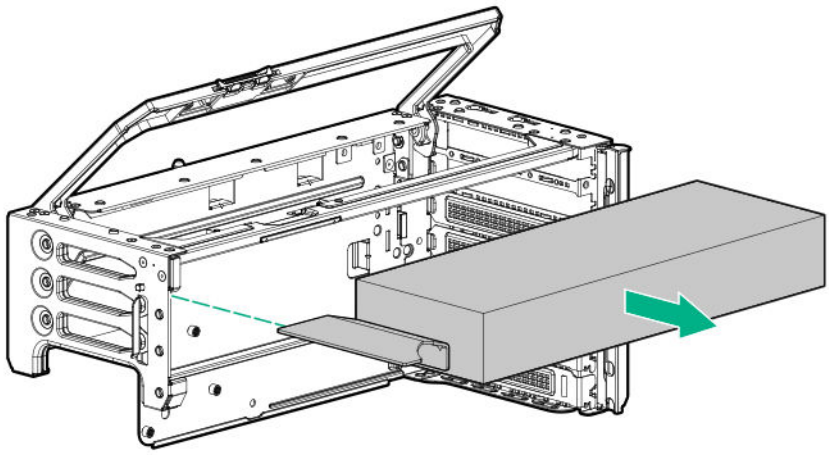

8. Remove the extender bracket from the GPU card. Retain the extender bracket for installation on the replacement GPU card.

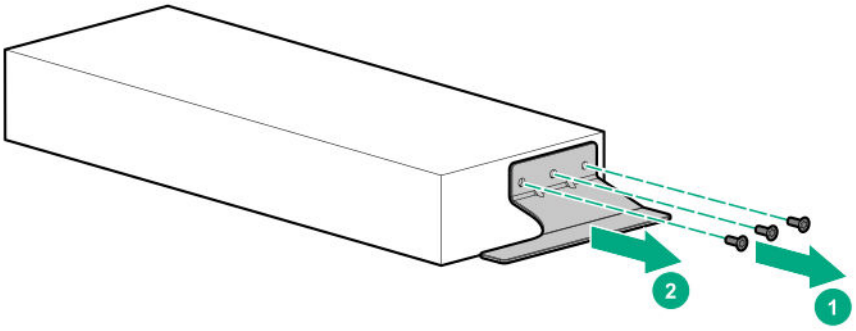

To replace the component, reverse the removal procedure.

CAUTION: Before installing the riser cage into the server, be sure that the power cables are routed and secured between the GPU card and the riser cage. Improper routing can result in damage to the cables and connectors.

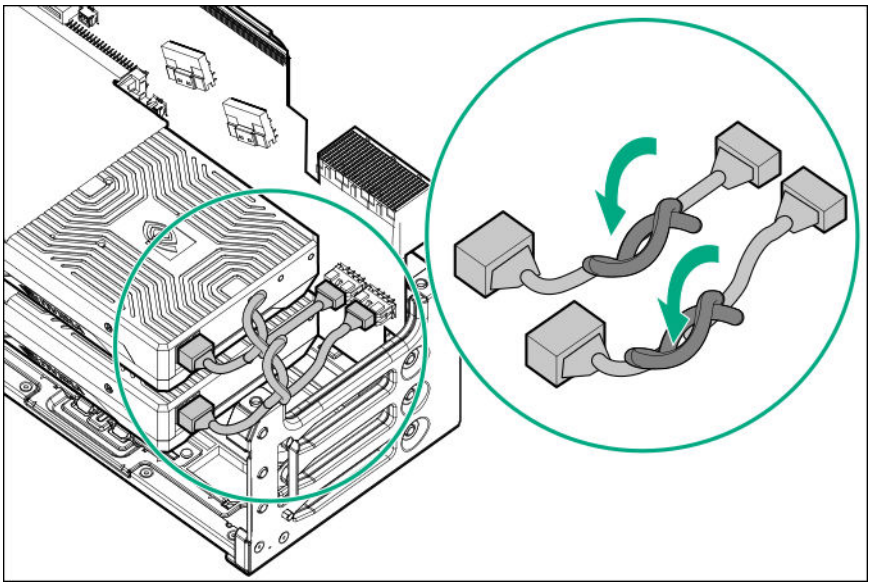

Removing and replacing a controller

Procedure

1. Back up all server data.
2. **Power down the server**.
3. Remove all power:
   a. Disconnect each power cord from the power source.
   b. Disconnect each power cord from the server.
4. Do one of the following:

- Extend the server from the rack (**Extending the server from the rack**).
- Remove the server from the rack (**Removing the server from the rack**).

5. Remove the access panel (**Removing the access panel**).

   CAUTION: Do not operate the server for long periods with the access panel open or removed. Operating the server in this manner results in improper airflow and improper cooling that can lead to thermal damage.

6. Disconnect all cables connected to the components installed in the riser cage.
7. Do one of the following:
   - Remove the primary PCIe cage (**Removing a primary PCIe riser cage**).
   - Remove the butterfly PCIe cage (**Removing a butterfly PCIe riser cage**).
8. Disconnect the controller backup power cable from the controller backup power connector on the riser board (**Riser board components**).

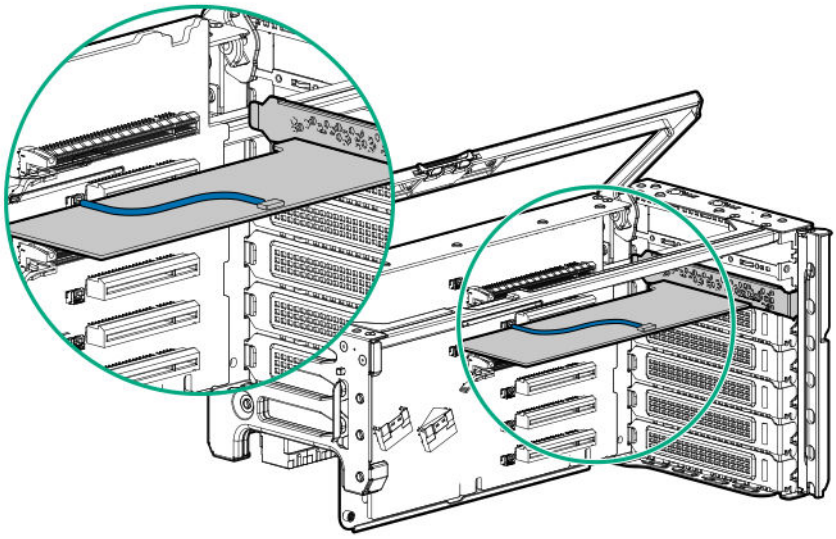

9. Remove the controller.

   The primary cage is shown. Your controller might appear different.

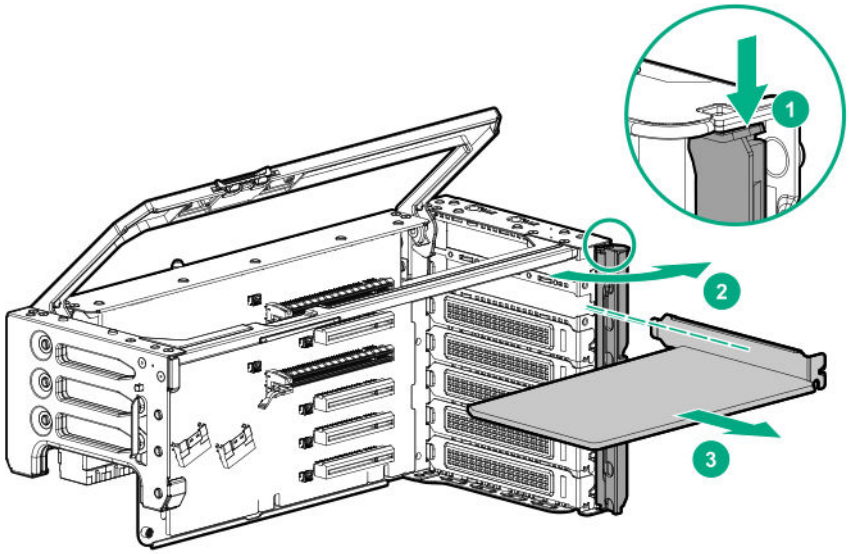

To replace the component, reverse the removal procedure.

IMPORTANT: After installing the new storage controller, configure it. For more information, see the user guide for your controller series on the Hewlett Packard Enterprise website (**http://www.hpe.com/info/smartstorage-docs**).

Removing and replacing a CPU Mezzanine UPI performance kit board

Procedure

1. **Power down the server**.
2. Remove all power:
   a. Disconnect each power cord from the power source.
   b. Disconnect each power cord from the server.
3. Do one of the following:
   - Extend the server from the rack (**Extending the server from the rack**).
   - Remove the server from the rack (**Removing the server from the rack**).
4. Remove the access panel (**Removing the access panel**).

   CAUTION: Do not operate the server for long periods with the access panel open or removed. Operating the server in this manner results in improper airflow and improper cooling that can lead to thermal damage.
5. Remove the primary PCIe riser cage (**Removing a primary PCIe riser cage**).
6. Remove the CPU Mezzanine UPI performance kit.

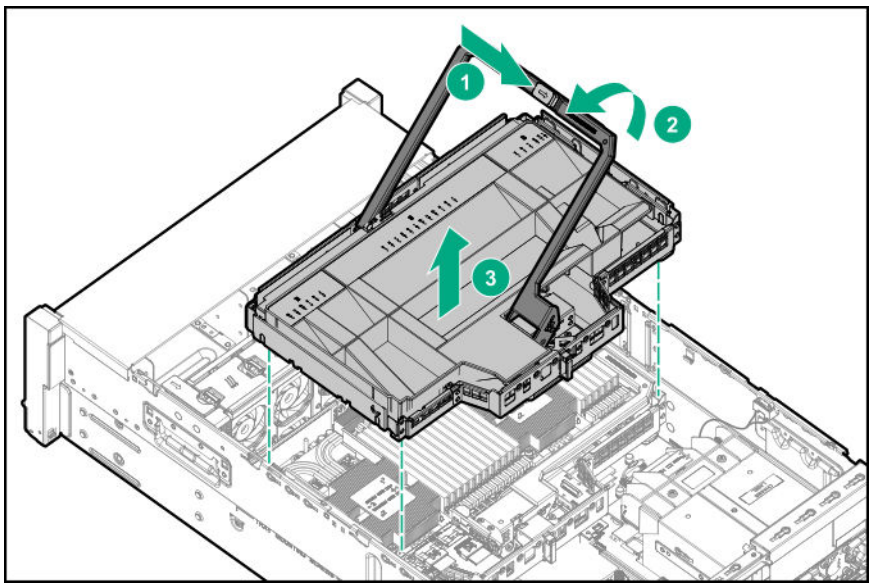

7. Remove the air baffle.

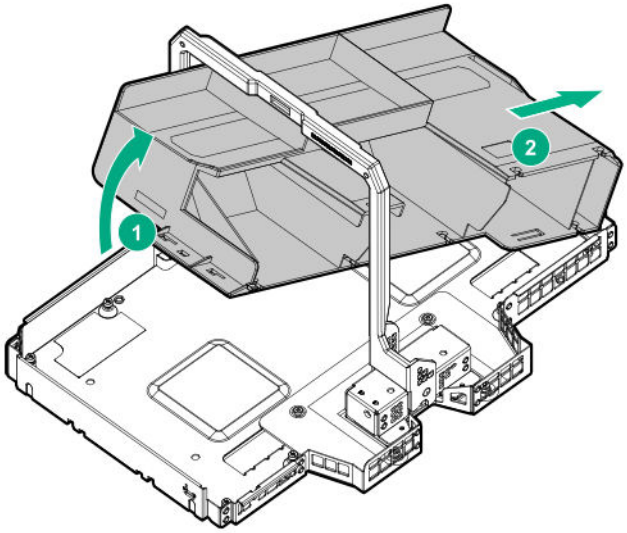

8. Remove the handle.

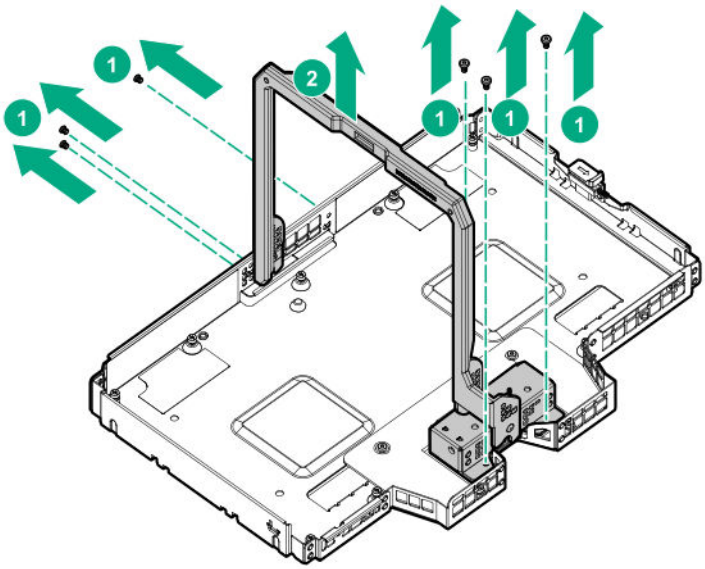

9. Remove the bracket to access the board, and then remove the board.

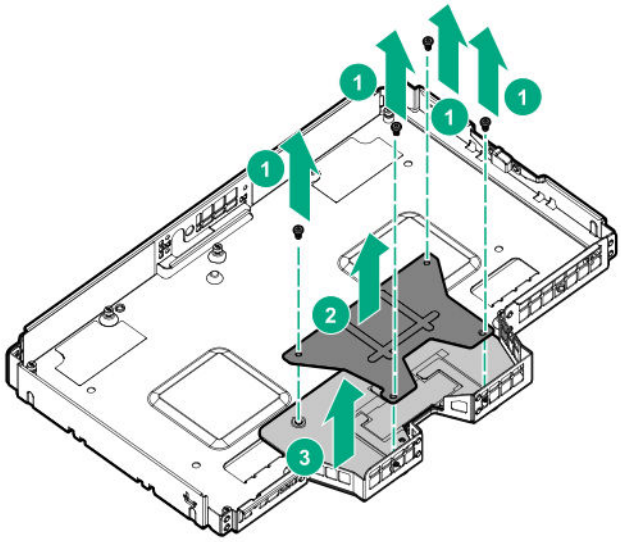

To replace the component, reverse the removal procedure.

Removing and replacing a power supply

CAUTION: All power supplies installed in the server must have the same output power capacity. Verify that all power supplies have the same part number and label color. The system becomes unstable and may shut down when it detects mismatched power supplies.

CAUTION: To prevent improper cooling and thermal damage, do not operate the server unless all device bays are populated with either a component or a blank.

Procedure

1. To access the rear panel, release the cable management arm (**Releasing the cable management arm**).
2. Disconnect the power cable connected to the power supply.
3. Remove the power supply.

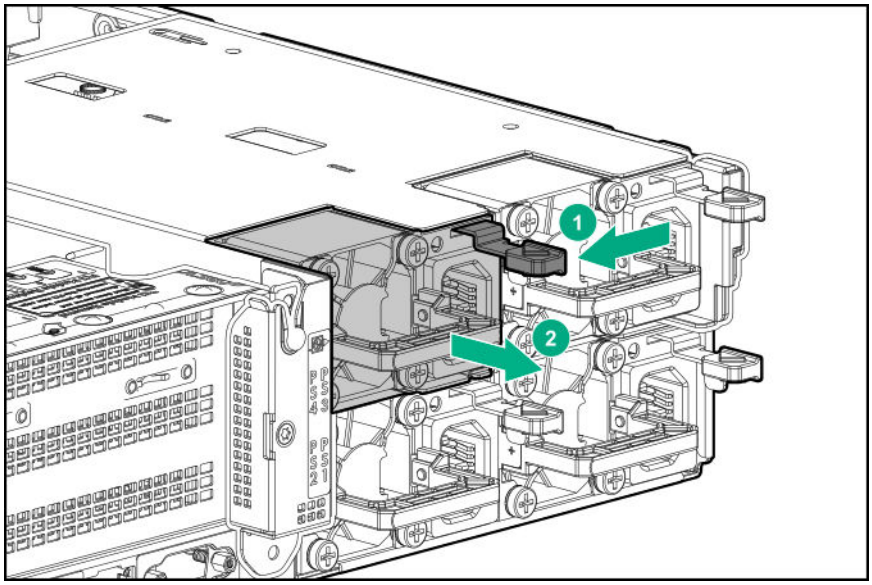

To replace the component, reverse the removal procedure.

Removing and replacing the power supply backplane

Procedure

1. **Power down the server**.
2. Remove all power:
   a. Disconnect each power cord from the power source.
   b. Disconnect each power cord from the server.
3. Do one of the following:
   - Extend the server from the rack (**Extending the server from the rack**).
   - Remove the server from the rack (**Removing the server from the rack**).
4. Remove the access panel (**Removing the access panel**).

   CAUTION: Do not operate the server for long periods with the access panel open or removed. Operating the server in this manner results in improper airflow and improper cooling that can lead to thermal damage.
5. Remove the power supplies (**Removing and replacing a power supply**).
6. Remove the power supply backplane.

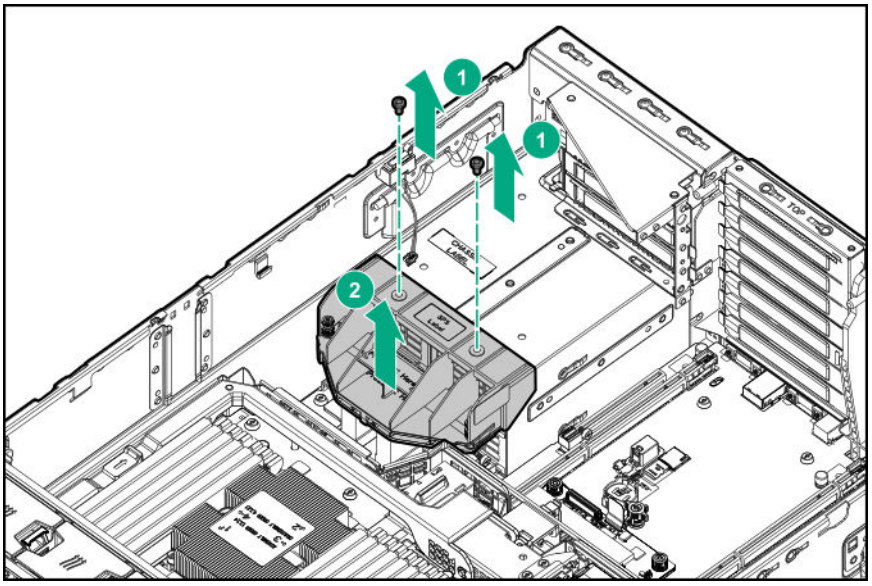

To replace the component, reverse the removal procedure.

Removing and replacing the FlexibleLOM

Procedure

1. **Power down the server**.
2. Remove all power:
   a. Disconnect each power cord from the power source.
   b. Disconnect each power cord from the server.
3. Do one of the following:
   - Extend the server from the rack (**Extending the server from the rack**).
   - Remove the server from the rack (**Removing the server from the rack**).
4. Remove the access panel (**Removing the access panel**).

   CAUTION: Do not operate the server for long periods with the access panel open or removed. Operating the server in this manner results in improper airflow and improper cooling that can lead to thermal damage.
5. Remove the primary PCIe riser cage (**Removing a primary PCIe riser cage**).
6. Remove the FlexibleLOM adapter.

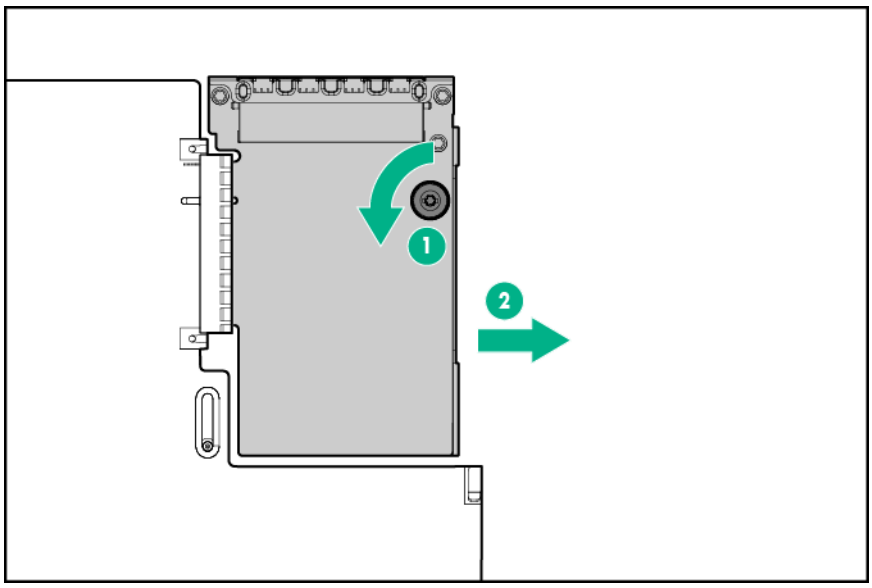

To replace the component, reverse the removal procedure.

HPE Smart Storage Battery

The HPE Smart Storage Battery supports the following devices:

- HPE Smart Array SR controllers
- HPE Smart Array MR controllers

A single 96 W battery can support up to 24 devices.

After the battery is installed, it might take up to two hours to charge. Controller features requiring backup power are not re-enabled until the battery is capable of supporting the backup power.

This server supports the 96 W HPE Smart Storage Battery with the 145 mm cable.

Removing and replacing an HPE Smart Storage Battery

NOTE: System ROM and firmware messages might display "energy pack" in place of "Smart Storage Battery." Energy pack refers to both HPE Smart Storage batteries and HPE Smart Storage Hybrid capacitors.

Procedure

1. **Power down the server**.
2. Remove all power:
   a. Disconnect each power cord from the power source.
   b. Disconnect each power cord from the server.
3. Do one of the following:

- Extend the server from the rack (**Extending the server from the rack**).
- Remove the server from the rack (**Removing the server from the rack**).

4. Remove the access panel (**Removing the access panel**).

   CAUTION: Do not operate the server for long periods with the access panel open or removed. Operating the server in this manner results in improper airflow and improper cooling that can lead to thermal damage.

5. Remove the primary PCIe riser cage (**Removing a primary PCIe riser cage**).
6. If installed, remove the butterfly riser cage (**Removing a butterfly PCIe riser cage**
7. Remove the fan cage (**Removing and replacing the fan cage**).
8. Remove the air baffle (**Removing the air baffle**).
9. If installed, remove the processor mezzanine tray (**Removing and replacing the processor mezzanine tray**).
10. Disconnect the HPE Smart Storage Battery cable from the system board.
11. Remove the HPE Smart Storage Battery.

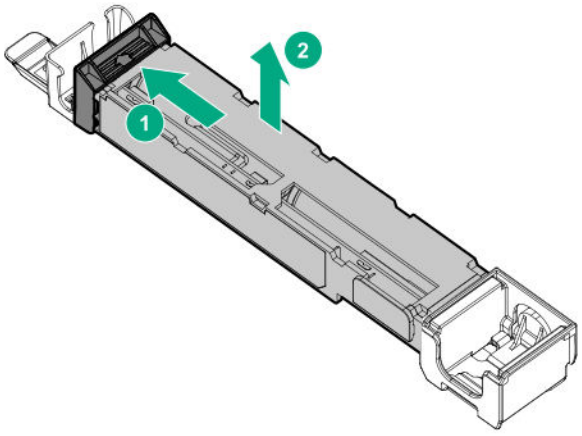

To replace the component, reverse the removal procedure.

Removing and replacing the secondary riser cage blank

Procedure

1. **Power down the server**.
2. Remove all power:
   a. Disconnect each power cord from the power source.
   b. Disconnect each power cord from the server.

3. Do one of the following:
   - Extend the server from the rack (**Extending the server from the rack**).
   - Remove the server from the rack (**Removing the server from the rack**).
4. Remove the access panel (**Removing the access panel**).

> **CAUTION:** Do not operate the server for long periods with the access panel open or removed. Operating the server in this manner results in improper airflow and improper cooling that can lead to thermal damage.

5. Remove the secondary riser cage blank.

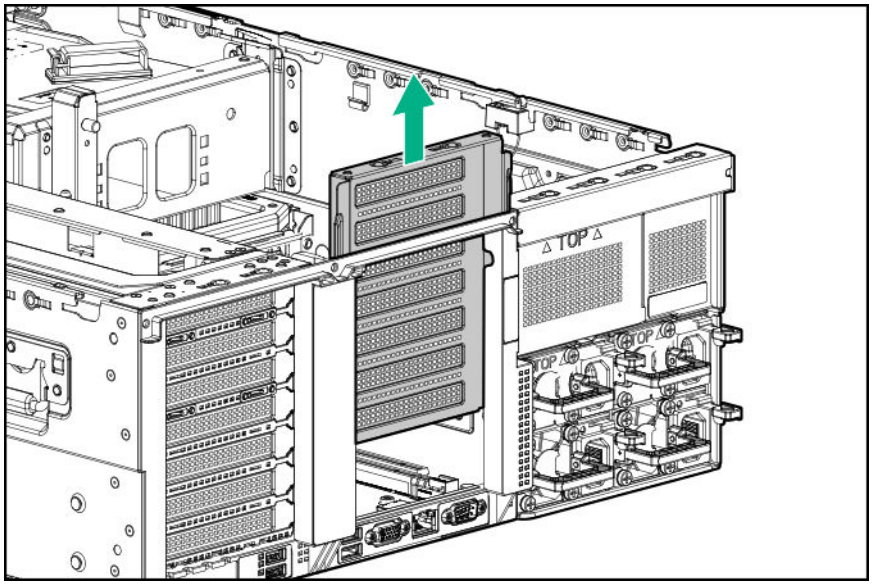

To replace the component, reverse the removal procedure.

Removing and replacing a tertiary riser cage blank

Procedure

1. **Power down the server**.
2. Remove all power:
   a. Disconnect each power cord from the power source.
   b. Disconnect each power cord from the server.
3. Do one of the following:
   - Extend the server from the rack (**Extending the server from the rack**).
   - Remove the server from the rack (**Removing the server from the rack**).
4. Remove the access panel (**Removing the access panel**).

CAUTION: Do not operate the server for long periods with the access panel open or removed. Operating the server in this manner results in improper airflow and improper cooling that can lead to thermal damage.

5. Remove the tertiary riser cage blank.

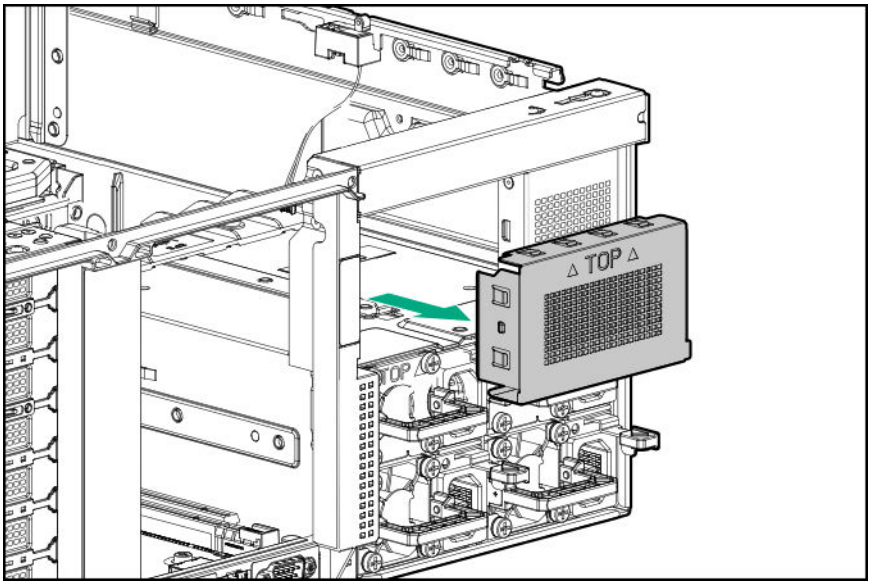

To replace the component, reverse the removal procedure.

Removing and replacing an intrusion detection switch

Procedure

1. **Power down the server**.
2. Remove all power:
   a. Disconnect each power cord from the power source.
   b. Disconnect each power cord from the server.
3. Do one of the following:
   - Extend the server from the rack (**Extending the server from the rack**).
   - Remove the server from the rack (**Removing the server from the rack**).
4. Remove the access panel (**Removing the access panel**).

CAUTION: Do not operate the server for long periods with the access panel open or removed. Operating the server in this manner results in improper airflow and improper cooling that can lead to thermal damage.

5. Remove the intrusion detection switch.

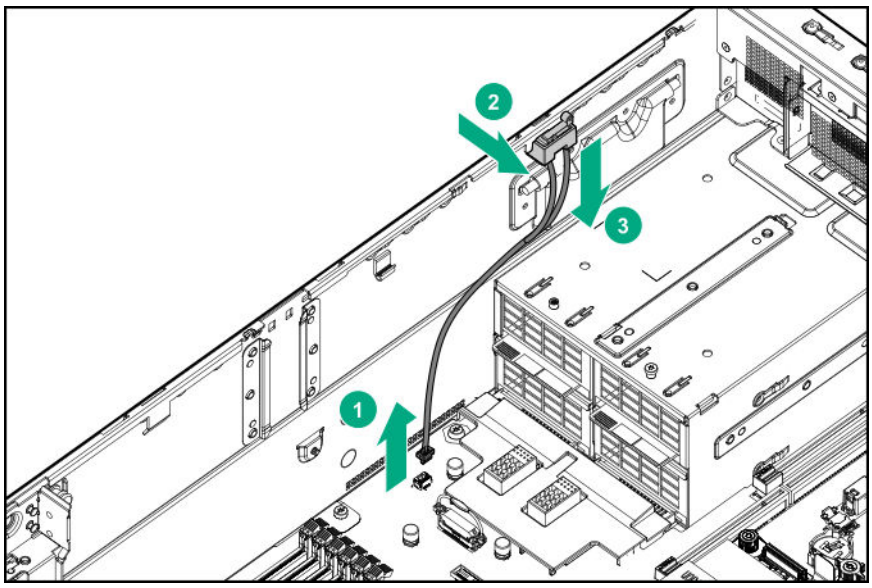

To replace the component, reverse the removal procedure.

Replacing the system battery

The system battery provides power to the internal clock. If the server no longer automatically displays the correct date and time, you might need to replace the system battery.

WARNING: The computer contains an internal lithium manganese dioxide, a vanadium pentoxide, or an alkaline battery pack. A risk of fire and burns exists if the battery pack is not properly handled. To reduce the risk of personal injury:

- Do not attempt to recharge the battery.
- Do not expose the battery to temperatures higher than 60°C (140°F).
- Do not expose the battery to extremely low air pressure as it might lead to explosion or leakage of flammable liquid or gas.
- Do not disassemble, crush, puncture, short external contacts, or dispose of in fire or water.
- Replace only with the spare designated for this product.

Procedure

1. **Power down the server**.
2. Remove all power:
   a. Disconnect each power cord from the power source.
   b. Disconnect each power cord from the server.
3. Do one of the following:
   - Extend the server from the rack (**Extending the server from the rack**).
   - Remove the server from the rack (**Removing the server from the rack**).

4. Remove the access panel (**Removing the access panel**).

   CAUTION: Do not operate the server for long periods with the access panel open or removed. Operating the server in this manner results in improper airflow and improper cooling that can lead to thermal damage.

5. If installed, remove the butterfly riser cage (**Removing a butterfly PCIe riser cage**).
6. Locate the battery (**System board components**).
7. Remove the battery.

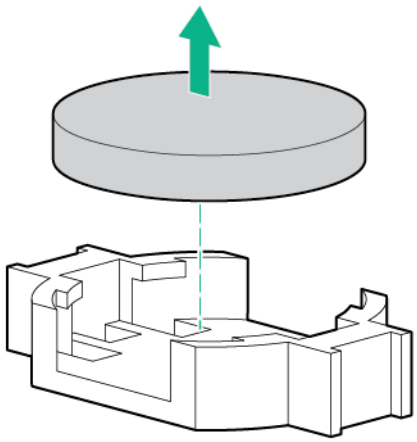

   To replace the component, reverse the removal procedure.

8. Properly dispose of the old battery.

   For more information about battery replacement or proper disposal, contact an authorized reseller or an authorized service provider.

Removing and replacing a system board

Prerequisites

If persistent memory modules are installed in the server and are encrypted with local key management, do one of the following:

- Manually retrieve the persistent memory module passwords from the server (user-generated passwords only)
- Export a password file to a USB key.

  Hewlett Packard Enterprise recommends exporting the password file to a USB key.

For more information, see the *Intel Optane persistent memory 100 series for HPE User Guide* on the Hewlett Packard Enterprise website (**https://www.hpe.com/info/persistentmemory-docs**).

Procedure

Removing the system board

1. **Power down the server**.
2. Remove all power:

a. Disconnect each power cord from the power source.

b. Disconnect each power cord from the server.

3. Do one of the following:

   - Extend the server from the rack (**Extending the server from the rack**).
   - Remove the server from the rack (**Removing the server from the rack**).

4. Remove the access panel (**Removing the access panel**).

   CAUTION: Do not operate the server for long periods with the access panel open or removed. Operating the server in this manner results in improper airflow and improper cooling that can lead to thermal damage.

5. Remove the primary PCIe riser cage (**Removing a primary PCIe riser cage**).
6. If installed, remove the butterfly PCIe riser cage (**Removing a butterfly PCIe riser cage**).
7. Remove the air baffle (**Removing the air baffle**).
8. If installed, do one of the following:

   - Remove the processor mezzanine tray (**Removing and replacing the processor mezzanine tray**).
   - Remove the CPU Mezzanine UPI performance kit (**Removing and replacing a CPU Mezzanine UPI performance kit board**).

9. Remove the fan cage (**Removing and replacing the fan cage**).
10. Remove the DIMMs installed on the system board (**Removing and replacing a DIMM**).

    Be sure to note the DIMM slot locations in which each DIMM is installed. These components must be installed in the same locations on the new system board.

11. Remove the persistent memory modules installed on the system board (**Removing and replacing a persistent memory module**).

    Be sure to note the DIMM slot locations in which each persistent memory module is installed. These components must be installed in the same locations on the new system board.

12. Remove the processor heatsink module:

    a. Allow the heatsink to cool.

    b. Loosen the heatsink nuts in the order specified by the label on the heatsink (4 - 3 - 2 - 1).

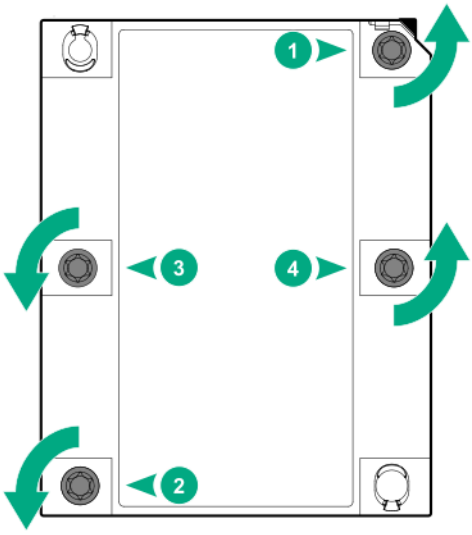

c. Lift the processor heatsink module up and away from the system board.

d. Turn the module over and place it on a work surface with the processor facing up.

e. Install the dust cover.

13. Remove the Smart Storage batteries (**Removing and replacing an HPE Smart Storage Battery**).

14. Remove the power supplies (**Removing and replacing a power supply**).

15. Remove the power supply backplane (**Removing and replacing the power supply backplane**).

16. Remove the FlexLOM (**Removing and replacing the FlexibleLOM**).

17. Disconnect all cables connected to the system board.

18. Remove the system board.

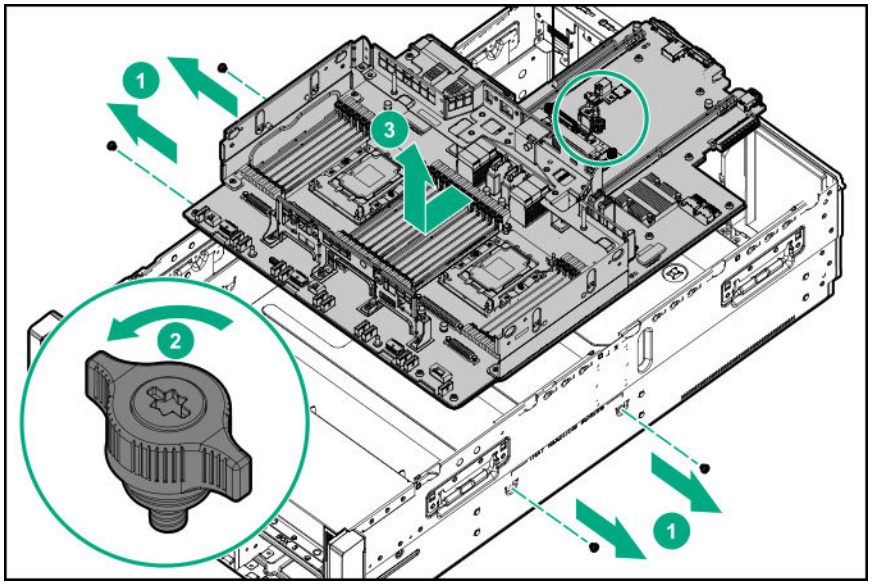

Replacing the system board

19. Install the spare system board.

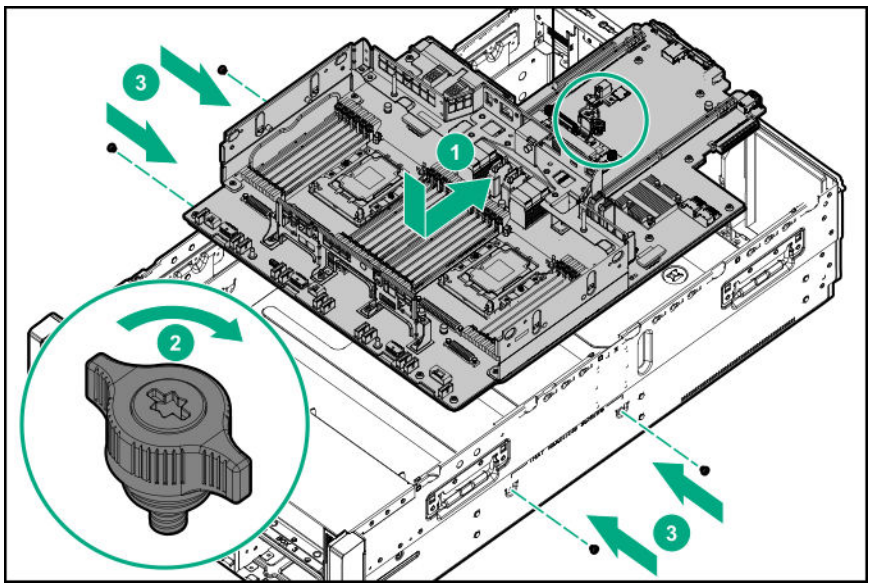

20. Install the processor heatsink assembly:

a. Locate the Pin 1 indicator on the processor carrier and the socket.

b. Align the processor heatsink assembly with the heatsink alignment pins and gently lower it down until it sits evenly on the socket.

The heatsink alignment pins are keyed. The processor heatsink assembly will only install one way.

Your heatsink may look different than the one shown.

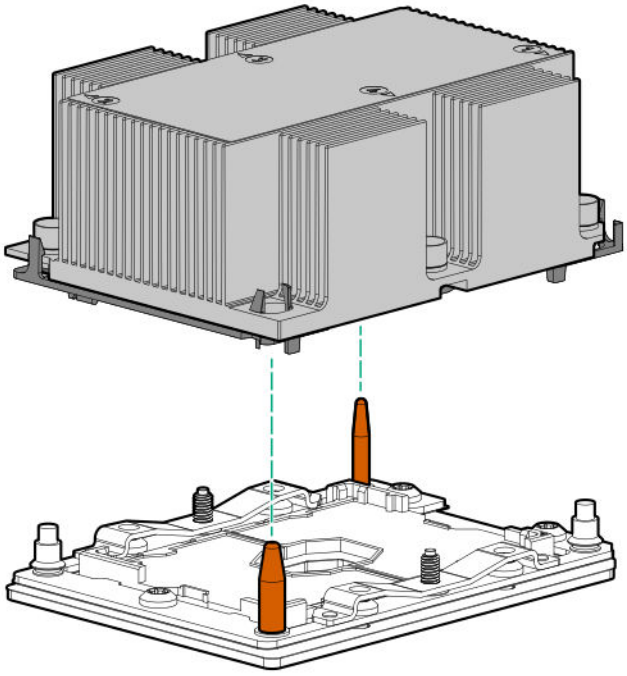

CAUTION: Be sure to tighten each heatsink nut fully in the order indicated. Otherwise, boot failure or intermittent shutdowns might occur.

c. Using a T-30 Torx screwdriver, fully tighten each heatsink nuts in the order indicated on the heatsink label (1 -2 -3 -4) until it no longer turns.

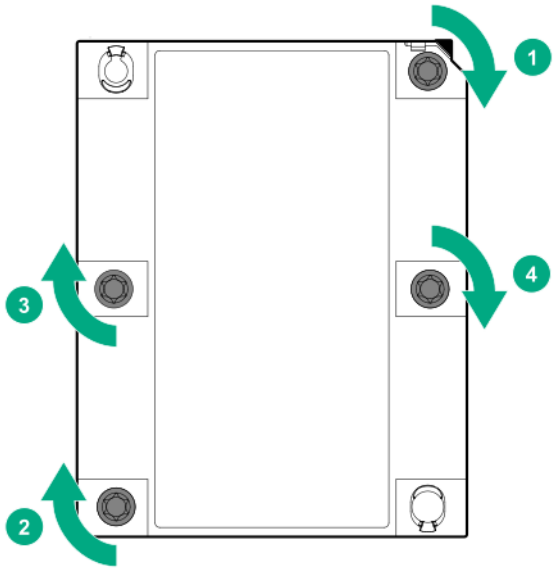

21. Install all components removed from the failed system board.

    Be sure to install the DIMMs and persistent memory modules in the same DIMM slots as the failed system board.

22. Install the access panel.

23. Install the power supplies.

24. Connect the power cord to the power supply.

CAUTION: Connect the power cords using only the following supported configurations. Using an unsupported power supply or cabling configuration can result in an unexpected loss of system power.

- Two power supply configuration—For redundancy, connect power supplies 1 and 2 to separate AC power circuits.

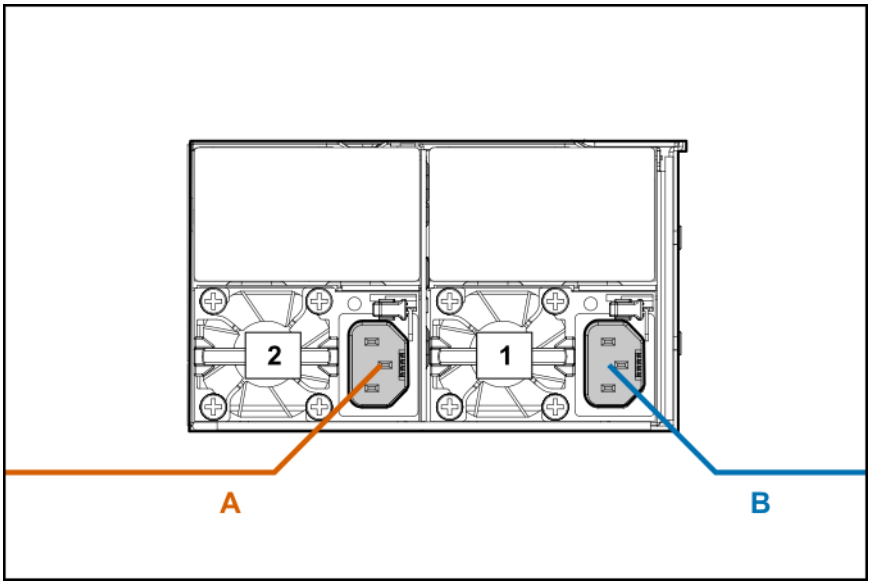

- Four power supply configuration—For redundancy, connect power supplies 1 and 2 to power circuit A, and then connect power supplies 3 and 4 to power circuit B.

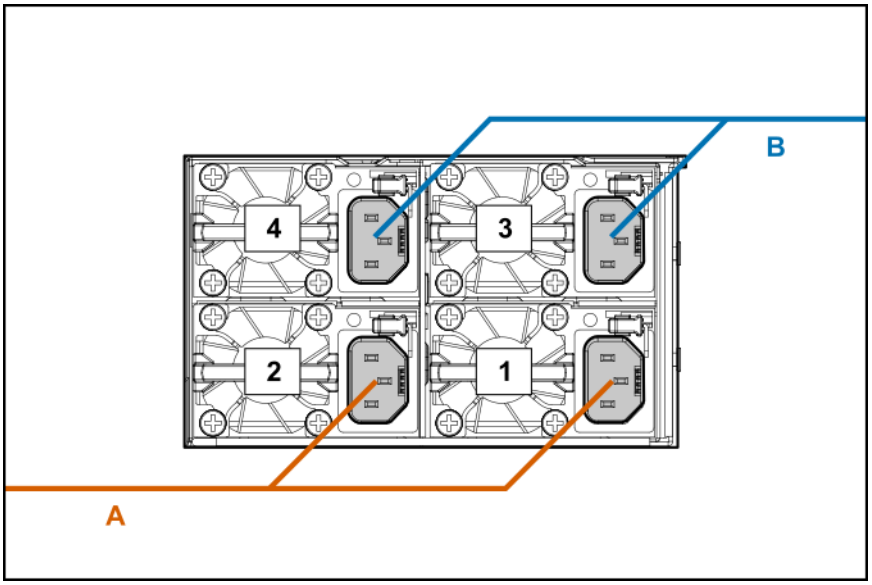

25. Power up the server.
26. Ensure all firmware, including option cards and embedded devices, is updated to the same versions to ensure that the latest drivers are being used.
27. Re-enter any Secure Boot Keys that were previously added in the Secure Boot configuration.
28. Re-enter the server serial number and the product ID (**Re-entering the server serial number and product ID**).
29. Set the server power supply requirements (**Setting the server power supply requirements**).
30. Review the persistent memory configuration of the server.

    For more information, see **Configuring the server for Intel Optane persistent memory 100 series for HPE**.
31. Do one of the following:

- If persistent memory modules are encrypted with local key management, either manually enter the persistent memory module passwords in the System Utilities or import the password file from the USB key.
- If persistent memory modules are encrypted with remote key management, enroll the server iLO in the key management server to provide access to the data on the persistent memory modules.

For more information, see the *Intel Optane persistent memory 100 series for HPE User Guide* on the Hewlett Packard Enterprise website (**https://www.hpe.com/info/persistentmemory-docs**).

Re-entering the server serial number and product ID

After replacing the system board, re-enter the system serial number and product ID, and configure the date and time settings.

Procedure

1. Access the UEFI System Utilities. During POST, press **F9**.
2. From the **System Utilities** screen, select **System Configuration** > **BIOS/Platform Configuration (RBSU)** > **Advanced Options** > **Advanced Service Options**.
3. Select **Serial Number**, and then press **Enter**.

   The following warning appears:

   ```
   The serial number is modified by qualified service personnel and must match the serial number located on the chassis.
   ```

4. Click **OK**.
5. Type the serial number, and then press **Enter**.
6. Select **Product ID**, and then press **Enter**.

   The following warning appears:

   ```
   Product ID is modified only by qualified service personnel. This value must match the product ID located on the chassis.
   ```

7. Type the product ID, and then press **Enter**.
8. From the **System Utilities** screen, select **System Configuration** > **BIOS/Platform Configuration (RBSU)** > **Date and Time**.
9. Configure the date and time settings:
   - **Date (mm-dd-yyyy)**—Enter the date in a month-day-year (mm-dd-yyyy) format.
   - **Time (hh:mm:ss)**—Enter the time in a 24-hour format (hh:mm:ss) format.
   - **Hour Format**—Select either a 12- or 24-hours format. (This menu is supported in Gen10 Plus and later servers.)
   - **Time Format**
     - **Coordinated Universal Time (UTC)**—Calculates the time stored in the hardware real-time clock (RTC) from the associated **Time Zone** setting.
     - **Local Time**—Removes the use of the **Time Zone** setting. This option is useful for addressing interaction issues in Windows operating systems set in legacy BIOS boot mode.
     - **Time Zone**—Select the time zone for the system.
     - **Daylight Savings Time**—Select whether to enable DST in the system time setting.
10. To confirm and save the settings, press **F12**.

The server automatically reboots.

The installation is complete.

Setting the server power supply requirements

The server supports four power supply redundancy modes in UEFI System Utilities. To determine if your current server hardware configuration can support a specific redundancy setting, use the HPE Power Advisor on the Hewlett Packard Enterprise website (**http://www.hpe.com/info/poweradvisor/online**).

- **1 + 1 Redundancy**—In a two-power supply configuration, the server will continue to operate if one power supply fails. This mode is not applicable in a four-power supply configuration.
- **2 + 2 Redundancy**—In a four-power supply configuration, the server will continue to operate if two power supplies fail or if one AC feed loses power.
- **3 + 1 Redundancy**—In a four-power supply configuration, the server will continue to operate if a single power supply fails. The server will initiate operating system shutdown if two power supplies fail. No AC power redundancy is possible.
- **4 + 0 Redundancy**—In a four-power supply configuration, there is no power supply redundancy. The server consumes more power than what redundancy can supply, and will initiate operating system shutdown if one or more power supplies fail.

By default, the server is configured for 2 + 2 power redundancy.

To verify that the server is cabled properly for AC power redundancy, see **Removing and replacing a system board**.

Procedure

1. Use the HPE Power Advisor (**http://www.hpe.com/info/poweradvisor/online**) to determine the power draw of the system and verify that the server will continue to operate redundantly in the default configuration.

   To change the redundancy setting in the UEFI System Utilities, proceed with the following steps.
2. To access the UEFI System Utilities, press **F9** during POST.
3. From the **System Utilities** screen, select **System Configuration** > **BIOS/Platform Configuration (RBSU)** > **Advanced Options**.
4. Select the appropriate redundancy configuration from the **Power Supply Requirements** menu, and then press **Enter**.
5. Press **F10** to Save or **F12** to Save and Exit.

HPE Trusted Platform Module 2.0 Gen10 Option

The HPE Trusted Platform Module 2.0 Gen10 Option is not a customer-removable part.

CAUTION: If the TPM is removed from the original server and powered up on a different server, data stored in the TPM including keys will be erased.

If you suspect a TPM board failure, leave the TPM installed and remove the system board. Contact a Hewlett Packard Enterprise authorized service provider for a replacement system board and TPM board.

Troubleshooting

Troubleshooting resources

Troubleshooting resources are available for HPE Gen10 and Gen10 Plus server products in the following documents:

- *Troubleshooting Guide for HPE ProLiant Gen10 and Gen10 Plus servers* provides procedures for resolving common problems and comprehensive courses of action for fault isolation and identification, issue resolution, and software maintenance.
- *Error Message Guide for HPE ProLiant Gen10 servers and HPE Synergy* provides a list of error messages and information to assist with interpreting and resolving error messages.
- *Integrated Management Log Messages and Troubleshooting Guide for HPE ProLiant Gen10 and Gen10 Plus servers and HPE Synergy* provides IML messages and associated troubleshooting information to resolve critical and cautionary IML events.

To access troubleshooting resources for your product, see the **Hewlett Packard Enterprise website**.

Diagnostic tools

Product QuickSpecs

For more information about product features, specifications, options, configurations, and compatibility, see the product QuickSpecs on the Hewlett Packard Enterprise website (**https://www.hpe.com/info/qs**).

UEFI System Utilities

The UEFI System Utilities is embedded in the system ROM. Its features enable you to perform a wide range of configuration activities, including:

- Configuring system devices and installed options.
- Enabling and disabling system features.
- Displaying system information.
- Selecting the primary boot controller or partition.
- Configuring memory options.
- Launching other preboot environments.

HPE servers with UEFI can provide:

- Support for boot partitions larger than 2.2 TB. Such configurations could previously only be used for boot drives when using RAID solutions.
- Secure Boot that enables the system firmware, option card firmware, operating systems, and software collaborate to enhance platform security.
- UEFI Graphical User Interface (GUI)
- An Embedded UEFI Shell that provides a preboot environment for running scripts and tools.
- Boot support for option cards that only support a UEFI option ROM.

Selecting the boot mode

This server provides two **Boot Mode** configurations: UEFI Mode and Legacy BIOS Mode. Certain boot options require that you select a specific boot mode. By default, the boot mode is set to **UEFI Mode**. The system must boot in **UEFI Mode** to use certain options, including:

- Secure Boot, UEFI Optimized Boot, Generic USB Boot, IPv6 PXE Boot, iSCSI Boot, NVMe Boot and Boot from URL
- Fibre Channel/FCoE Scan Policy

NOTE: The boot mode you use must match the operating system installation. If not, changing the boot mode can impact the ability of the server to boot to the installed operating system.

Prerequisite

When booting to **UEFI Mode**, leave **UEFI Optimized Boot** enabled.

Procedure

1. From the **System Utilities** screen, select **System Configuration** > **BIOS/Platform Configuration (RBSU)** > **Boot Options** > **Boot Mode**.
2. Select a setting.
   - **UEFI Mode** (default)—Configures the system to boot to a UEFI compatible operating system.
   - **Legacy BIOS Mode**—Configures the system to boot to a traditional operating system in Legacy BIOS compatibility mode.
3. Save your setting.
4. Reboot the server.

Secure Boot

Secure Boot is a server security feature that is implemented in the BIOS and does not require special hardware. Secure Boot ensures that each component launched during the boot process is digitally signed and that the signature is validated against a set of trusted certificates embedded in the UEFI BIOS. Secure Boot validates the software identity of the following components in the boot process:

- UEFI drivers loaded from PCIe cards
- UEFI drivers loaded from mass storage devices
- Preboot UEFI Shell applications
- OS UEFI boot loaders

When Secure Boot is enabled:

- Firmware components and operating systems with boot loaders must have an appropriate digital signature to execute during the boot process.
- Operating systems must support Secure Boot and have an EFI boot loader signed with one of the authorized keys to boot. For more information about supported operating systems, see **https://www.hpe.com/servers/ossupport**.

You can customize the certificates embedded in the UEFI BIOS by adding or removing your own certificates, either from a management console directly attached to the server, or by remotely connecting to the server using the iLO Remote Console.

You can configure Secure Boot:

- Using the **System Utilities** options described in the following sections.
- Using the iLO RESTful API to clear and restore certificates. For more information, see the Hewlett Packard Enterprise website (**https://www.hpe.com/info/redfish**).
- Using the `secboot` command in the Embedded UEFI Shell to display Secure Boot databases, keys, and security reports.

Launching the Embedded UEFI Shell

Use the **Embedded UEFI Shell** option to launch the Embedded UEFI Shell. The Embedded UEFI Shell is a preboot command-line environment for scripting and running UEFI applications, including UEFI boot loaders. The Shell also provides CLI-based commands you can use to obtain system information, and to configure and update the system BIOS.

Prerequisites

Embedded UEFI Shell is set to **Enabled**.

Procedure

1. From the **System Utilities** screen, select **Embedded Applications** > **Embedded UEFI Shell**.

   The **Embedded UEFI Shell** screen appears.

2. Press any key to acknowledge that you are physically present.

   This step ensures that certain features, such as disabling **Secure Boot** or managing the **Secure Boot** certificates using third-party UEFI tools, are not restricted.

3. If an administrator password is set, enter it at the prompt and press **Enter**.

   The `Shell>` prompt appears.

4. Enter the commands required to complete your task.

5. Enter the `exit` command to exit the Shell.

iLO Service Port

When you have physical access to a server, you can use the Service Port to do the following:

- Download the Active Health System Log to a supported USB flash drive.

  When you use this feature, the connected USB flash drive is not accessible by the host operating system.

- Connect a client (such as a laptop) with a supported USB to Ethernet adapter to access the following:
  - iLO web interface
  - Remote console
  - iLO RESTful API
  - CLI

When you use the iLO Service Port:

- Actions are logged in the iLO event log.
- The server UID flashes to indicate the Service Port status.

  You can also retrieve the Service Port status by using a REST client and the iLO RESTful API.

- You cannot use the Service Port to boot any device within the server, or the server itself.
- You cannot access the server by connecting to the Service Port.
- You cannot access the connected device from the server.

Intelligent Provisioning

Intelligent Provisioning is a single-server deployment tool embedded in ProLiant servers and HPE Synergy compute modules. Intelligent Provisioning simplifies server setup, providing a reliable and consistent way to deploy servers.

Intelligent Provisioning prepares the system for installing original, licensed vendor media and Hewlett Packard Enterprise-branded versions of OS software. Intelligent Provisioning also prepares the system to integrate optimized server support software from the Service Pack for ProLiant (SPP). SPP is a comprehensive systems software and firmware solution for ProLiant servers, server blades, their enclosures, and HPE Synergy compute modules. These components are preloaded with a basic set of firmware and OS components that are installed along with Intelligent Provisioning.

IMPORTANT: HPE ProLiant XL servers do not support operating system installation with Intelligent Provisioning, but they do support the maintenance features. For more information, see "Performing Maintenance" in the Intelligent Provisioning user guide and online help.

After the server is running, you can update the firmware to install additional components. You can also update any components that have been outdated since the server was manufactured.

To access Intelligent Provisioning:

- Press **F10** from the POST screen and enter Intelligent Provisioning .
- From the iLO web interface using **Lifecycle Management**. **Lifecycle Management** allows you to access Intelligent Provisioning without rebooting your server.

Intelligent Provisioning operation

NOTE: Intelligent Provisioning 3.62 and later requires iLO firmware version 2.44 or later.

Intelligent Provisioning includes the following components:

- Critical boot drivers
- Active Health System (AHS)
- Erase Utility
- Deployment Settings

IMPORTANT:

- Although your server is preloaded with firmware and drivers, Hewlett Packard Enterprise recommends updating the firmware upon initial setup. Also, downloading and updating the latest version of Intelligent Provisioning ensures the latest supported features are available.
- For ProLiant servers, firmware is updated using the Intelligent Provisioning Firmware Update utility.
- Do not update firmware if the version you are currently running is required for compatibility.

NOTE: Intelligent Provisioning does not function within multihomed configurations. A multihomed host is one that is connected to two or more networks or has two or more IP addresses.

Intelligent Provisioning provides installation help for the following operating systems:

- Microsoft Windows Server
- Red Hat Enterprise Linux
- SUSE Linux Enterprise Server
- VMware ESXi/vSphere Custom Image
- ClearOS

Not all versions of an OS are supported. For information about specific versions of a supported operating system, see the OS Support Matrix on the Hewlett Packard Enterprise website (**https://www.hpe.com/info/ossupport**).

HPE Insight Remote Support

Hewlett Packard Enterprise strongly recommends that you register your device for remote support to enable enhanced delivery of your Hewlett Packard Enterprise warranty, HPE support services, or Hewlett Packard Enterprise contractual support agreement. Insight Remote Support supplements your monitoring continuously to ensure maximum system availability by providing intelligent event diagnosis, and automatic, secure submission of hardware event notifications to Hewlett Packard Enterprise, which will initiate a fast and accurate resolution, based on your product's service level. Notifications can be sent to your authorized Hewlett Packard Enterprise Channel Partner for onsite service, if configured and available in your country.

For more information, see *Insight Remote Support and Insight Online Setup Guide for ProLiant Servers and BladeSystem c-Class Enclosures* on the **Hewlett Packard Enterprise website**. Insight Remote Support is available as part of Hewlett Packard Enterprise Warranty, HPE support services, or Hewlett Packard Enterprise contractual support agreement.

HPE InfoSight for servers

The HPE InfoSight portal is a secure web interface hosted by HPE that allows you to monitor supported devices through a graphical interface.

HPE InfoSight for servers:

- Combines the machine learning and predictive analytics of HPE InfoSight with the health and performance monitoring of Active Health System (AHS) and HPE iLO to optimize performance and predict and prevent problems
- Provides automatic collection and analysis of the sensor and telemetry data from AHS to derive insights from the behaviors of the install base to provide recommendations to resolve problems and improve performance

For more information on getting started and using HPE InfoSight for servers, go to: **https://www.hpe.com/info/infosight-servers-docs**.

USB support

Hewlett Packard Enterprise Gen10 and Gen10 Plus servers support all USB operating speeds depending on the device that is connected to the server.

External USB functionality

Hewlett Packard Enterprise provides external USB support to enable local connection of USB devices for server administration, configuration, and diagnostic procedures.

For additional security, external USB functionality can be disabled through USB options in UEFI System Utilities.

HPE Smart Storage Administrator

HPE SSA is the main tool for configuring arrays on HPE Smart Array SR controllers. It exists in three interface formats: the HPE SSA GUI, the HPE SSA CLI, and HPE SSA Scripting. All formats provide support for configuration tasks. Some of the advanced tasks are available in only one format.

The diagnostic features in HPE SSA are also available in the standalone software HPE Smart Storage Administrator Diagnostics Utility CLI.

During the initial provisioning of the server or compute module, an array is required to be configured before the operating system can be installed. You can configure the array using SSA.

HPE SSA is accessible both offline (either through HPE Intelligent Provisioning or as a standalone bootable ISO image) and online:

- Accessing HPE SSA in the offline environment

  IMPORTANT: If you are updating an existing server in an offline environment, obtain the latest version of HPE SSA through Service Pack for ProLiant before performing configuration procedures.

  Using one of multiple methods, you can run HPE SSA before launching the host operating system. In offline mode, users can configure or maintain detected and supported devices, such as optional Smart Array controllers and integrated Smart Array controllers. Some HPE SSA features are only available in the offline environment, such as setting the boot controller and boot volume.

- Accessing HPE SSA in the online environment

  This method requires an administrator to download the HPE SSA executables and install them. You can run HPE SSA online after launching the host operating system.

For more information, see HPE SSA online help.

HPE MR Storage Administrator

HPE MR Storage Administrator is a web-based application that enables you to monitor, configure, maintain, and troubleshoot the HPE MegaRAID MR controller. MR Storage Administrator enables you to view, create, and manage storage configurations.

IMPORTANT: The HPE MR Storage Administrator manages **only** the MR controllers. It does not manage SR controllers.

- **Monitoring and configuring**: MR Storage Administrator enables you to monitor the controllers and configure the drives on the controller. It displays the status of the controller cards, logical drives, and drives on the controller. The device status icons notify you if there are drive failures and other events that require your immediate attention. Email notifications about the status of the server are sent based on your alert settings. The system errors and events are recorded and displayed in an event log file. You can also import or clear foreign configurations.

  IMPORTANT: Limited alerting and monitoring is available through iLO when HPE Agentless Management Service is installed. This controller supports limited alerts through iLO using the AMS agent.

- **Maintaining**: Using MR Storage Administrator, you can perform system maintenance tasks, such as updating the controller firmware.
- **Troubleshooting**: MR Storage Administrator displays information related to drive failures, device failures, and other issues. It also provides recommendations and displays contextual links, helping you to locate the drives/devices that have issues and troubleshoot them. You can also download a report of the devices and their configurations, properties, and settings and send it to Hewlett Packard Enterprise Support for further troubleshooting.

Obtain MR Storage Administrator installation files through the Service Pack for ProLiant, or SPP, which you can download from the Hewlett Packard Enterprise website (**https://www.hpe.com/servers/spp/download**). Be sure to use the latest SPP version for the server.

For more information about the MR Storage Administrator, see *HPE MR Storage Administrator User Guide* at **https://www.hpe.com/support/MRSA**.

StorCLI

The Storage Command Line Interface (StorCLI) tool is the command line management software designed for the HPE MegaRAID MR controller. StorCLI is a command line interface that is designed to be easy to use, consistent, and easy to script.

Obtain StorCLI through the Service Pack for ProLiant, or SPP, which you can download from **https://www.hpe.com/servers/spp/download**. Be sure to use the latest SPP version for the server.

For more information about StorCLI, see *StorCLI User Guide* on the **Hewlett Packard Enterprise website**.

Component identification

Front panel components

Server with power module

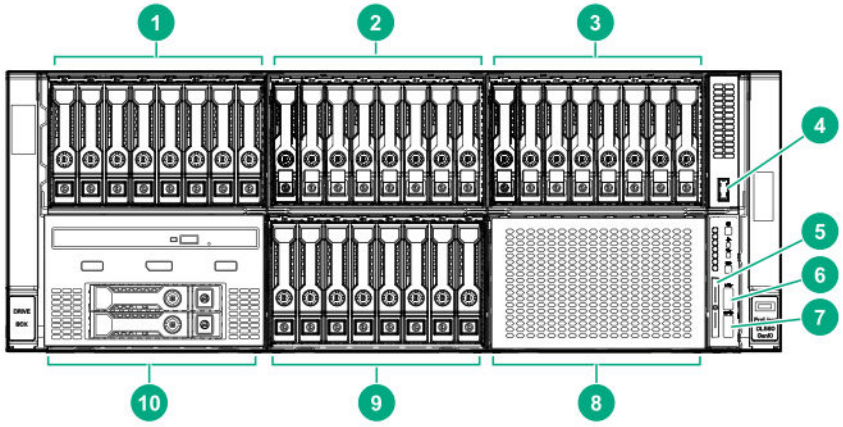

Item	Description
1	Box 1 — Supported options: • **Eight-bay SFF HDD/SSD drive cage** • **Six-bay SFF HDD/Two-bay NVMe SSD (Premium) drive cage** • **Eight-bay SFF NVMe SSD drive cage** (with only four NVMe drives installed)
2	Box 2 — Supported options: • **Eight-bay SFF HDD/SSD drive cage** • **Eight-bay SFF NVMe SSD drive cage** • **Six-bay SFF HDD/Two-bay NVMe SSD (Premium) drive cage**
3	Box 3 — Supported options: • **Eight-bay SFF HDD/SSD drive cage** • **Eight-bay SFF NVMe SSD drive cage** • **Six-bay SFF HDD/Two-bay NVMe SSD (Premium) drive cage**
4	Front USB 3.0 port

Table Continued

Item	Description
5	Serial number and iLO information pull tab
6	iLO Service Port (169.254.1.2)
7	Front USB 3.0 port
8	Box 6 — Supported option: **Eight-bay SFF HDD/SSD drive cage**
9	Box 5 — Supported option: **Eight-bay SFF HDD/SSD drive cage**
10	Box 4 — Supported options: • **Universal media bay components** • **Eight-bay SFF HDD/SSD drive cage**

Server with optional Systems Insight Display Module

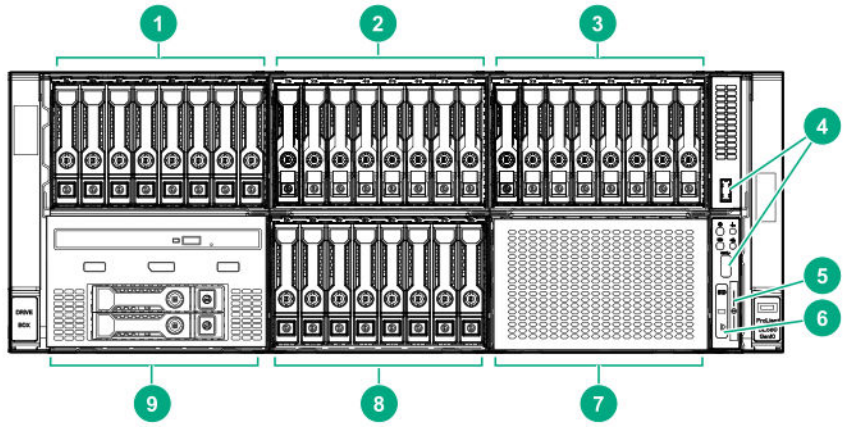

Item	Description
1	Box 1 — Supported options: • **Eight-bay SFF HDD/SSD drive cage** • **Six-bay SFF HDD/Two-bay NVMe SSD (Premium) drive cage** • **Eight-bay SFF NVMe SSD drive cage** (with only four NVMe drives installed)
2	Box 2 — Supported options: • **Eight-bay SFF HDD/SSD drive cage** • **Eight-bay SFF NVMe SSD drive cage** • **Six-bay SFF HDD/Two-bay NVMe SSD (Premium) drive cage**
3	Box 3 — Supported options: • **Eight-bay SFF HDD/SSD drive cage** • **Eight-bay SFF NVMe SSD drive cage** • **Six-bay SFF HDD/Two-bay NVMe SSD (Premium) drive cage**
4	Front USB 3.0 ports (2)
5	Serial number and iLO information pull tab
6	Systems Insight Display Module
7	Box 6 — Supported option: **Eight-bay SFF HDD/SSD drive cage**
8	Box 5 — Supported option: **Eight-bay SFF HDD/SSD drive cage**
9	Box 4 — Supported options: • **Universal media bay components** • **Eight-bay SFF HDD/SSD drive cage**

Universal media bay components

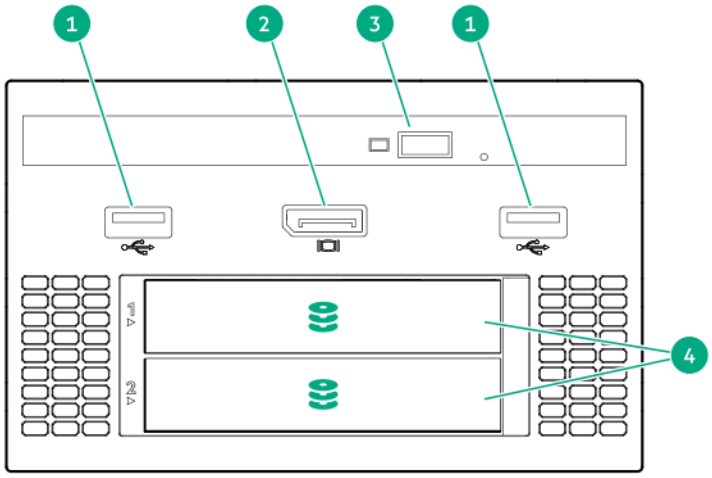

Item	Description
1	USB 2.0 port
2	Video display port
3	Optical disk drive (optional)
4	Drives (optional)[1]

[1] Requires the two-bay SFF (Premium) drive cage

Drive bay numbering

Eight-bay SFF HDD/SSD drive cage

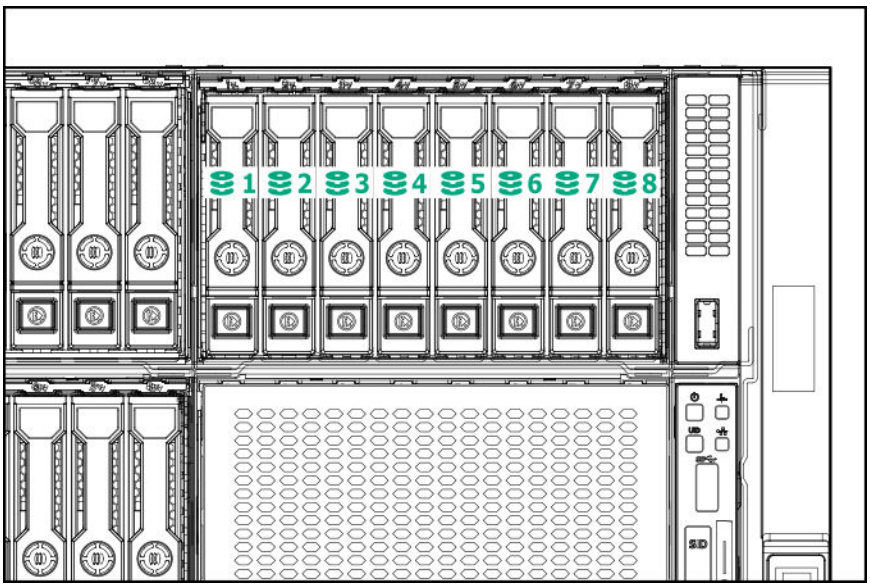

Eight-bay SFF NVMe drive cage

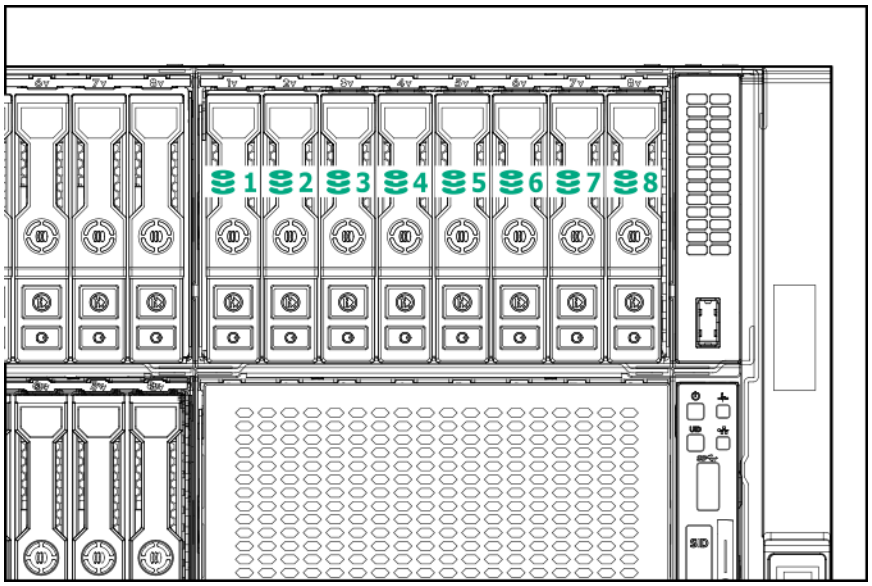

Six-bay SFF HDD/Two-bay NVMe SSD (Premium) drive cage

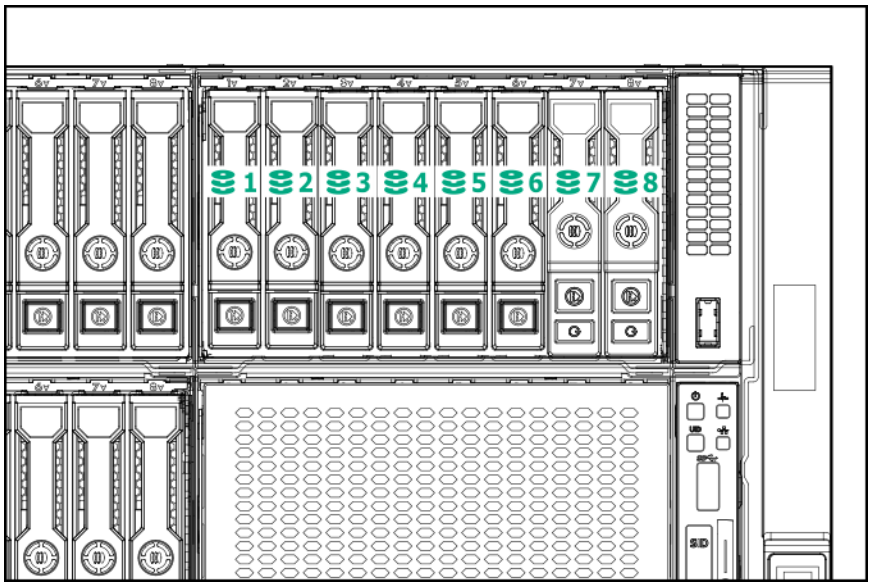

Two-bay SFF (Premium) drive cage

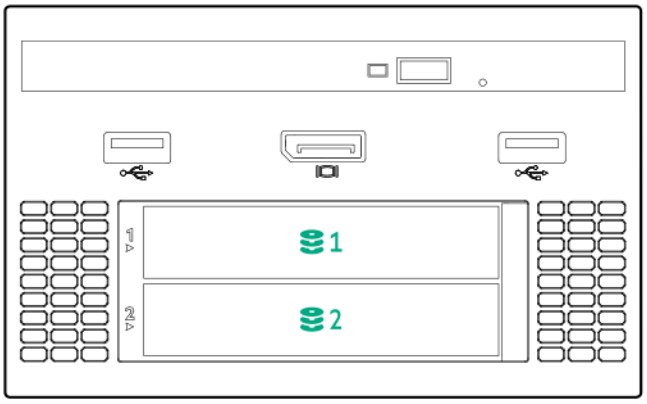

Front panel LEDs and buttons

Power switch module

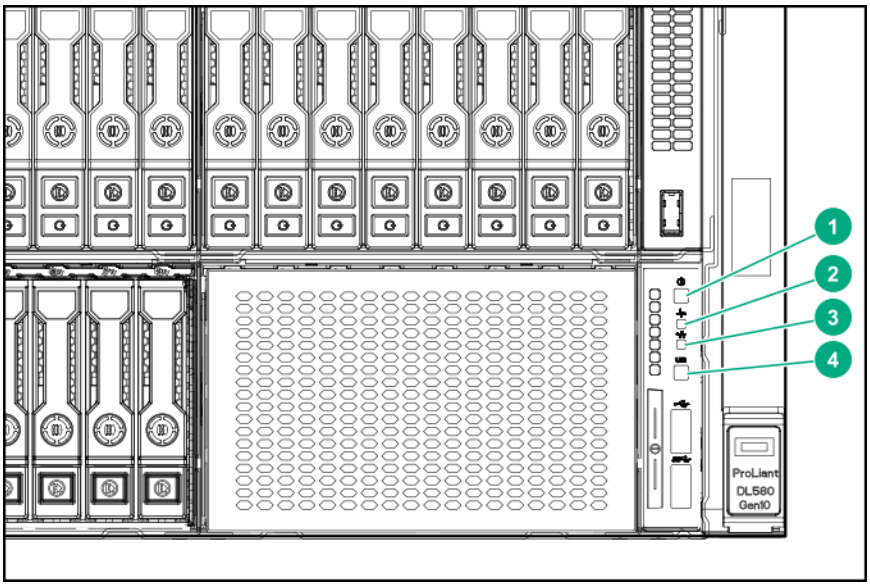

Systems Insight Display module (optional)

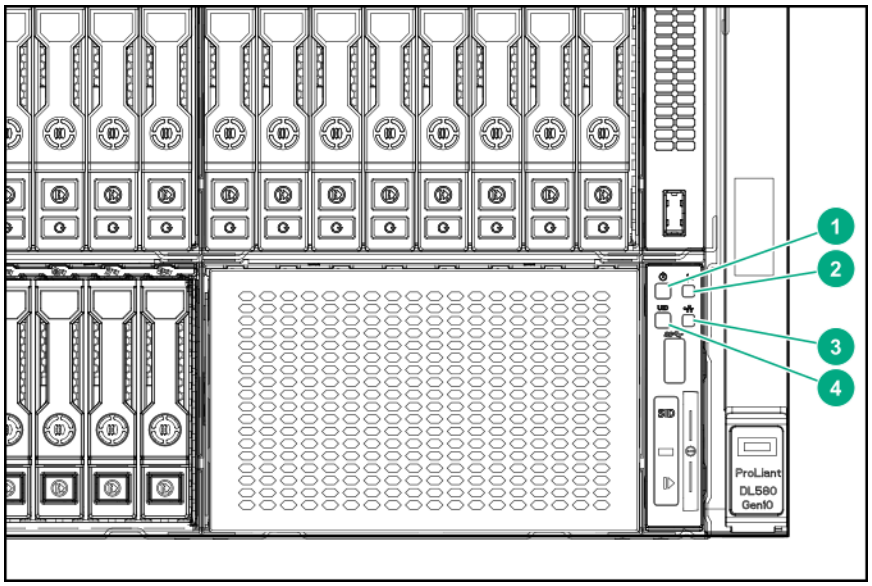

Item	Description	Status
1	Power On/Standby button and system power LED[1]	Solid green = System on Flashing green (1 Hz/cycle per sec) = Performing power on sequence Solid amber = System in standby Off = No power present[2]
2	Health LED[1]	Solid green = Normal Flashing green (1 Hz/cycle per sec) = iLO is rebooting Flashing amber = System degraded Flashing red (1 Hz/cycle per sec) = System critical[3]

Table Continued

Item	Description	Status
3	NIC status LED[1]	Solid green = Link to network Flashing green (1 Hz/cycle per sec) = Network active Off = No network activity
4	UID button/LED[1]	Solid blue = Activated Flashing blue: • 1 Hz/cycle per sec = Remote management or firmware upgrade in progress • 4 Hz/cycle per sec = iLO manual reboot sequence initiated • 8 Hz/cycle per sec = iLO manual reboot sequence in progress • 1 fast flash and then off for 3 seconds = iLO Service Port status is Complete • 4 medium flashes and then off for 1 second = iLO Service Port status is Busy • 8 fast flashes and then off for 1 second = iLO Service Port status is Error Off = Deactivated

[1] When all four LEDs described in this table flash simultaneously, a power fault has occurred.

[2] Facility power is not present, power cord is not attached, no power supplies are installed, power supply failure has occurred, or the power button cable is disconnected.

[3] If the health LED indicates a degraded or critical state, review the system IML or use iLO to review the system health status.

UID button functionality

The UID button can be used to display the Server Health Summary when the server will not power on. For more information, see the latest *HPE iLO 5 User Guide* on the **Hewlett Packard Enterprise website**.

Front panel LED power fault codes

The following table provides a list of power fault codes, and the subsystems that are affected. Not all power faults are used by all servers.

Subsystem	LED behavior
System board	1 flash
Processor	2 flashes
Memory	3 flashes
Riser board PCIe slots	4 flashes
FlexibleLOM	5 flashes
Storage controller	6 flashes

Table Continued

Subsystem	LED behavior
System board PCIe slots	7 flashes
Power backplane	8 flashes
Storage backplane	9 flashes
Power supply	10 flashes
PCIe expansion cards installed in riser board	11 flashes
Chassis	12 flashes
GPU card	13 flashes

Systems Insight Display LEDs

The Systems Insight Display LEDs represent the system board layout. The display enables diagnosis with the access panel installed.

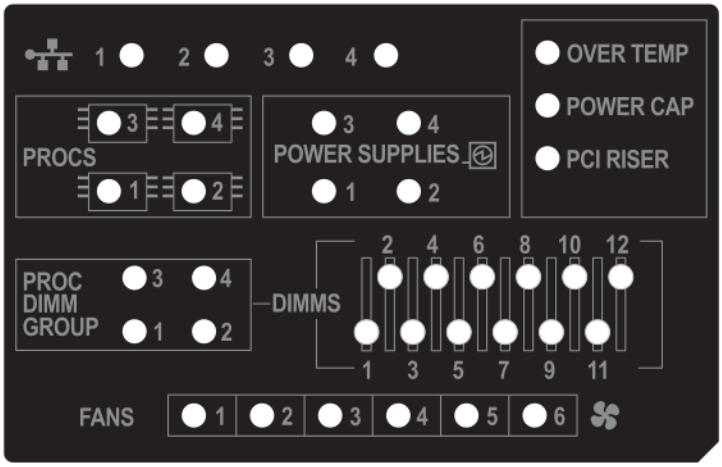

Description	Status
Processor LEDs	Off = Normal Amber = Failed processor
DIMM LEDs	Off = Normal Amber = Failed DIMM or configuration issue
Fan LEDs	Off = Normal Amber = Failed fan or missing fan

Table Continued

Description	Status
NIC LEDs	Off = No link to network Solid green = Network link Flashing green = Network link with activity If power is off, the front panel LED is not active. For status, see **Rear panel LEDs**.
Power supply LEDs	Off = Normal Solid amber = Power subsystem degraded, power supply failure, or input power lost.
PCI riser LED	Off = Normal Amber = Incorrectly installed PCI riser cage
Over temp LED	Off = Normal Amber = High system temperature detected
Proc DIMM Group LED	Off = Normal Amber = Failed DIMM or configuration issue
Power cap LED	Off = System is in standby, or no cap is set. Solid green = Power cap applied

When the health LED on the front panel illuminates either amber or red, the server is experiencing a health event. For more information on the combination of these LEDs, see **Systems Insight Display combined LED descriptions**.

Systems Insight Display combined LED descriptions

The combined illumination of the following LEDs indicates a system condition:

- Systems Insight Display LEDs
- System power LED
- Health LED

Systems Insight Display LED and color	Health LED	System power LED	Status
Processor (amber)	Red	Amber	One or more of the following conditions might exist: • Processor in socket X has failed. • Processor X is not installed in the socket. • Processor X is unsupported. • ROM detects a failed processor during POST.
Processor (amber)	Amber	Green	Processor in socket X is in a pre-failure condition.
DIMM (amber)	Red	Green	One or more DIMMs have failed.
DIMM (amber)	Amber	Green	DIMM in slot X is in a pre-failure condition.
Over temp (amber)	Amber	Green	The Health Driver has detected a cautionary temperature level.
Over temp (amber)	Red	Amber	The server has detected a hardware critical temperature level.
PCI riser (amber)	Red	Green	The PCI riser cage is not seated properly.
Fan (amber)	Amber	Green	One fan has failed or has been removed.
Fan (amber)	Red	Green	Two or more fans have failed or been removed.
Power supply (amber)	Red	Amber	One or more of the following conditions might exist: • Only one power supply is installed and that power supply is in standby. • Power supply fault. • System board fault.
Power supply (amber)	Amber	Green	One or more of the following conditions might exist: • Redundant power supply is installed and only one power supply is functional. • AC power cord is not plugged into redundant power supply. • Redundant power supply fault. • Power supply mismatch at POST or power supply mismatch through hot-plug addition.

Table Continued

Systems Insight Display LED and color	Health LED	System power LED	Status
Power cap (off)	—	Amber	Standby.
Power cap (green)	—	Flashing green	Waiting for power.
Power cap (green)	—	Green	Power is available.
Power cap (flashing amber)	—	Amber	Power is not available.

IMPORTANT: If more than one DIMM slot LED is illuminated, further troubleshooting is required. Test each bank of DIMMs by removing all other DIMMs. Isolate the failed DIMM by replacing each DIMM in a bank with a known working DIMM.

Drives

Hot-plug drive LED definitions

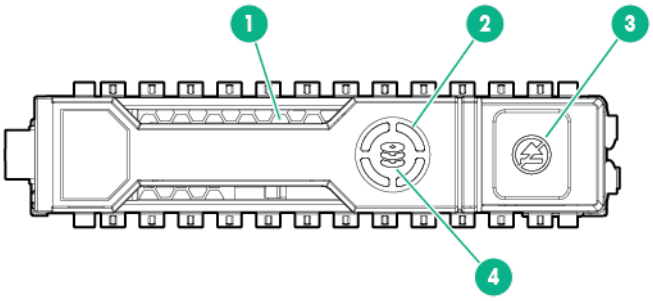

Item	LED	Status	Definition
1	Locate	Solid blue	The drive is being identified by a host application.
		Flashing blue	The drive carrier firmware is being updated or requires an update.
2	Activity ring	Rotating green	Drive activity.
		Off	No drive activity.
3	Do not remove	Solid white	Do not remove the drive. Removing the drive causes one or more of the logical drives to fail.
		Off	Removing the drive does not cause a logical drive to fail.
4	Drive status	Solid green	The drive is a member of one or more logical drives.

Table Continued

Item	LED	Status	Definition
		Flashing green	The drive is doing one of the following: • Rebuilding • Performing a RAID migration • Performing a strip size migration • Performing a capacity expansion • Performing a logical drive extension • Erasing • Spare part activation
		Flashing amber/ green	The drive is a member of one or more logical drives and predicts the drive will fail.
		Flashing amber	The drive is not configured and predicts the drive will fail.
		Solid amber	The drive has failed.
		Off	The drive is not configured by a RAID controller or a spare drive.

Smart Carrier NVMe (SCN) drive LED definitions

The NVMe drive is a PCIe bus device. A device attached to a PCIe bus cannot be removed without allowing the device and bus to complete and cease the signal/traffic flow.

CAUTION: Do not remove an NVMe drive from the drive bay while the Do not remove LED is flashing. The Do not remove LED flashes to indicate that the device is still in use. Removing the NVMe drive before the device has completed and ceased signal/traffic flow can cause loss of data.

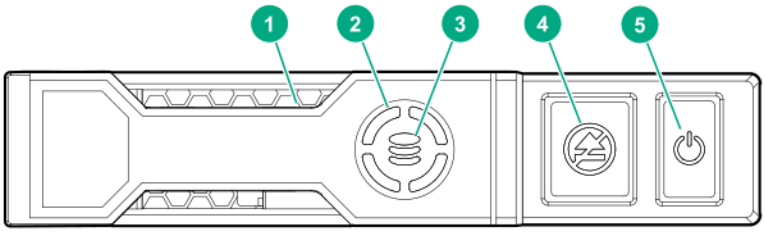

Item	LED	Status	Definition
1	Locate	Solid blue	The drive is being identified by a host application.
		Flashing blue	The drive carrier firmware is being updated or requires an update.
2	Activity ring	Rotating green	Drive activity
		Off	No drive activity

Table Continued

Item	LED	Status	Definition
3	Drive status	Solid green	The drive is a member of one or more logical drives.
		Flashing green	The drive is doing one of the following: • Rebuilding • Performing a RAID migration • Performing a stripe size migration • Performing a capacity expansion • Performing a logical drive extension • Erasing
		Flashing amber/ green	The drive is a member of one or more logical drives and predicts the drive will fail.
		Flashing amber	The drive is not configured and predicts the drive will fail.
		Solid amber	The drive has failed.
		Off	The drive is not configured by a RAID controller.
4	Do not remove	Solid white	Do not remove the drive. The drive must be ejected from the PCIe bus prior to removal.
		Flashing white	The drive ejection request is pending.
		Off	The drive has been ejected.
5	Power	Solid green	Do not remove the drive. The drive must be ejected from the PCIe bus prior to removal.
		Flashing green	The drive ejection request is pending.
		Off	The drive has been ejected.

SAS/SATA drive components and LEDs

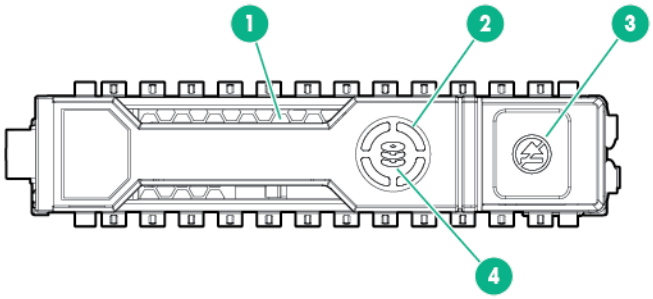

Item	Description	Status
1	Locate	• Solid blue = The drive is being identified by a host application. • Flashing blue = The drive carrier firmware is being updated or requires an update.
2	Activity ring LED	• Rotating green = Drive activity. • Off = No drive activity.
3	Do not remove LED	• Solid white = Do not remove the drive. Removing the drive causes one or more of the logical drives to fail. • Off = Removing the drive does not cause a logical drive to fail.
4	Drive status LED	• Solid green = The drive is a member of one or more logical drives. • Flashing green = The drive is rebuilding or performing a RAID migration, strip size migration, capacity expansion, or logical drive extension, or is erasing. • Flashing amber/green = The drive is a member of one or more logical drives and predicts the drive will fail. • Flashing amber = The drive is not configured and predicts the drive will fail. • Solid amber = The drive has failed. • Off = The drive is not configured by a RAID controller.

Drive guidelines

CAUTION: Do not remove an NVMe SSD from the drive bay while the Do Not Remove button LED is flashing. The Do Not Remove button LED flashes to indicate the device is still in use. Removal of the NVMe SSD before the device has completed and ceased signal/traffic flow can cause loss of data.

Depending on the configuration, this server supports SAS, SATA, and NVMe drives.

Observe the following general guidelines:

- For drive numbering, see **Drive bay numbering**.
- The NVMe SSD is a PCIe bus device. Do not remove a device attached to a PCIe bus without allowing it to first complete and cease the signal/traffic flow.
- The system automatically sets all device numbers.
- If only one hard drive is used, install it in the bay with the lowest device number.
- Drives must be the same capacity to provide the greatest storage space efficiency when drives are grouped into the same drive array.

Rear panel components

Rear panel (standard)

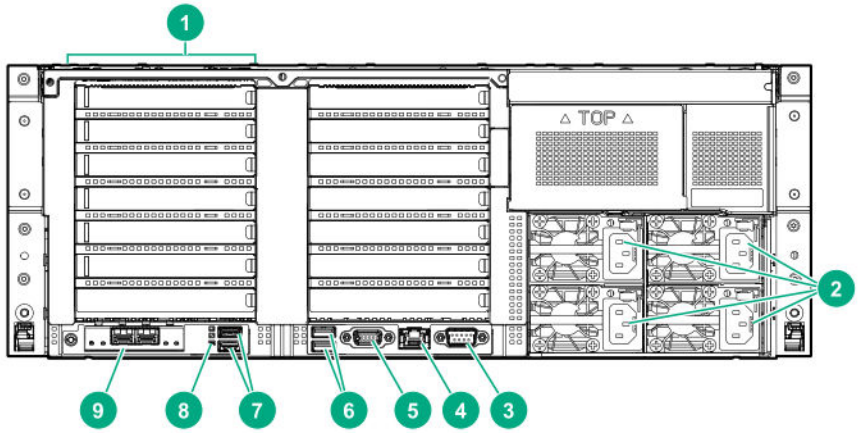

Item	Description
1	Primary PCIe riser slots 1-7
2	Power supplies (4)
3	Serial port
4	iLO Management Port
5	Video port
6	Rear USB 2.0 ports (2)
7	Rear USB 3.0 ports (2)
8	UID LED
9	FlexibleLOM (optional)

Rear panel with optional butterfly riser cage

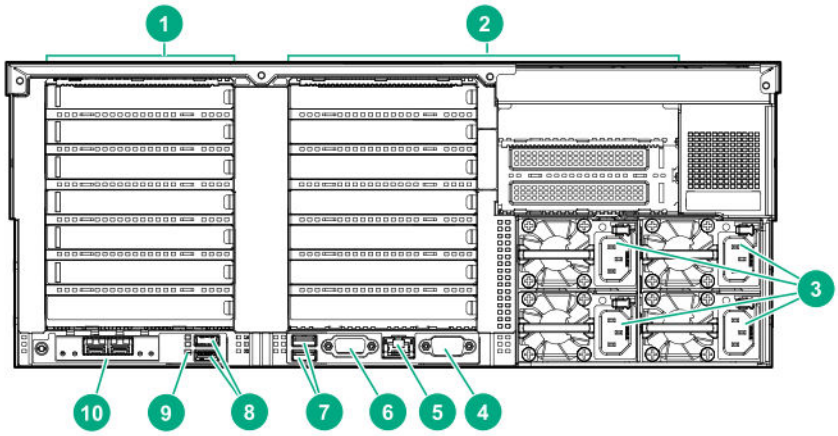

Item	Description
1	Primary PCIe riser slots 1-7
2	Butterfly PCIe riser slots 8-16 (optional)
3	Power supplies (4)
4	Serial port
5	iLO Management Port
6	Video port
7	Rear USB 2.0 ports (2)
8	Rear USB 3.0 ports (2)
9	UID LED
10	FlexibleLOM (optional)

Rear panel LEDs

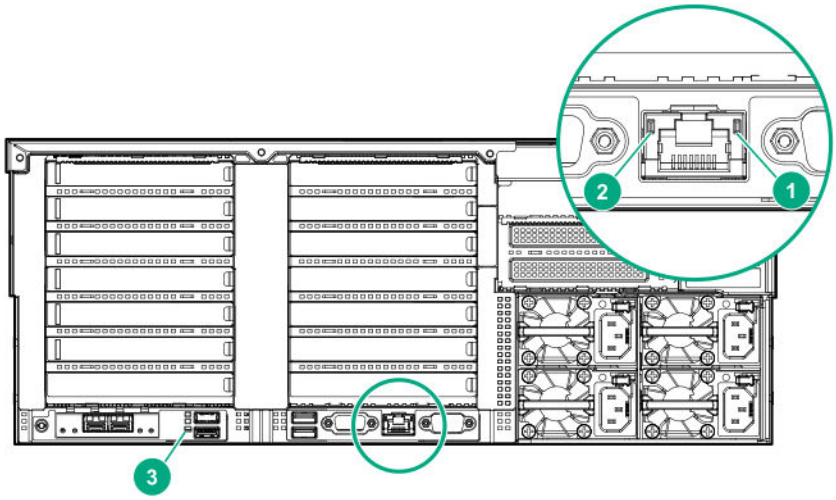

Item	Description	Status
1	Activity LED	Off = No network activity Solid green = Link to network Flashing green = Network activity
2	Link LED	Off = No network link Green = Network link
3	UID LED	Solid blue = Activated Flashing blue: • 1 Hz/cycle per sec = Remote management or firmware upgrade in progress • 4 Hz/cycle per sec = iLO manual reboot sequence initiated • 8 Hz/cycle per sec = iLO manual reboot sequence in progress • 1 fast flash and then off for 3 seconds = iLO Service Port status is Complete • 4 medium flashes and then off for 1 second = iLO Service Port status is Busy • 8 fast flashes and then off for 1 second = iLO Service Port status is Error Off = Deactivated

Power supply LEDs

The power supply LED is located on each power supply.

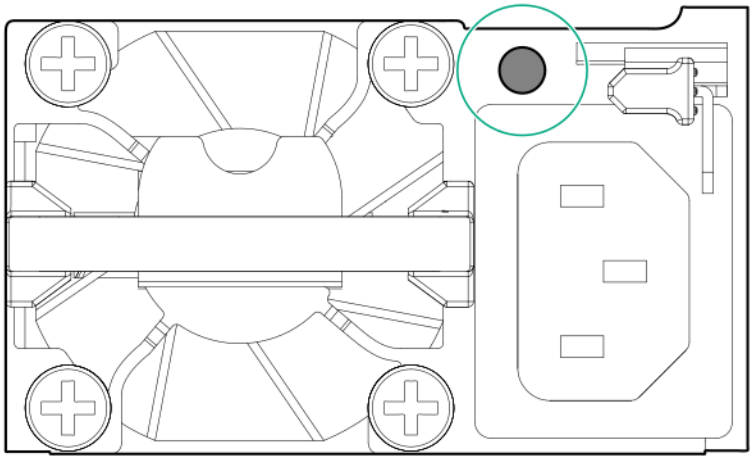

LED Status	Description
Off	System is off or power supply has failed.
Solid Green	Normal

Fan bay numbering

The server requires 12 fans, with two fans per bay.

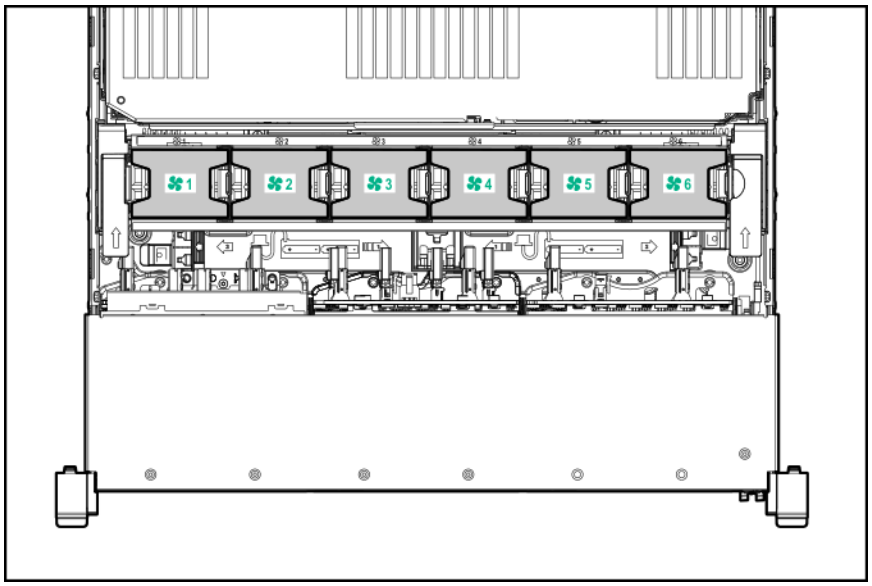

PCIe slot numbering

When both the primary riser cage and the butterfly riser cage are installed, the server supports up to 16 PCIe slots.

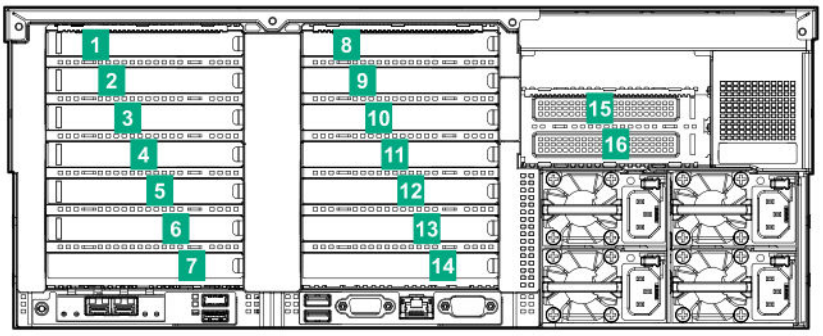

System board components

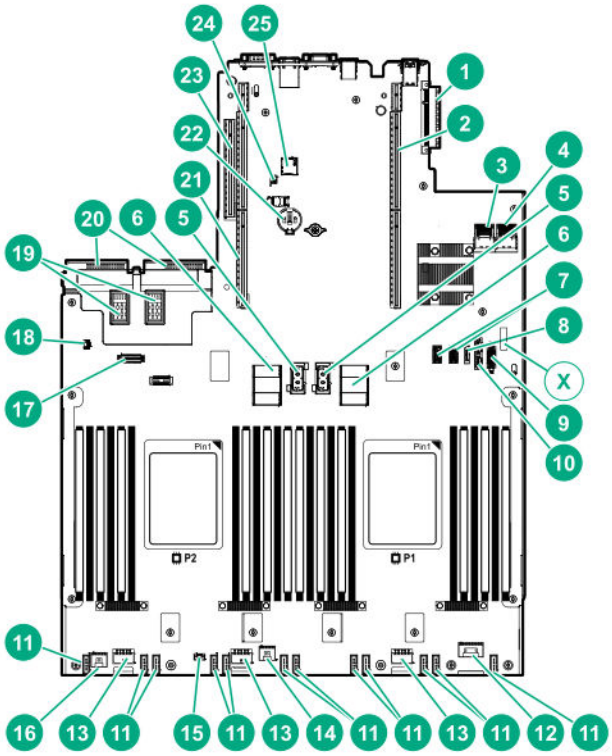

Item	Description
1	FlexibleLOM connector
2	Primary PCIe riser connector (processor 1 required)
3	x4 SATA port 1
4	x4 SATA port 2
5	Upper processor mezzanine connector — Power (2)
6	Upper processor mezzanine connector — Signals (2)

Table Continued

Item	Description
7	USB 3.0 (2)
8	x1 SATA port
X	System maintenance switch
9	Front USB 3.0 connector and iLO Service Port
10	x1 SATA port / Optical Drive port
11	Fan connectors (12)
12	Front power switch connector
13	Drive backplane power connectors (3)
14	Energy pack connector 1 (system board and controllers)[1]
15	Optional 2SFF HDD x1 SATA board sideband connector
16	Energy pack connector 2 (processor mezzanine board)[2]
17	Universal media bay USB/Display port connector
18	Intrusion detection switch connector
19	Power supply connectors (PS3, PS4)
20	Power supply connectors (PS1, PS2)
21	Secondary PCIe riser connector (processor 2 required)
22	System battery
23	Tertiary PCIe riser connector (processor 2 required)
24	TPM connector
25	microSD connector

1 The energy pack connected to this connector provides backup power to the DIMM slots and controllers installed on the system board.

2 The energy pack connected to this connector provides backup power to the DIMM slots on the processor mezzanine tray.

NOTE: This server supports only the HPE Smart Storage Battery.

System maintenance switch descriptions

Position	Default	Function
S1[1]	Off	• Off = iLO security is enabled. • On = iLO security is disabled.
S2	Off	Reserved
S3	Off	Reserved
S4	Off	Reserved

Table Continued

Position	Default	Function
S5[1]	Off	• Off = Power-on password is enabled. • On = Power-on password is disabled.
S6[1,2,3]	Off	• Off = No function • On = Restore default manufacturing settings
S7	Off	Reserved
S8	—	Reserved
S9	—	Reserved
S10	—	Reserved
S11	—	Reserved
S12	—	Reserved

1 To access the redundant ROM, set S1, S5, and S6 to On.

2 When the system maintenance switch position 6 is set to the On position, the system is prepared to restore all configuration settings to their manufacturing defaults.

3 When the system maintenance switch position 6 is set to the On position and Secure Boot is enabled, some configurations cannot be restored. For more information, see **Secure Boot**.

Processor, heatsink, and socket components

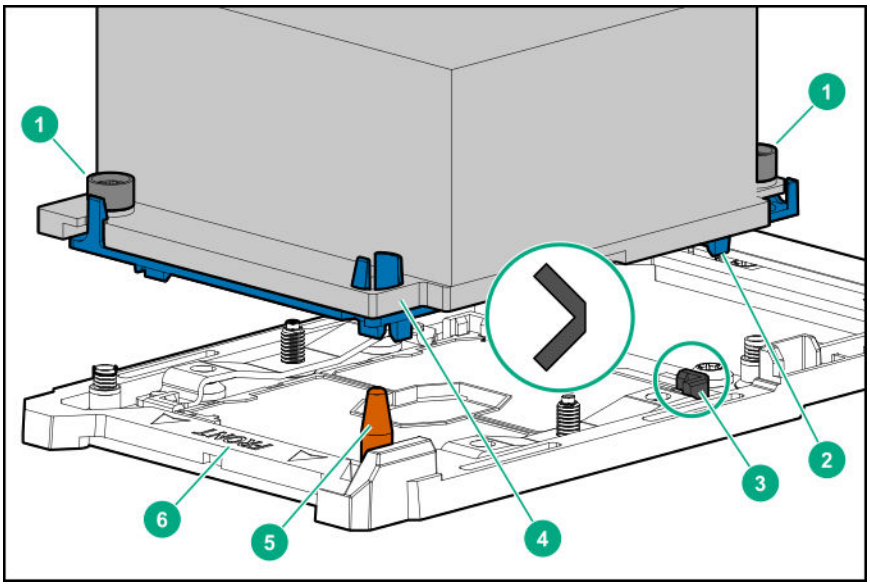

Item	Description
1	Heatsink nuts
2	Processor carrier
3	Pin 1 indicator [1]

Table Continued

Item	Description
4	Heatsink guide/keying feature
5	Alignment post
6	Heatsink keying frame

1 Symbol also on the processor and frame.

DIMM slot locations

DIMM slots are numbered sequentially (1 through 12) for each processor on the system and mezzanine boards.

For specific DIMM population information, see the DIMM population guidelines on the Hewlett Packard Enterprise website (**http://www.hpe.com/docs/memory-population-rules**).

System board DIMM slots

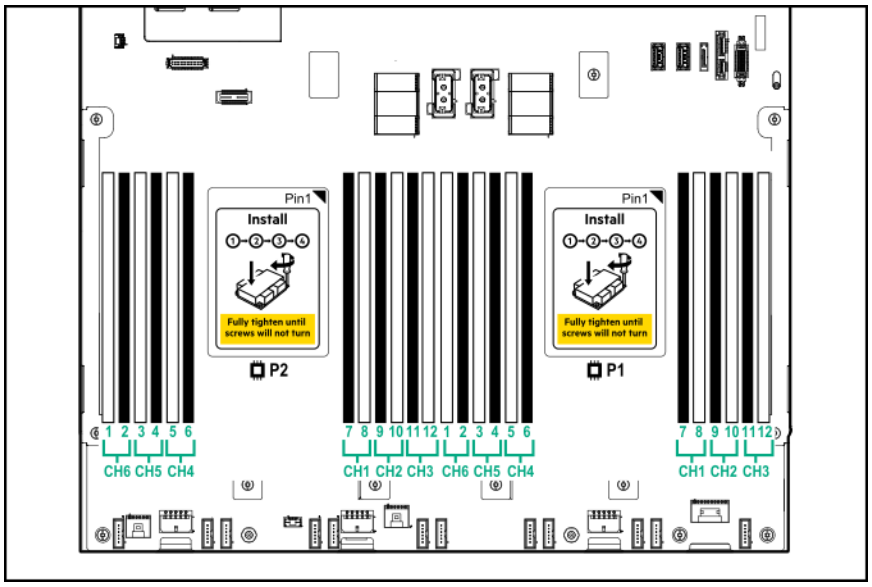

Processor mezzanine board DIMM slots

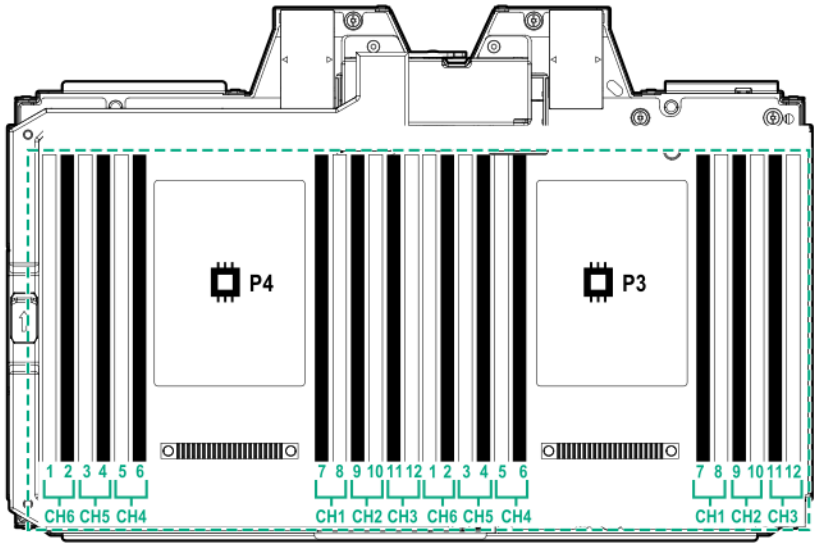

DIMM label identification

To determine DIMM characteristics, see the label attached to the DIMM. The information in this section helps you to use the label to locate specific information about the DIMM.

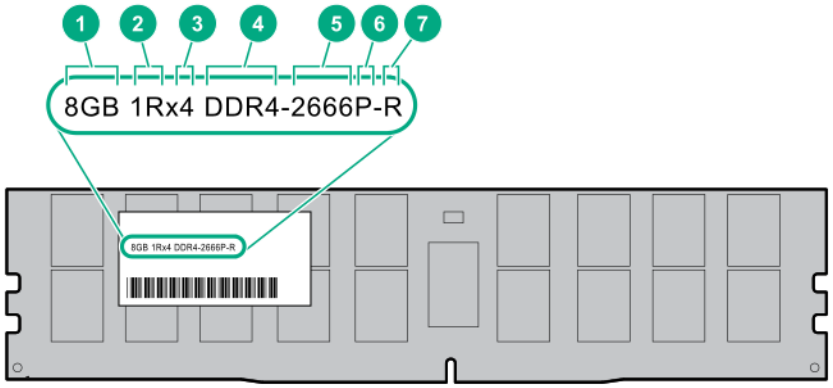

Item	Description	Example
1	Capacity	8 GB 16 GB 32 GB 64 GB 128 GB
2	Rank	1R = Single rank 2R = Dual rank 4R = Quad rank 8R = Octal rank
3	Data width on DRAM	x4 = 4-bit x8 = 8-bit x16 = 16-bit
4	Memory generation	PC4 = DDR4
5	Maximum memory speed	2133 MT/s 2400 MT/s 2666 MT/s 2933 MT/s

Table Continued

Item	Description	Example
6	CAS latency	P = CAS 15-15-15 T = CAS 17-17-17 U = CAS 20-18-18 V = CAS 19-19-19 (for RDIMM, LRDIMM) V = CAS 22-19-19 (for 3DS TSV LRDIMM) Y = CAS 21-21-21 (for RDIMM, LRDIMM) Y = CAS 24-21-21 (for 3DS TSV LRDIMM)
7	DIMM type	R = RDIMM (registered) L = LRDIMM (load reduced) E = Unbuffered ECC (UDIMM)

For more information about product features, specifications, options, configurations, and compatibility, see the HPE DDR4 SmartMemory QuickSpecs on the Hewlett Packard Enterprise website (**https://www.hpe.com/support/DDR4SmartMemoryQS**).

Intel Optane persistent memory 100 series for HPE label identification

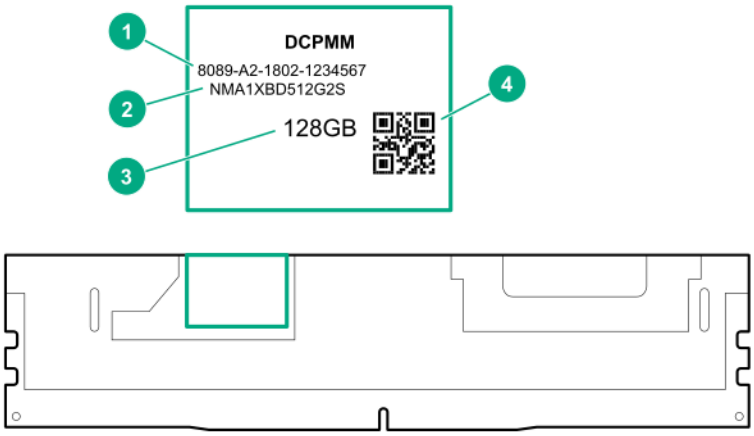

Item	Description	Example
1	Unique ID number	8089-A2-1802-1234567
2	Model number	NMA1XBD512G2S
3	Capacity	128 GB 256 GB 512 GB
4	QR code	Includes part number and serial number

For more information about product features, specifications, options, configurations, and compatibility, see the product QuickSpecs on the Hewlett Packard Enterprise website (**https://www.hpe.com/support/persistentmemoryQS**).

Drive cage backplane identification

Eight-bay SFF HDD/SSD drive cage backplane

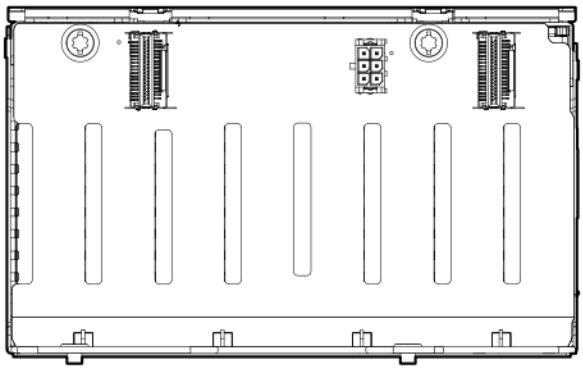

Eight-bay SFF NVMe SSD drive cage backplane

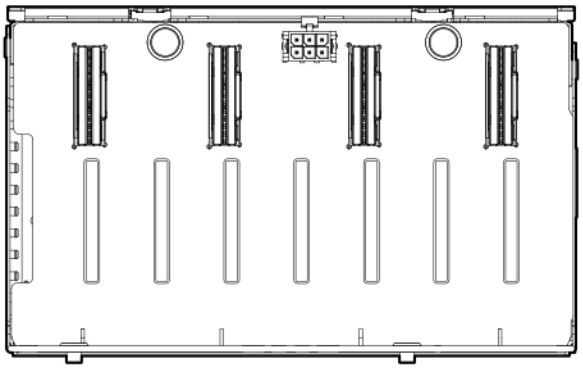

Two-bay NVMe/Six-bay SFF HDD (Premium) drive cage backplane

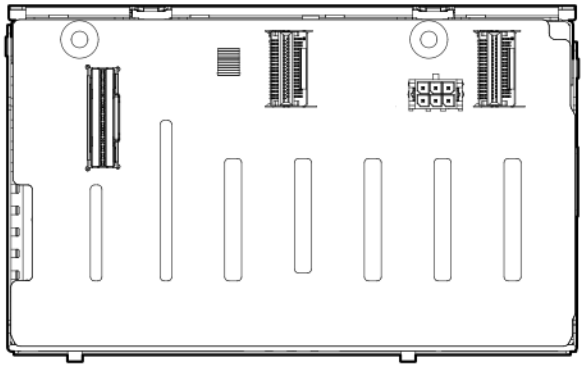

Two-bay SFF (Premium) drive cage backplane

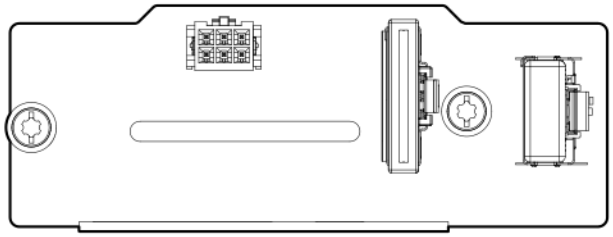

Riser board components

4 port Slimline riser

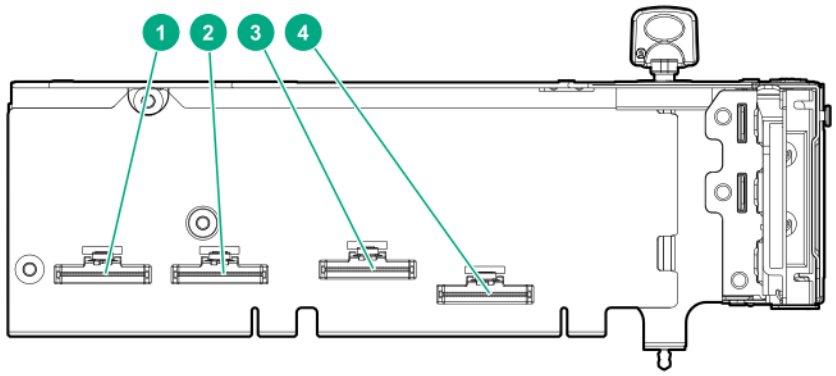

Item	Description
1–4	x8 Slimline NVMe connectors

6 slot riser board

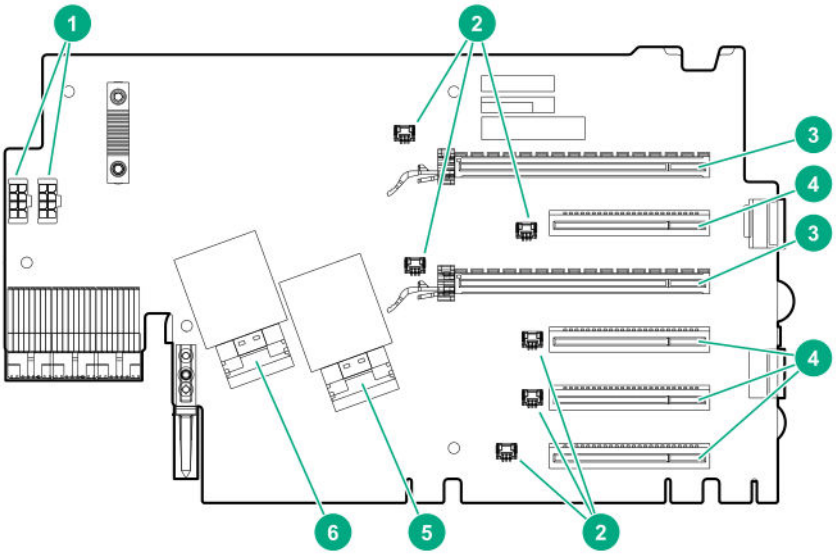

Item	Description
1	GPU power connectors (2)
2	Controller backup power connectors (6)
3	x16 connectors (2)

Table Continued

Item	Description
4	x8 connectors (4)
5	NVMe slimline connector J4
6	NVMe slimline connector J3

7 slot riser board

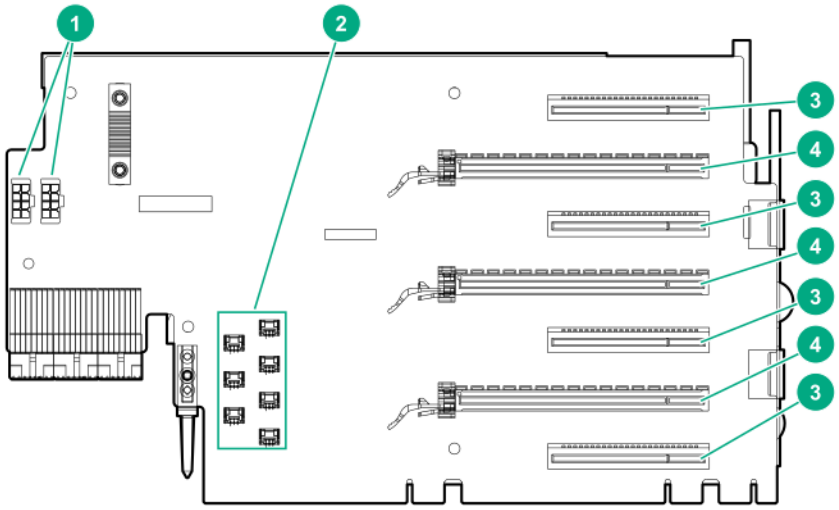

Item	Description
1	GPU power connectors (2)
2	Controller backup power connectors (7)
3	x8 connectors (4)
4	x16 connectors (3)

Tertiary riser board

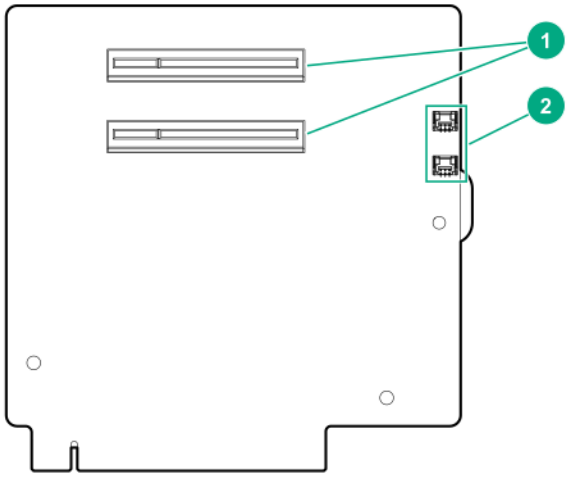

Item	Description
1	x8 connectors (2)
2	Controller backup power connectors

Storage controller components

For component and LED identification, see the user guide for your storage controller series on the Hewlett Packard Enterprise website (**https://www.hpe.com/info/smartstorage-docs**).

For a complete list of supported storage controller models, see the server QuickSpecs on the Hewlett Packard Enterprise website (**https://www.hpe.com/info/qs**).

HPE NS204i-p NVMe OS Boot Device components

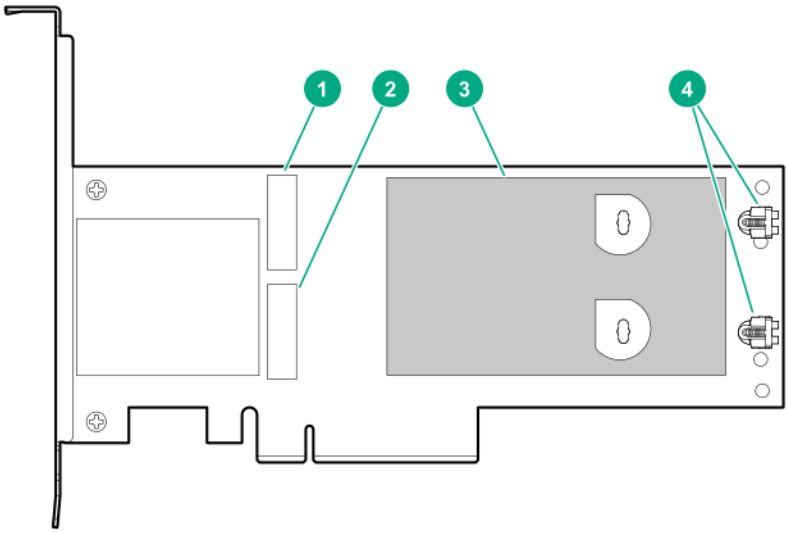

Item	Description
1	Drive bay 1
2	Drive bay 2
3	Thermal interface pad with removable liner
4	M.2 drive retaining latches

HPE NS204i-p NVMe OS Boot Device LED definitions

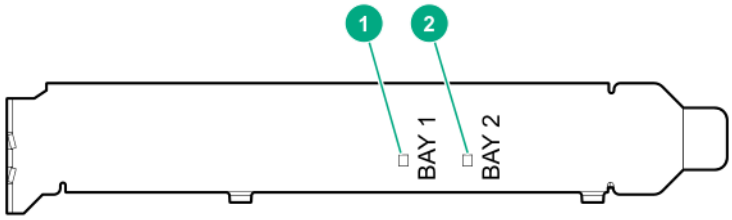

Item	Description	Fault LED status
1	Bay 1 LED	Off: Normal
2	Bay 2 LED	Flashing 1Hz: Drive predictive failure Amber: Drive failure

HPE 12G SAS Expander Card port numbering



HPE Smart Array P824i-p MR Gen10 Controller

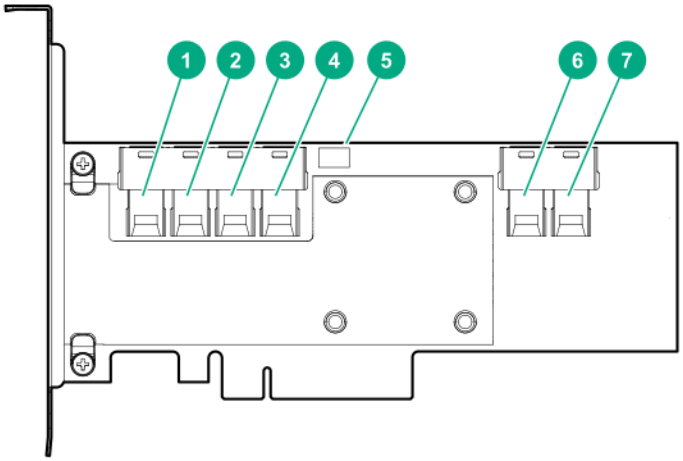

Components

Item	Description
1	Internal SAS port 1i
2	Internal SAS port 2i
3	Internal SAS port 3i
4	Internal SAS port 4i
5	Controller backup power cable connector
6	Internal SAS port 5i
7	Internal SAS port 6i

HPE InfiniBand HDR/Ethernet 940QSFP 56x16 adapter LEDs

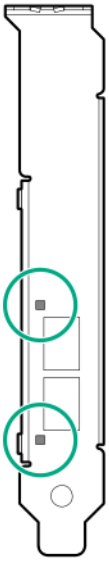

Link LED status[1]	Description
Off	A link has not been established.
Solid amber	Active physical link exists
Blinking amber	4 Hz blinking amber indicates a problem with the physical link.
Solid green	A valid logical (data activity) link exists with no active traffic.
Blinking green	A valid logical link exists with active traffic.

1 2-port adapter LEDs are shown. The 1-port adapters have only a single LED.

DSC-25 2-port SFP28 card ports and LEDs

Ports

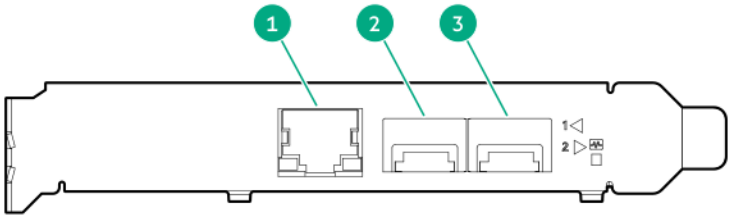

Table 1: Ports

Item	Port	Description
1	Management port	1GbE RJ45
2	Network interface port	10/25G SFP+ based
3	Network interface port	10/25G SFP+ based

LEDs

The HPE for Pensando DSP DSC-25 2p SFP28 card is a dual-port, single-slot, half-height, half-length (HHHL) SFP28 network adapter. It has LEDs for Link (L) and Activity (A) for each port. A half-height bracket is shown in the following illustration with SFP28 ports and LEDs.

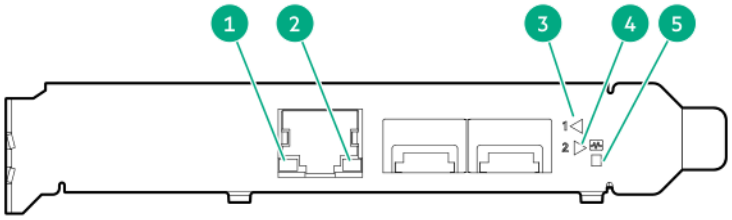

Table 2: LED indicators

Item	LED	Status	Description
1	Management Port Activity LED	Off	No activity
		Flashing	Passing traffic; flashing frequency indicates traffic intensity
2	Management Port Link LED	Off	A link has not been established
		Solid green	Valid Ethernet link

Table Continued

Item	LED	Status	Description
3	SFP Port 1 Link/Activity LED	Off	A link has not been established
		Solid green	Valid Ethernet link
		Flashing green	Passing traffic; flashing frequency indicates traffic intensity
		Solid amber	Link fault
4	SFP Port 2 Link/Activity LED	Off	A link has not been established
		Solid green	Valid Ethernet link
		Flashing green	Passing traffic; flashing frequency indicates traffic intensity
		Solid amber	Link fault
5	System status LED	Off	System is not powered
		Solid amber	Power is up, software has not booted yet
		Solid green	System is up and fully operational

Cabling

Storage Cabling Guidelines

When installing cables, observe the following:

- All ports are labeled:
  - System board ports
  - Controller ports
  - 12G SAS Expander ports
- Most data cables have labels near each connector with destination port information.
- Some data cables are pre-bent. Do not unbend or manipulate the cables.
- Before connecting a cable to a port, lay the cable in place to verify the length of the cable.
- When routing cables from the front to the rear of the server, use the cable channels on either side of the chassis.
- A maximum of four cables can be routed to the riser cages.

Cable matrix

Use the following tables to find cabling information and part numbers.

SAS/SATA kits

Option kit	Cable part number*	From	To	Power cable part number
2SFF SAS/SATA drive cage	869952-001[1]	Drive backplane	System board	870479-001[2]
8SFF SAS/SATA drive cage	870480-001[3]	Drive backplane (drive boxes 1, 3, 4, and 6)	Primary riser cage Tertiary riser cage	870479-001[2]
8SFF SAS/SATA drive cage	870483-001[3]	Drive backplane (drive boxes 1–6)	Primary riser cage Tertiary riser cage	870479-001[2]
8SFF SAS/SATA drive cage (mini SAS)	870492-001[4]	Drive backplane (drive boxes 1, 3, 4, and 6)	Primary riser cage Tertiary riser cage	870479-001[2]

Table Continued

Option kit	Cable part number*	From	To	Power cable part number
8SFF SAS/SATA drive cage (mini SAS)	870489-001[4]	Drive backplane (drive boxes 1–6)	Primary riser cage Tertiary riser cage	870479-001[2]
12G SAS Expander	870499-001[5]	2SFF SAS port	12G SAS Expander	—
HPE Smart Array p824i-p MR Gen 10 controller	—	Controller	Riser	830824-B21[6]
	P00511-001[7]	Drive backplane (drive box 4)	Primary riser cage, controller ports 5 and 6	—
	P00509-001[7]	Drive backplane (drive box 5)	Primary riser cage, controller ports 3 and 4	—
	P00510-001[7]	Drive backplane (drive box 6)	Primary riser cage, controller ports 1 and 2	—
	P00510-001[7]	Drive backplane (drive box 1)	Tertiary riser cage, controller ports 1 and 2	—
	P00509-001[7]	Drive backplane (drive box 2)	Tertiary riser cage, controller ports 3 and 4	—
	P00511-001[7]	Drive backplane (drive box 3)	Tertiary riser cage, controller ports 5 and 6	—

* To order spare cables, use the following kits and spare part numbers.

[1] 2SFF cable kit (877963-001)

[2] USB 3.0 Ext. 600mm+SASPWR BP cable kit (881699-001)

[3] M.SAS/SATA 1041mm+900mm cable kit (881700-001)

[4] M.SAS 970mm+820mm cable kit (881701-001)

[5] M.SAS/SATA 1x4-1x4 cable kit (881702-001)

[6] 28 AWG, 3 Pin, PCI to Controller power cable, short (878645-001)

[7] MiniSAS to MiniSAS HD,12G cable kit (P03215-001)

Data kits

Option kit	Cable part number*	From	To
Front USB/display port (universal media bay)	Included with component	Component	System board
Front USB 3.0 port	870476-001[1]	Component	System board

Table Continued

Option kit	Cable part number*	From	To
Optical disk drive	869949-001[2]	Component	System board
Systems Insight Display	Included with component	Component	System board

* To order spare cables, use the following kits and spare part numbers.

[1] USB 3.0 Ext. 600mm+SASPWR BP cable kit (881699-001)

[2] Optical drive cable (784623-001)

GPU kits

Option kit	Cable part number*	From	To
HPE GPU 8p Keyed GPU Cable Kit	869820-001[1]	GPU	Riser
HPE GPU 8p Cable Kit	869821-001[1]	GPU	Riser

* To order spare cables, use the following kits and spare part numbers.

[1] GPU cables kit (875097-001)

NVMe drive cable matrix

Use the following tables to find supported NVMe drive configurations, cabling information, and part numbers.

NVMe drives are supported in servers with the following riser configurations:

- **6 slot primary**
- **6 slot primary + 8 slot butterfly** *
- **6 slot primary + 9 slot butterfly** **
- **7 slot primary + 8 slot butterfly**
- **4 port slimline primary + 8 slot butterfly + 4 port mezzanine card**
- **4 port slimline primary + 9 slot butterfly + 4 port mezzanine card**

* The 8 slot butterfly riser contains a 6 slot riser in the secondary PCIe slot, and a 2 slot riser in the tertiary PCIe slot.

** The 9 slot butterfly riser contains a 7 slot riser in the secondary PCIe slot, and a 2 slot riser in the tertiary PCIe slot.

Server riser configuration: 6 slot riser installed in the primary riser cage

# of NVMe drives supported	Processor quantity	Cable part number *	From	To	Power cable part number *
2	1	869957-001[1]	Drive box 2, 8SFF (6+2) Premium drive cage	Primary 6 slot riser	870479-001[3]
2	1	869957-001[1]	Drive box 4, 2SFF Premium drive cage	Primary 6 slot riser	870479-001[3]

Table Continued

# of NVMe drives supported	Processor quantity	Cable part number *	From	To	Power cable part number *
2	2	869957-001[1]	Drive box 2, 8SFF (6+2) Premium drive cage	Primary 6 slot riser	870479-001[3]
2	2	869957-001[1]	Drive box 4, 2SFF Premium drive cage	Primary 6 slot riser	870479-001[3]
2	3	869957-001[1]	Drive box 4, 2SFF Premium drive cage	Primary 6 slot riser	870479-001[3]
4	3	869957-001[1]	Drive box 2, 8SFF (6+2) Premium drive cage	Primary 6 slot riser	870479-001[3]
			Drive box 3, 8SFF (6+2) Premium drive cage	Primary 6 slot riser	
4	3	869957-001[1]	Drive box 2, 8SFF (6+2) Premium drive cage	Primary 6 slot riser	870479-001[3]
			Drive box 4, 2SFF Premium drive cage	Primary 6 slot riser	
4 **	3	870508-001[2]	Drive box 2, 8-NVMe drive cage	Primary 6 slot riser	870479-001[3]
2	4	869957-001[1]	Drive box 4, 2SFF Premium drive cage	Primary 6 slot riser	870479-001[3]
4	4	869957-001[1]	Drive box 2, 8SFF (6+2) Premium drive cage	Primary 6 slot riser	870479-001[3]
			Drive box 3, 8SFF (6+2) Premium drive cage	Primary 6 slot riser	
4	4	869957-001[1]	Drive box 2, 8SFF (6+2) Premium drive cage	Primary 6 slot riser	870479-001[3]
			Drive box 4, 2SFF Premium drive cage	Primary 6 slot riser	

* To order spare cables, use the following kits and spare part numbers.

- [1] NVMe cable kit (877983-001)
- [2] NVMe cable kit (881703-001)
- [3] USB 3.0 Ext. 600mm+SASPWR BP cable kit (881699-001)

** Partial configuration, see **(6-drive or fewer) configuration**.

Server riser configuration:

- **Primary riser cage—6 slot riser installed**
- **Butterfly riser cage—6 slot and 2 slot risers installed**

# of NVMe drives supported	Processor quantity	Cable part number	From	To	Power cable part number
4	2	869957-001[1]	Drive box 2, 8SFF (6+2) Premium drive cage	Primary 6 slot riser	870479-001[3]
			Drive box 4, 2SFF Premium drive cage	Butterfly 6 slot riser	
4	2	869957-001[1]	Drive box 2, 8SFF (6+2) Premium drive cage	Butterfly 6 slot riser	870479-001[3]
			Drive box 3, 8SFF (6+2) Premium drive cage	Primary 6 slot riser	
6	3	869957-001[1]	Drive box 2, 8SFF (6+2) Premium drive cage	Primary 6 slot riser	870479-001[3]
			Drive box 3, 8SFF (6+2) Premium drive cage	Primary 6 slot riser	
			Drive box 4, 2SFF Premium drive cage	Butterfly 6 slot riser	
6	3	869957-001[1]	Drive box 1, 8SFF (6+2) Premium drive cage	Butterfly 6 slot riser	870479-001[3]
			Drive box 2, 8SFF (6+2) Premium drive cage	Primary 6 slot riser	
			Drive box 3, 8SFF (6+2) Premium drive cage	Primary 6 slot riser	
6 **	3	870508-001[2]	Drive box 2, 8-NVMe drive cage	Primary 6 slot riser Butterfly 6 slot riser	870479-001[3]
6	4	869957-001[1]	Drive box 1, 8SFF (6+2) Premium drive cage	Butterfly 6 slot riser	870479-001[3]
			Drive box 2, 8SFF (6+2) Premium drive cage	Primary 6 slot riser	

Table Continued

# of NVMe drives supported	Processor quantity	Cable part number	From	To	Power cable part number
			Drive box 3, 8SFF (6+2) Premium drive cage	Primary 6 slot riser	
8	4	870508-001[2]	Drive box 2, 8-NVMe drive cage	Primary 6 slot riser Butterfly 6 slot riser	870479-001[3]
8	4	869957-001[1]	Drive box 1, 8SFF (6+2) Premium drive cage	Primary 6 slot riser	870479-001[3]
			Drive box 2, 8SFF (6+2) Premium drive cage	Butterfly 6 slot riser	
			Drive box 3, 8SFF (6+2) Premium drive cage	Primary 6 slot riser	
			Drive box 4, 2SFF Premium drive cage	Butterfly 6 slot riser	

* To order spare cables, use the following kits and spare part numbers.

- [1] NVMe cable kit (877983-001)
- [2] NVMe cable kit (881703-001)
- [3] USB 3.0 Ext. 600mm+SASPWR BP cable kit (881699-001)

** Partial configuration, see **(6-drive or fewer) configuration**.

Server riser configuration:

- **Primary riser cage—6 slot riser installed**
- **Butterfly riser cage—7 slot and 2 slot risers installed**

# of NVMe drives supported	Processor quantity	Cable part number	From	To	Power cable part number
2	2	869957-001[1]	Drive box 2, 8SFF (6+2) Premium drive cage	Primary 6 slot riser	870479-001[3]
2	2	869957-001[1]	Drive box 4, 2SFF Premium drive cage	Primary 6 slot riser	870479-001[3]
4	3	869957-001[1]	Drive box 2, 8SFF (6+2) Premium drive cage	Primary 6 slot riser	870479-001[3]

Table Continued

# of NVMe drives supported	Processor quantity	Cable part number	From	To	Power cable part number
			Drive box 3, 8SFF (6+2) Premium drive cage	Primary 6 slot riser	
4	3	869957-001[1]	Drive box 2, 8SFF (6+2) Premium drive cage	Primary 6 slot riser	870479-001[3]
			Drive box 4, 2SFF Premium drive cage	Primary 6 slot riser	
4	4	869957-001[1]	Drive box 2, 8SFF (6+2) Premium drive cage	Primary 6 slot riser	870479-001[3]
			Drive box 3, 8SFF (6+2) Premium drive cage	Primary 6 slot riser	
4	4	869957-001[1]	Drive box 2, 8SFF (6+2) Premium drive cage	Primary 6 slot riser	870479-001[3]
			Drive box 4, 2SFF Premium drive cage	Primary 6 slot riser	

* To order spare cables, use the following kits and spare part numbers.

- [1] NVMe cable kit (877983-001)
- [2] NVMe cable kit (881703-001)
- [3] USB 3.0 Ext. 600mm+SASPWR BP cable kit (881699-001)

Server riser configuration:

- **Primary riser cage—7 slot riser installed**
- **Butterfly riser cage—6 slot and 2 slot risers installed**

# of NVMe drives supported	Processor quantity	Cable part number	From	To	Power cable part number
2	2	869957-001[1]	Drive box 2, 8SFF (6+2) Premium drive cage	Butterfly 6 slot riser	870479-001[3]
2	2	869957-001[1]	Drive box 4, 2SFF Premium drive cage	Butterfly 6 slot riser	870479-001[3]
2	3	869957-001[1]	Drive box 2, 8SFF (6+2) Premium drive cage	Butterfly 6 slot riser	870479-001[3]

Table Continued

# of NVMe drives supported	Processor quantity	Cable part number	From	To	Power cable part number
2	3	869957-001[1]	Drive box 4, 2SFF Premium drive cage	Butterfly 6 slot riser	870479-001[3]
2	4	869957-001[1]	Drive box 2, 8SFF (6+2) Premium drive cage	Butterfly 6 slot riser	870479-001[3]
2	4	869957-001[1]	Drive box 4, 2SFF Premium drive cage	Butterfly 6 slot riser	870479-001[3]
4	4	869957-001[1]	Drive box 2, 8SFF (6+2) Premium drive cage	Butterfly 6 slot riser	870479-001[3]
			Drive box 4, 2SFF Premium drive cage	Butterfly 6 slot riser	
4	4	869957-001[1]	Drive box 1, 8SFF (6+2) Premium drive cage	Butterfly 6 slot riser	870479-001[3]
			Drive box 2, 8SFF (6+2) Premium drive cage	Butterfly 6 slot riser	

* To order spare cables, use the following kits and spare part numbers.

- [1] NVMe cable kit (877983-001)
- [2] NVMe cable kit (881703-001)
- [3] USB 3.0 Ext. 600mm+SASPWR BP cable kit (881699-001)

Server riser configuration:

- **Primary riser cage—4 port slimline riser installed**
- **Butterfly riser cage—6 slot and 2 slot risers installed**
- **4 port NVMe mezzanine card installed**

# of NVMe drives supported	Processor quantity	Cable part number	From	To	Power cable part number
16	3	870508-001[2]	Drive box 2, 8-NVMe drive cage	4 port mezzanine card	870479-001[3]
			Drive box 3, 8-NVMe drive cage	Primary 4 port riser	

Table Continued

# of NVMe drives supported	Processor quantity	Cable part number	From	To	Power cable part number
18	3	870508-001[2]	Drive box 2, 8-NVMe drive cage	4 port mezzanine card	870479-001[3]
			Drive box 3, 8-NVMe drive cage	Primary 4 port riser	
		869957-001[1]	Drive box 4, 2SFF Premium drive cage	Butterfly 6 slot riser	
18	4	870508-001[2]	Drive box 1, 8-NVMe drive cage	4 port mezzanine card	870479-001[3]
			Drive box 2, 8-NVMe drive cage	4 port mezzanine card	
			Drive box 3, 8-NVMe drive cage	Primary 4 port riser	
		869957-001[1]	Drive box 4, 2SFF Premium drive cage	Butterfly 6 slot riser	
18	3	870508-001[2]	Drive box 1, 8SFF (6+2) Premium drive cage	Butterfly 6 slot riser	870479-001[3]
			Drive box 2, 8-NVMe drive cage	4 port mezzanine card	
		869957-001[1]	Drive box 3, 8-NVMe drive cage	Primary 4 port riser	
18	4	870508-001[2]	Drive box 2, 8-NVMe drive cage	4 port mezzanine card	870479-001[3]
			Drive box 3, 8-NVMe drive cage	Primary 4 port riser	
		869957-001[1]	Drive box 4, 2SFF Premium drive cage	Butterfly 6 slot riser	
18	4	870508-001[2]	Drive box 1, 8SFF (6+2) Premium drive cage	Butterfly 6 slot riser	870479-001[3]
			Drive box 2, 8-NVMe drive cage	4 port mezzanine card	

Table Continued

# of NVMe drives supported	Processor quantity	Cable part number	From	To	Power cable part number
		869957-001[1]	Drive box 3, 8-NVMe drive cage	Primary 4 port riser	
20 **	4	870508-001[2]	Drive box 1, 8SFF (6+2) Premium drive cage	Butterfly 6 slot riser	870479-001[3]
			Drive box 2, 8-NVMe drive cage	4 port mezzanine card	
		869957-001[1]	Drive box 3, 8-NVMe drive cage	Primary 4 port riser	
			Drive box 4, 2SFF Premium drive cage	Butterfly 6 slot riser	

* To order spare cables, use the following kits and spare part numbers.

- [1] NVMe cable kit (877983-001)
- [2] NVMe cable kit (881703-001)
- [3] USB 3.0 Ext. 600mm+SASPWR BP cable kit (881699-001)

** Partial configuration, see **20-drive configuration**.

Server riser configuration:

- **Primary riser cage—4 port slimline riser installed**
- **Butterfly riser cage—7 slot and 2 slot risers installed**
- **4 port NVMe mezzanine card installed**

# of NVMe drives supported	Processor quantity	Cable part number	From	To	Power cable part number
16	3	870508-001[2]	Drive box 2, 8-NVMe drive cage	4 port mezzanine card	870479-001[3]
			Drive box 3, 8-NVMe drive cage	Primary 4 port riser	
16	4	870508-001[2]	Drive box 2, 8-NVMe drive cage	4 port mezzanine card	870479-001[3]
			Drive box 3, 8-NVMe drive cage	Primary 4 port riser	

* To order spare cables, use the following kits and spare part numbers.

- [1] NVMe cable kit (877983-001)
- [2] NVMe cable kit (881703-001)
- [3] USB 3.0 Ext. 600mm+SASPWR BP cable kit (881699-001)

Universal media bay cabling

With optional optical disk drive

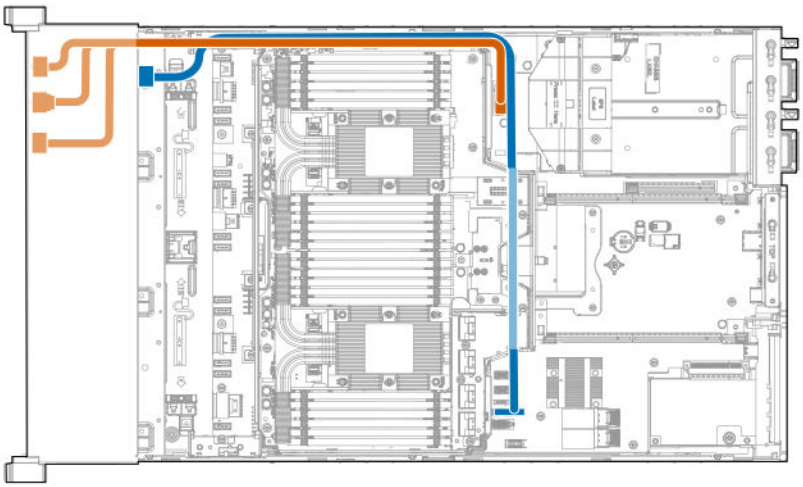

With optional 2SFF drive cage

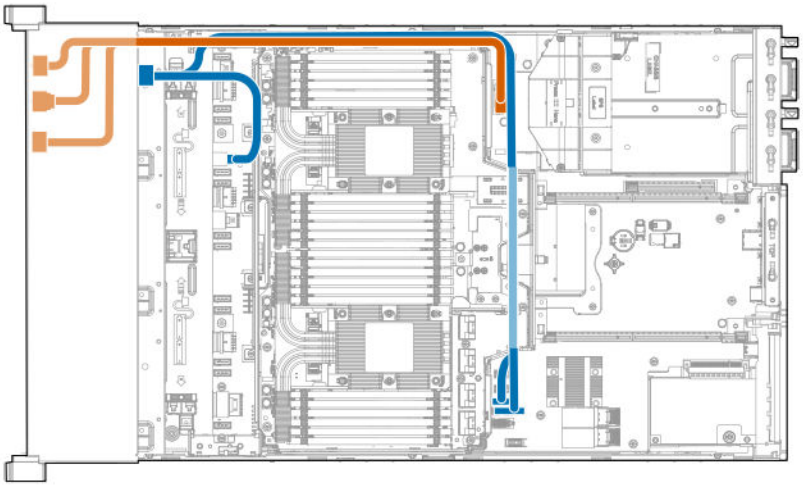

Front panel USB port cabling

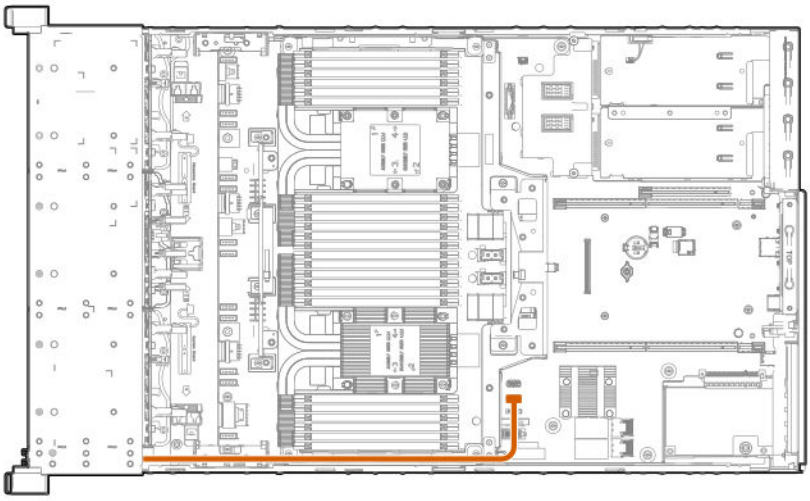

Power switch module/Systems Insight Display module cabling

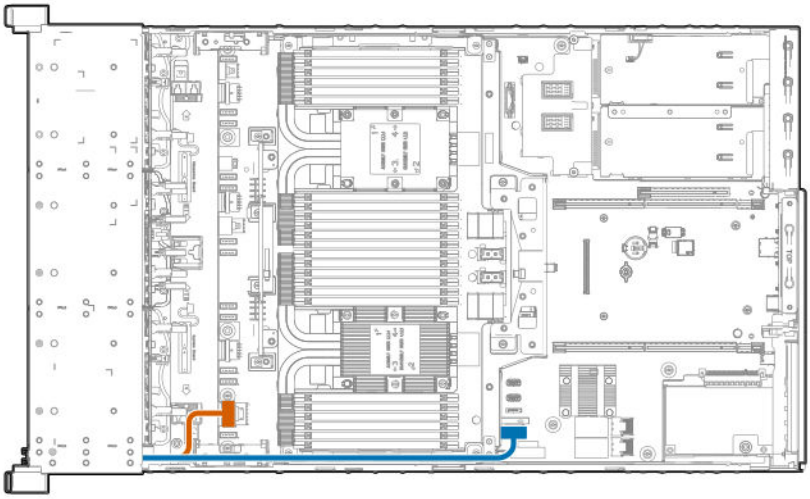

SFF HDD drive cage cabling

CAUTION: To avoid damage to the cables and server components, always route cables flat against the server walls, and separate the cables as they enter the primary riser cage. Bundled cables can be pinched or damaged when installing the fan cage or primary riser cage.

The following images define supported cable routing pathways between the eight-bay SFF HDD drive cage backplane and the riser cages. For more information, see the **Cable matrix**.

Drive cages to primary PCIe riser

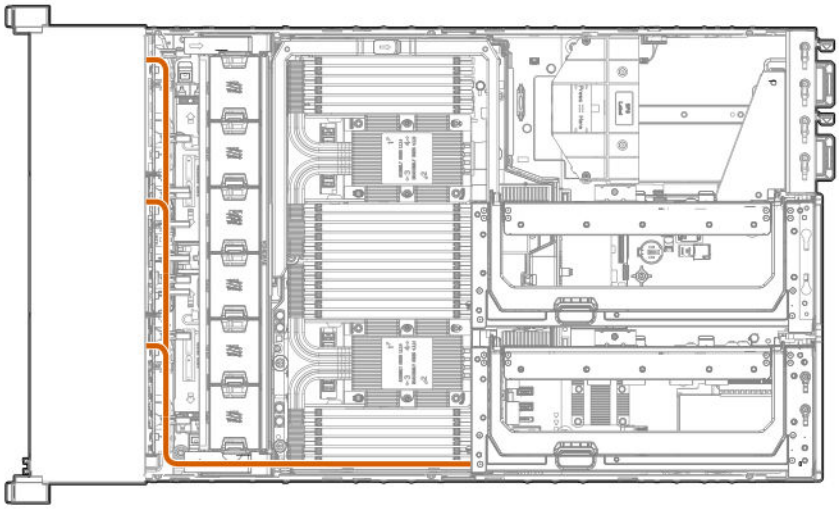

Drive cages to tertiary riser slot

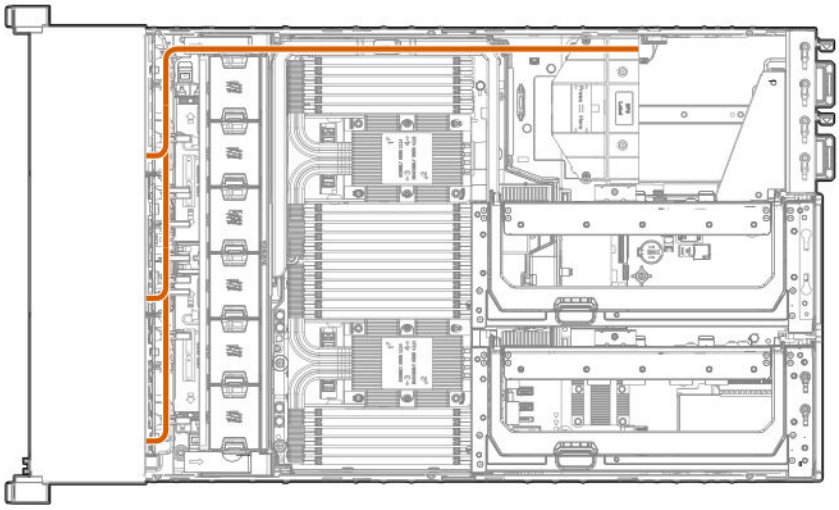

NVMe SSD drive cage cabling

CAUTION: To avoid damage to the cables and server components, always route cables flat against the server walls, and separate the cables as they enter the primary riser cage. Bundled cables can be pinched or damaged when installing the fan cage or primary riser cage.

The following images define supported cable routing for supported NVMe drive cage configurations:

- **NVMe drive cable matrix**
- **Eight-bay NVMe SSD drive cage cabling**

- **Six-bay SFF HDD/Two-bay NVMe SSD (Premium) drive cage cabling**
- **Two-bay SFF (Premium) drive cage**

Eight-bay NVMe SSD drive cage cabling

CAUTION: To avoid damage to the cables and server components, always route cables flat against the server walls, and separate the cables as they enter the primary riser cage. Bundled cables can be pinched or damaged when installing the fan cage or primary riser cage.

The following images define supported cable routing pathways between the Eight-bay NVMe SSD drive cage backplane and the riser cages. For more information on the supported configurations, see the **NVMe drive cable matrix**.

Drive box 1 to 4 port mezzanine card

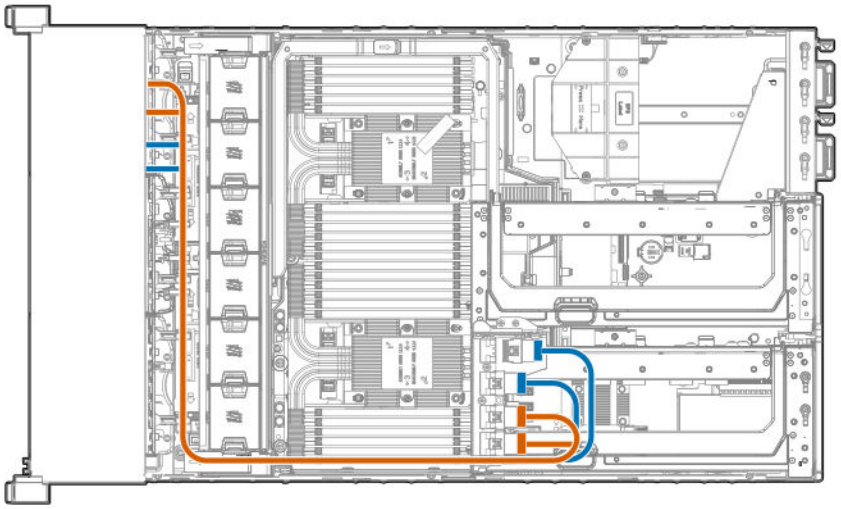

Drive box 1 to butterfly riser cage

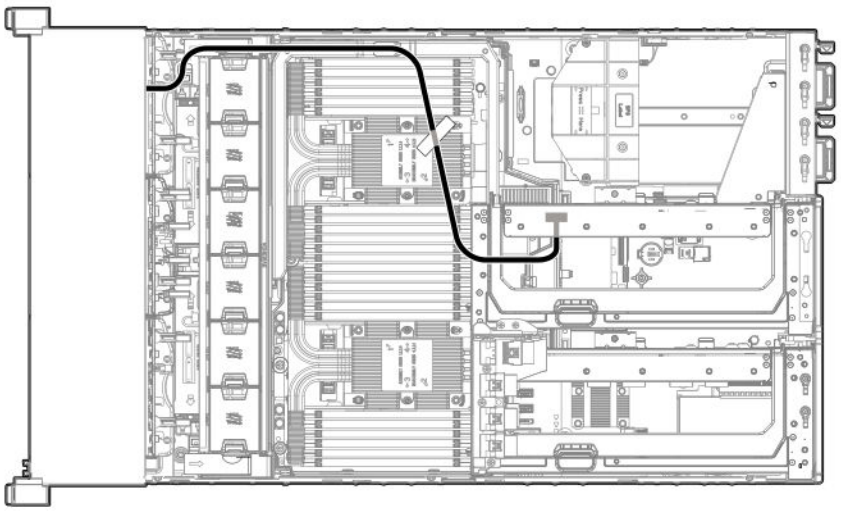

Drive box 2 to primary riser cage (4-drive configuration)

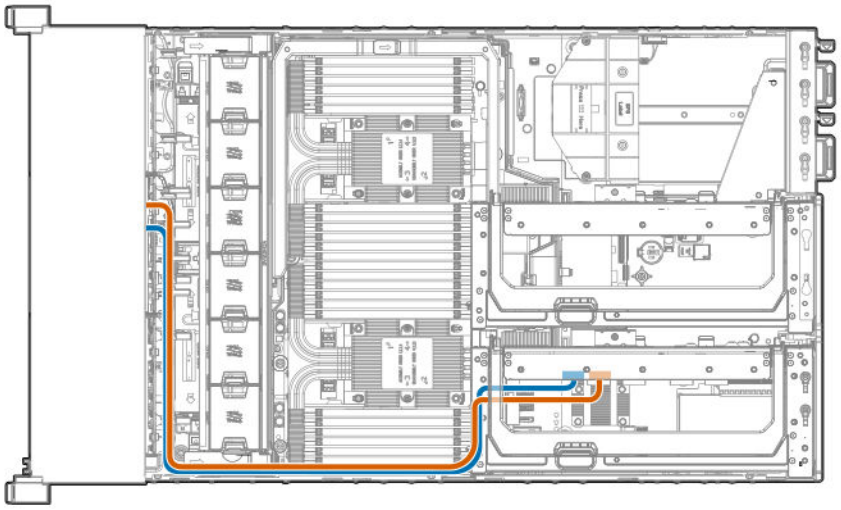

Drive box 2 to primary and butterfly riser cages (6-drives or fewer configuration)

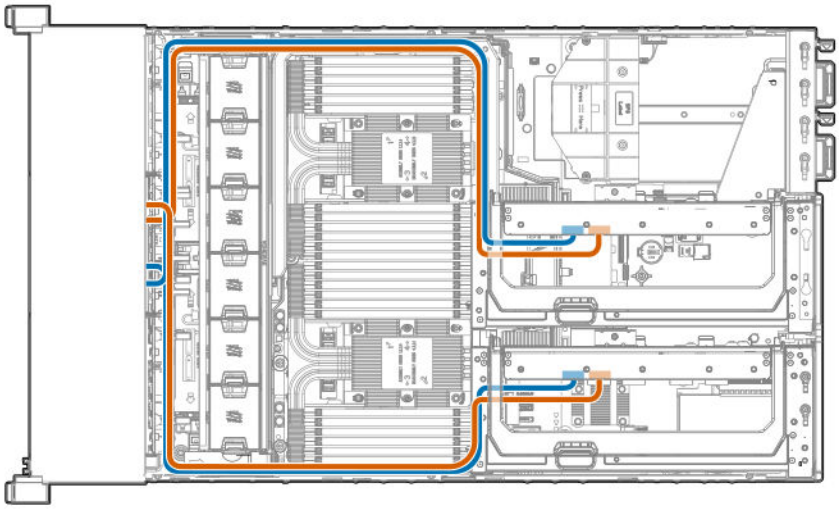

Drive box 2 to primary and butterfly riser cages (8-drive configuration)

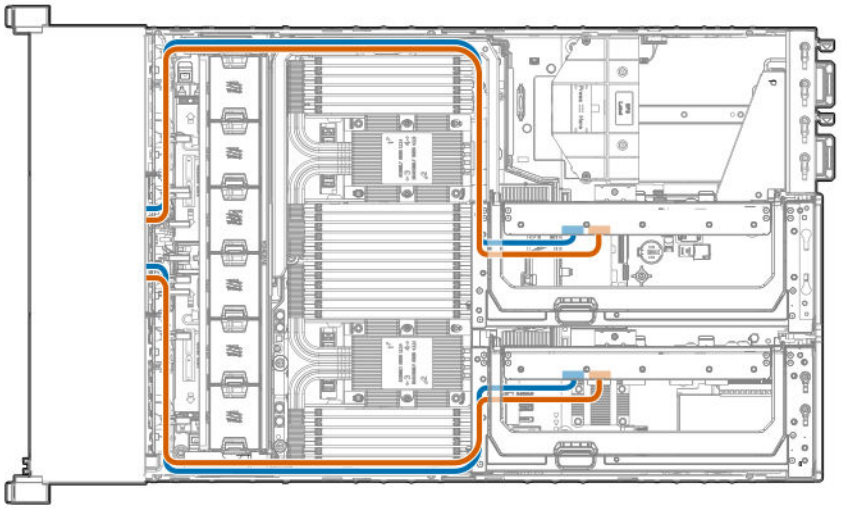

Drive box 2 to 4 port mezzanine card

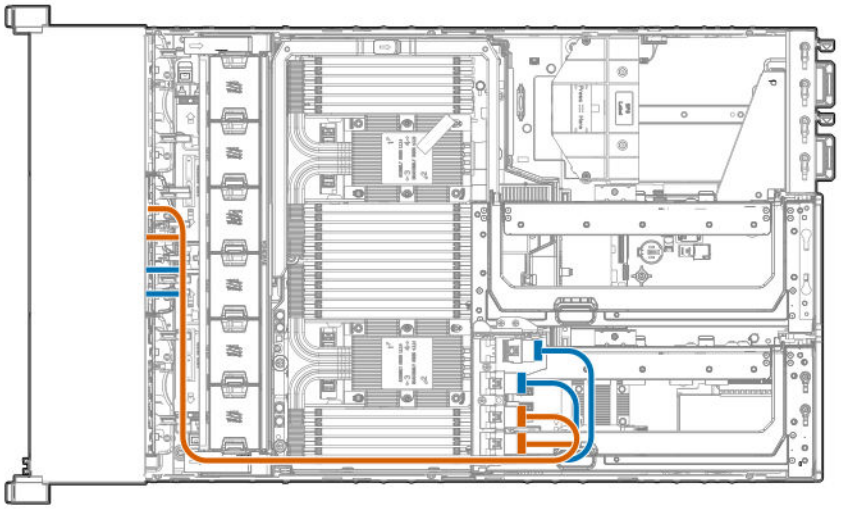

Drive box 3 to primary 4 port riser

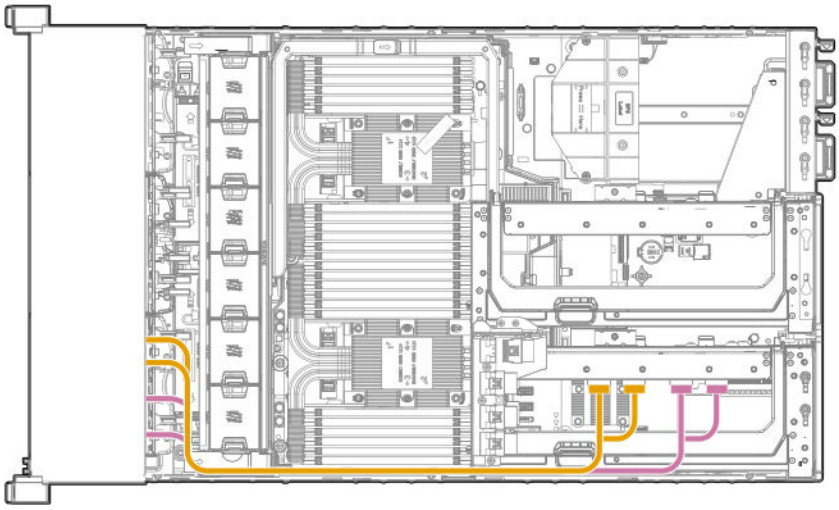

Drive box 2 to 4 port mezzanine card, Drive box 3 to primary 4 port riser (16-drive configuration)

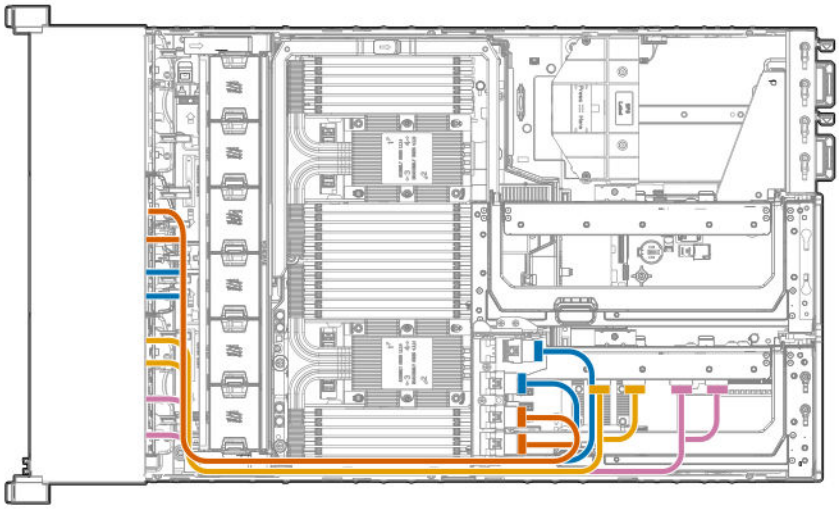

20-drive configuration

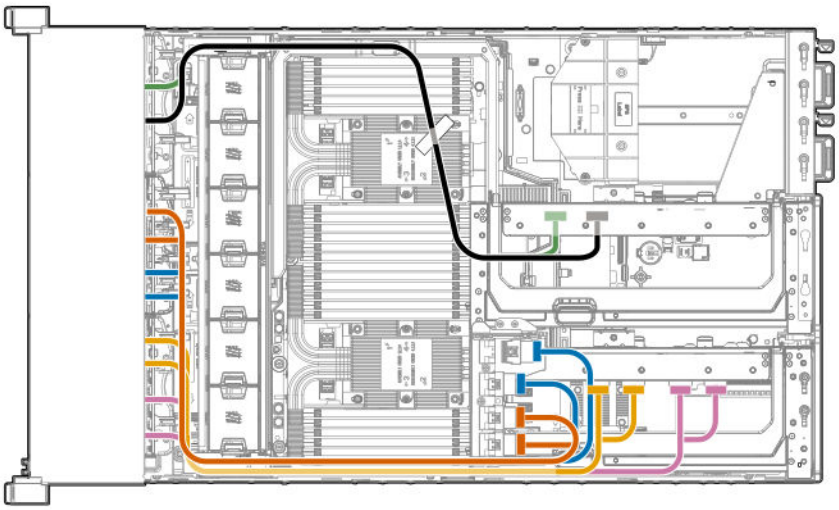

16-drive configuration, plus the following:

- Drive box 1 (six-bay HDD/two-bay NVMe Premium drive cage), connected to the 6 slot riser installed in the butterfly riser cage.
- Drive box 4 (universal media bay with two-bay SFF Premium drive cage), connected to the 6 slot riser installed in the butterfly riser cage.

Or:

Drive box 1 (eight-bay NVMe SSD drive cage, with four NVMe drives installed), connected to the 6 slot riser installed in the butterfly riser cage.

Six-bay SFF HDD/Two-bay NVMe SSD (Premium) drive cage cabling

CAUTION: To avoid damage to the cables and server components, always route cables flat against the server walls, and separate the cables as they enter the primary riser cage. Bundled cables can be pinched or damaged when installing the fan cage or primary riser cage.

The following images define supported cable routing pathways between the Six-bay SFF HDD/Two-bay NVMe SSD (Premium) drive cage backplane and the riser cages. For more information on the supported configurations, see the **NVMe drive cable matrix**.

Drive box 1

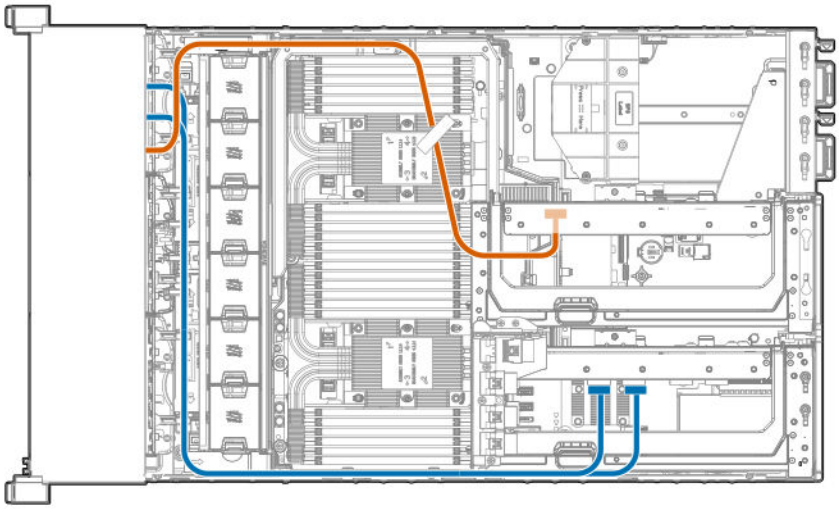

- NVMe drives cabled to the secondary riser cage
- SAS/SATA drives cabled to the primary riser cage

Drive box 2 or 5

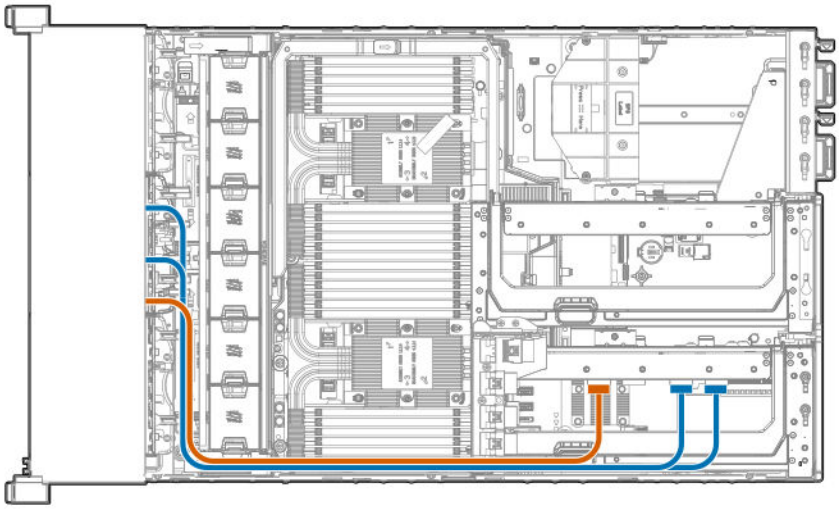

- NVMe drives cabled to the primary riser cage
- SAS/SATA drives cabled to the primary riser cage

Drive box 3 or 6

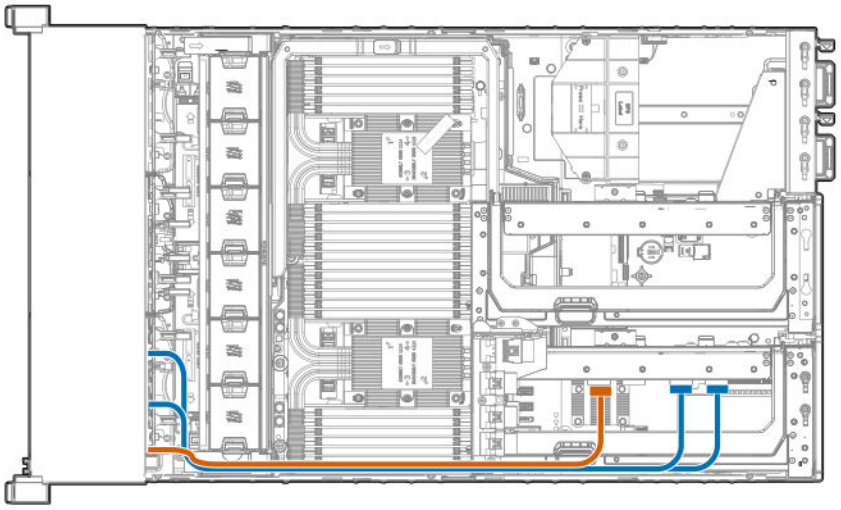

- NVMe drives cabled to the primary riser cage
- SAS/SATA drives cabled to the primary riser cage

Two-bay SFF (Premium) drive cage

CAUTION: To avoid damage to the cables and server components, always route cables flat against the server walls, and separate the cables as they enter the primary riser cage. Bundled cables can be pinched or damaged when installing the fan cage or primary riser cage.

The following images define supported cable routing pathways between the two-bay SFF (premium) drive cage backplane and the riser cages. For more information on the supported configurations, see one of the following:

- **Cable matrix**
- **NVMe drive cable matrix**

From drive box 4, to the primary riser cage

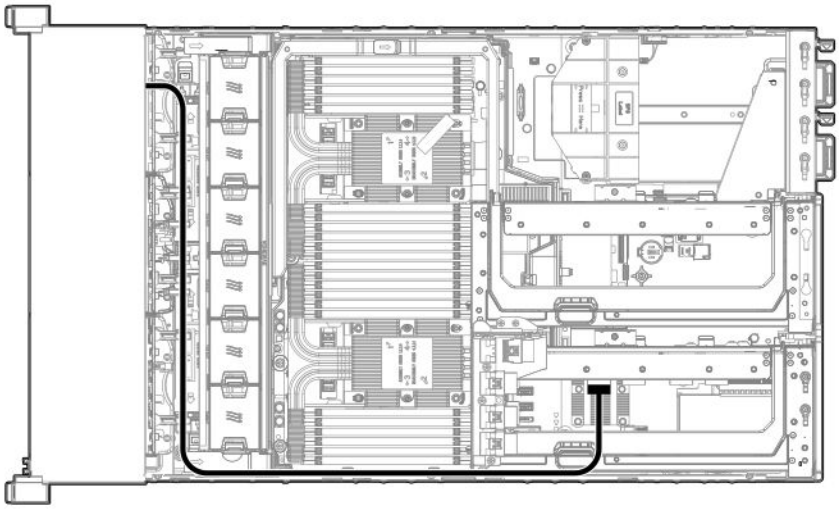

From drive box 4, to the butterfly riser cage

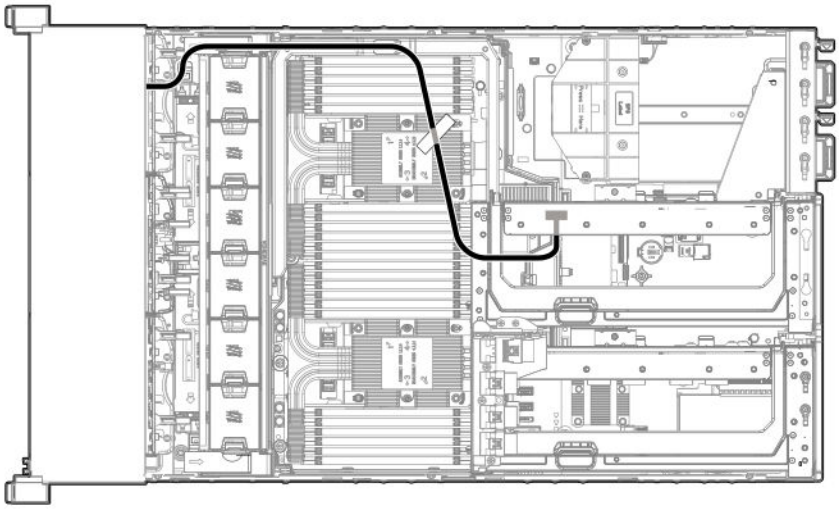

12G SAS expander cabling

CAUTION: To avoid damage to the cables and server components, always route cables flat against the server walls, and separate the cables as they enter the primary riser cage. Bundled cables can be pinched or damaged when installing the fan cage or primary riser cage.

24-drive configuration

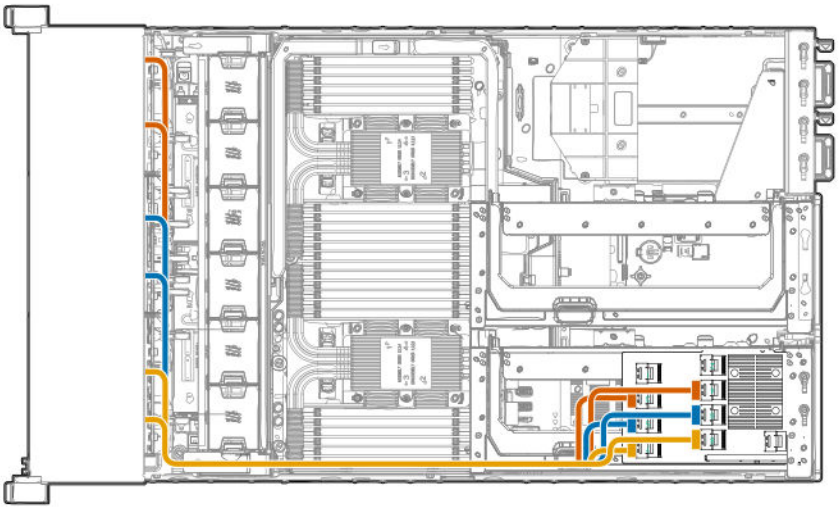

Cables from the lower drive box backplanes (boxes 4–6) are routed to the SAS expander card installed in the primary riser cage.

48-drive configuration

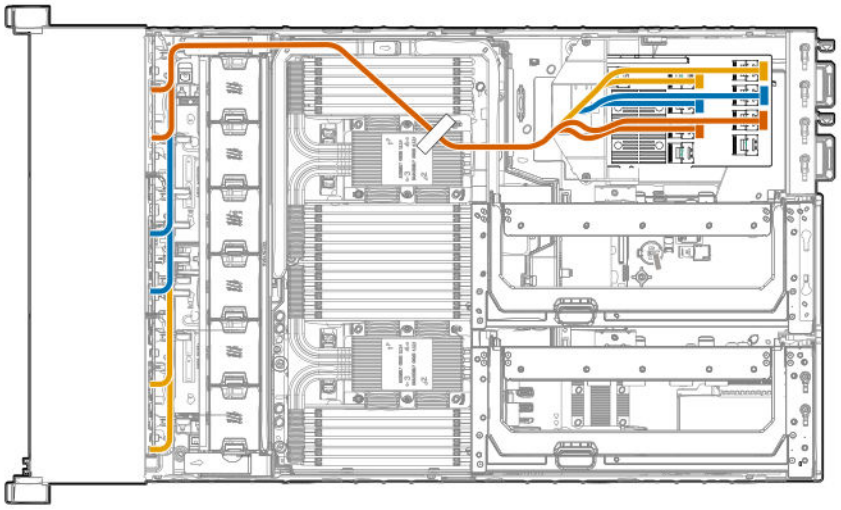

- Cables from the lower drive box backplanes are routed as shown in the 24-drive configuration.
- Cables from the upper drive box backplanes (boxes 1–3) are routed to the SAS expander card installed in the butterfly riser cage.

HPE Smart Array MR Gen10 controller cabling

CAUTION: To avoid damage to the cables and server components, always route cables flat against the server walls, and separate the cables as they enter the primary riser cage. Bundled cables can be pinched or damaged when installing the fan cage or primary riser cage.

Controller backup power cable

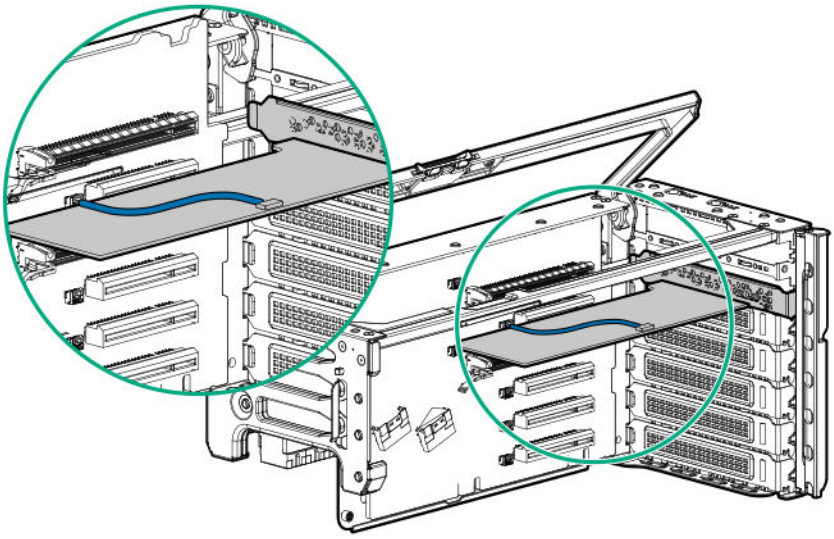

Using the shorter of the two cables provided, connect the controller backup power cable to the controller backup power connector on the riser board.

24-drive configuration

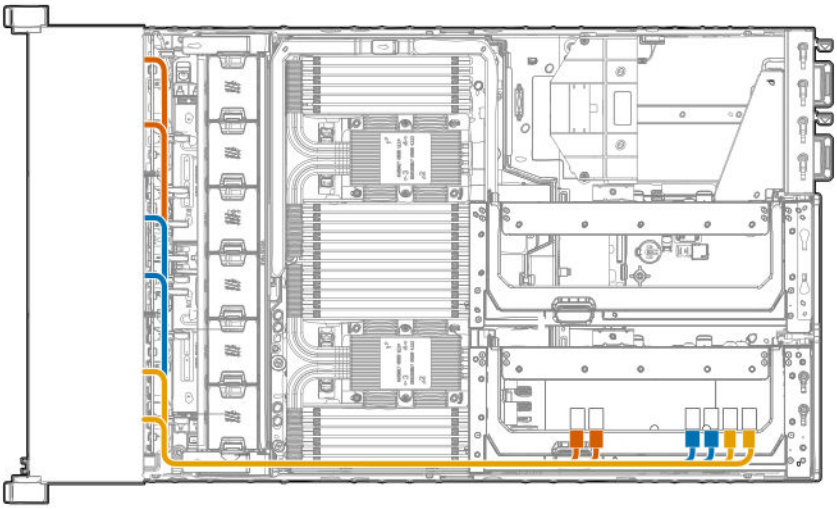

Cables from the lower drive box backplanes (boxes 4–6) are routed to the controller installed in the primary riser cage.

48-drive configuration

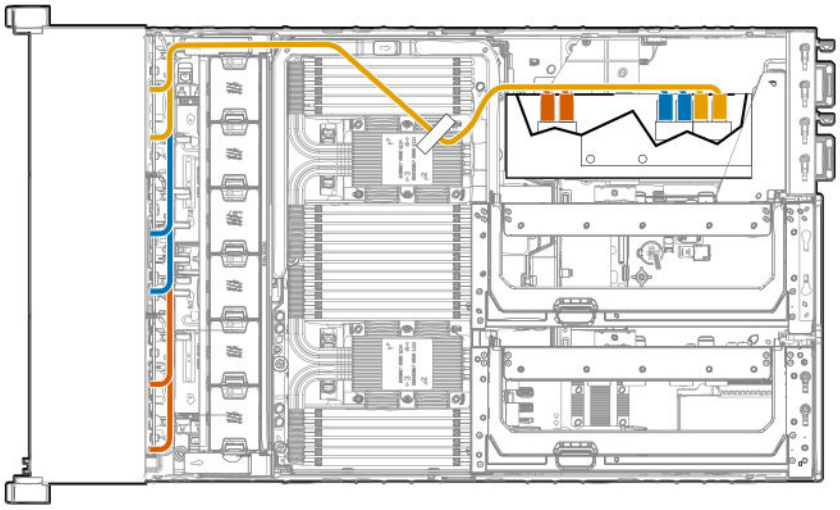

- Cables from the lower drive box backplanes are routed as shown in the 24-drive configuration.
- Cables from the upper drive box backplanes (boxes 1–3) are routed to the controller installed in the butterfly riser cage.

HPE Smart Storage Battery cabling

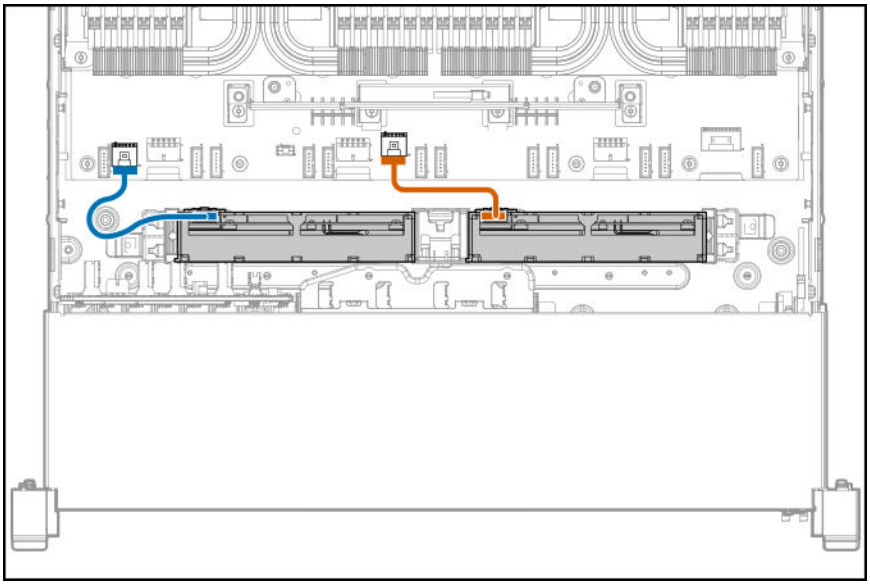

Cable	Description
Processor mezzanine tray energy pack cable[1]	Blue
System board energy pack cable[2]	Orange

1 This energy pack provides backup power to the NVDIMMs on processors 3 and 4.

2 This energy pack provides backup power to the NVDIMMs (processors 1 and 2) and the controllers installed on the system board.

NOTE: This server supports only the HPE Smart Storage Battery.

Specifications

Environmental specifications

Specification	Value
System Inlet Temperature, Standard Operating Support [1]	—
Operating	10°C to 35°C (50°F to 95°F)
Non-operating	-30°C to 60°C (-22°F to 140°F)
Relative humidity (non-condensing)	—
Operating	Minimum to be the higher (more moisture) of -12°C (10.4°F) dew point or 8% relative humidity Maximum to be 24°C (75.2°F) dew point or 90% relative humidity
Non-operating	5 to 95% relative humidity (Rh), 38.7°C (101.7°F) maximum wet bulb temperature, non-condensing.
Altitude	—
Operating	3050 m (10,000 ft) This value may be limited by the type and number of options installed. Maximum allowable altitude change rate is 457 m/min (1500 ft/min).
Non-operating	9144 m (30,000 ft) Maximum allowable altitude change rate is 457 m/min (1500 ft/min).

[1] All temperature ratings shown are for sea level. An altitude derating of 1.0°C per 305.0 m (1.8°F per 1000 ft) to 3050 m (10,000 ft) is applicable. No direct sunlight allowed. Maximum rate of change is 20°C per hour (36°F per hour). The upper limit and rate of change might be limited by the type and number of options installed. System performance during standard operating support may be reduced if operating with a fan fault or above 30°C (86°F).

The approved hardware configurations for this system are listed on the **Hewlett Packard Enterprise website**.

System Inlet Temperature, Extended Ambient Operating Support

Specification	Value
System Inlet Temperature, Extended Ambient Operating Support	—
—	For approved hardware configurations, the supported system inlet range is extended to be 5°C to 10°C (41°F to 50°F) and 35°C to 40°C (95°F to 104°F) All temperature ratings shown are for sea level with an altitude derating of 1.0 °C per every 175 m (1.8°F per every 574 ft) above 900 m (2953 ft) to a maximum of 3050 m (10,000 ft). [1]
—	For approved hardware configurations, the supported system inlet range is extended to be 40°C to 45°C (104°F to 113°F) All temperature ratings shown are for sea level with an altitude derating of 1.0 °C per every 125 m (1.8°F per every 410 ft) above 900 m (2953 ft) to a maximum of 3050 m (10,000 ft). [1]

[1] System performance may be reduced if operating in the extended ambient operating range or with a fan fault.

The approved hardware configurations for this system are listed on the **Hewlett Packard Enterprise website**.

Mechanical specifications

Specification	Value
Height	17.48 cm (6.88 in)
Depth	75.18 cm (29.60 in)
Width	44.55 cm (17.54 in)
Weight (maximum)	51.71 kg (114 lbs)
Weight (minimum)	28.12 kg (62 lbs)

Power supply specifications

Depending on installed options, the server is configured with one of the following power supplies:

- **HPE 800 W Flex Slot Platinum Hot-plug Low Halogen Power Supply**
- **HPE 800 W Flex Slot -48 VDC Hot-plug Low Halogen Power Supply**
- **HPE 1600 W Flex Slot Platinum Hot-plug Low Halogen Power Supply**

For detailed power supply specifications, see the QuickSpecs on the Hewlett Packard Enterprise website (**http://www.hpe.com/info/proliant/powersupply**).

HPE 800 W Flex Slot Platinum Hot-plug Low Halogen Power Supply

Specification	Value
Input requirements	—
Rated input voltage	100 VAC to 127 VAC 200 VAC to 240 VAC 240 VDC for China only
Rated input frequency	50 Hz to 60 Hz Not applicable to 240 VDC
Rated input current	9.1 A at 100 VAC 4.4 A at 200 VAC 3.6 A at 240 VDC for China only
Maximum rated input power	899 W at 100 VAC 867 W at 200 VAC 864 W at 240 VDC for China only
BTUs per hour	3067 at 100 VAC 2958 at 200 VAC 2949 at 240 VAC for China only
Power supply output	—
Rated steady-state power	800 W at 100 VAC to 127 VAC input 800 W at 100 VAC to 240 VAC input 800 W at 240 VDC input for China only
Maximum peak power	800 W at 100 VAC to 127 VAC input 800 W at 100 VAC to 240 VAC input 800 W at 240 VDC input for China only

HPE 800 W Flex Slot -48 VDC Hot-plug Low Halogen Power Supply

Specification	Value
Input requirements	—
Rated input voltage	-40 VDC to -72 VDC -48 VDC nominal input
Rated input current	22.1 A at -40 VDC input 18.2 A at -48 VDC input, nominal input 12.0 A at -72 VDC input
Rated input power (W)	874 W at -40 VDC input 865 W at -48 VDC input, nominal input 854 W at -72 VDC input
Rated input power (BTUs per hour)	2983 at -40 VDC input 2951 at -48 VDC input, nominal input 2912 at -72 VDC input
Power supply output	—
Rated steady-state power (W)	800 W at -40 VDC to -72 VDC
Maximum peak power (W)	800 W at -40 VDC to -72 VDC
Maximum peak power	800 W at -40 VDC to -72 VDC input

WARNING: To reduce the risk of electric shock or energy hazards:

- This equipment must be installed by trained service personnel.
- Connect the equipment to a reliably grounded secondary circuit source. A secondary circuit has no direct connection to a primary circuit and derives its power from a transformer, converter, or equivalent isolation device.
- The branch circuit overcurrent protection must be rated 27 A.

CAUTION: This equipment is designed to permit the connection of the earthed conductor of the DC supply circuit to the earthing conductor at the equipment.

If this connection is made, all of the following must be met:

- This equipment must be connected directly to the DC supply system earthing electrode conductor or to a bonding jumper from an earthing terminal bar or bus to which the DC supply system earthing electrode conductor is connected.
- This equipment must be located in the same immediate area (such as adjacent cabinets) as any other equipment that has a connection between the earthed conductor of the same DC supply circuit and the earthing conductor, and also the point of earthing of the DC system. The DC system must be earthed elsewhere.
- The DC supply source is to be located within the same premises as the equipment.
- Switching or disconnecting devices must not be in the earthed circuit conductor between the DC source and the point of connection of the earthing electrode conductor.

HPE 1600 W Flex Slot Platinum Hot-plug Low Halogen Power Supply

Specification	Value
Input requirements	—
Rated input voltage	200 VAC to 240 VAC 240 VDC for China only
Rated input frequency	50 Hz to 60 Hz
Rated input current	8.7 A at 200 VAC 7.2 A at 240 VAC
Maximum rated input power	1734 W at 200 VAC 1725 W at 240 VAC
BTUs per hour	5918 at 200 VAC 5884 at 240 VAC
Power supply output	—
Rated steady-state power	1600 W at 200 VAC to 240 VAC input 1600 W at 240 VDC input
Maximum peak power	2200 W for 1 ms (turbo mode) at 200 VAC to 240 VAC input

Websites

General websites

Single Point of Connectivity Knowledge (SPOCK) Storage compatibility matrix

https://www.hpe.com/storage/spock

Storage white papers and analyst reports

https://www.hpe.com/storage/whitepapers

For additional websites, see **Support and other resources**.

Support and other resources

Accessing Hewlett Packard Enterprise Support

- For live assistance, go to the Contact Hewlett Packard Enterprise Worldwide website:

  https://www.hpe.com/info/assistance

- To access documentation and support services, go to the Hewlett Packard Enterprise Support Center website:

  https://www.hpe.com/support/hpesc

Information to collect

- Technical support registration number (if applicable)
- Product name, model or version, and serial number
- Operating system name and version
- Firmware version
- Error messages
- Product-specific reports and logs
- Add-on products or components
- Third-party products or components

Accessing updates

- Some software products provide a mechanism for accessing software updates through the product interface. Review your product documentation to identify the recommended software update method.
- To download product updates:

  Hewlett Packard Enterprise Support Center

  https://www.hpe.com/support/hpesc

  Hewlett Packard Enterprise Support Center: Software downloads

  https://www.hpe.com/support/downloads

  My HPE Software Center

  https://www.hpe.com/software/hpesoftwarecenter

- To subscribe to eNewsletters and alerts:

  https://www.hpe.com/support/e-updates

- To view and update your entitlements, and to link your contracts and warranties with your profile, go to the Hewlett Packard Enterprise Support Center **More Information on Access to Support Materials** page:

  https://www.hpe.com/support/AccessToSupportMaterials

IMPORTANT: Access to some updates might require product entitlement when accessed through the Hewlett Packard Enterprise Support Center. You must have an HPE Passport set up with relevant entitlements.

Remote support

Remote support is available with supported devices as part of your warranty or contractual support agreement. It provides intelligent event diagnosis, and automatic, secure submission of hardware event notifications to Hewlett Packard Enterprise, which initiates a fast and accurate resolution based on the service level of your product. Hewlett Packard Enterprise strongly recommends that you register your device for remote support.

If your product includes additional remote support details, use search to locate that information.

HPE Get Connected

https://www.hpe.com/services/getconnected

HPE Pointnext Tech Care

https://www.hpe.com/services/techcare

HPE Complete Care

https://www.hpe.com/services/completecare

Warranty information

To view the warranty information for your product, see the links provided below:

HPE ProLiant and IA-32 Servers and Options

https://www.hpe.com/support/ProLiantServers-Warranties

HPE Enterprise and Cloudline Servers

https://www.hpe.com/support/EnterpriseServers-Warranties

HPE Storage Products

https://www.hpe.com/support/Storage-Warranties

HPE Networking Products

https://www.hpe.com/support/Networking-Warranties

Regulatory information

To view the regulatory information for your product, view the *Safety and Compliance Information for Server, Storage, Power, Networking, and Rack Products*, available at the Hewlett Packard Enterprise Support Center:

https://www.hpe.com/support/Safety-Compliance-EnterpriseProducts

Additional regulatory information

Hewlett Packard Enterprise is committed to providing our customers with information about the chemical substances in our products as needed to comply with legal requirements such as REACH (Regulation EC No 1907/2006 of the European Parliament and the Council). A chemical information report for this product can be found at:

https://www.hpe.com/info/reach

For Hewlett Packard Enterprise product environmental and safety information and compliance data, including RoHS and REACH, see:

https://www.hpe.com/info/ecodata

For Hewlett Packard Enterprise environmental information, including company programs, product recycling, and energy efficiency, see:

https://www.hpe.com/info/environment

Documentation feedback

Hewlett Packard Enterprise is committed to providing documentation that meets your needs. To help us improve the documentation, use the **Feedback** button and icons (located at the bottom of an opened document) on the Hewlett Packard Enterprise Support Center portal (**https://www.hpe.com/support/hpesc**) to send any errors, suggestions, or comments. All document information is captured by the process.