RETIRED: This document has been officially retired, and the base products listed herein are now considered obsolete and are no longer available for sale. Consequently, the information contained within may no longer be current. This document is provided exclusively for reference and informational purposes.

Overview

HPE Apollo 4510 Gen10 System

The HPE Apollo 4510 Gen10 System offers revolutionary storage density and accessibility in a 4U rack mount form factor. Fitting in HPE Standard 1075 mm racks and featuring a front-drawer design for its bulk data drives, it has one of the highest capacities of any 4U storage server with standard rack depth. When you are running Big Data solutions, such as object storage, data analytics, deep archive, or other data-intensive workloads, the HPE Apollo 4510 Gen10 System allows you to save valuable data center space. Its unique density-optimized and easy-access design accommodates a wide array of configuration choices, with support for two Intel® Xeon® Processors, sixteen DIMM slots, four I/O expansion slots, 60 large form factor bulk storage drive slots, two small form factor drive slots, and two M.2 internal drive slots.

HPE Apollo 4510 Gen10 System Front View

1. Bezel ear screws (2)
2. Drive drawer LEDs
3. LFF drive drawer 1
4. Drive drawer release button
5. Drive drawer release levers
6. Serial label pull tab
7. Server bay
8. Server node SFF drive bays (2)
9. Server ejector button
10. LFF drive drawer 2
11. Quick-release levers (2)
12. Backplane health LED
13. Drive health LED
14. UID LED
15. Server release lever
16. iLO Service Port
17. Server backup LED
18. SUV cable connector
19. Server health LED
20. UID LED/button
21. Power On/Standby button and system power LED

Overview

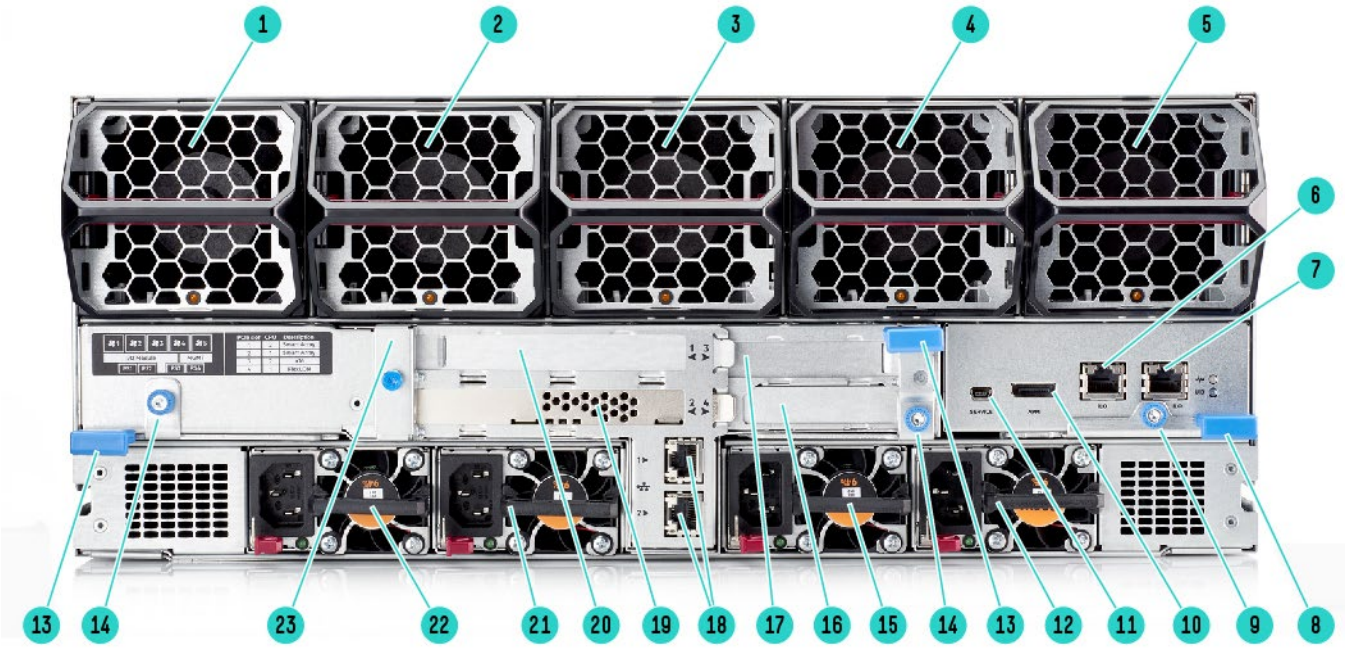

HPE Apollo 4510 Gen10 System Rear View

1. System fan 1
2. System fan 2
3. System fan 3
4. System fan 4
5. System fan 5
6. iLO port 2 (RJ-45)
7. iLO port 1 (RJ-45)
8. Management module release lever
9. Management module thumbscrew
10. APM connector
11. Reserved
12. Power Supply 4
13. I/O module release levers (2)
14. I/O module thumbscrews (2)
15. Power Supply 3
16. FlexLOM slot
17. PCIe slot 3
18. NIC ports (2)
19. PCIe slot 2
20. PCIe slot 1
21. Power Supply 2
22. Power Supply 1
23. I/O Module (shown as HPE Apollo 4500 Gen10 CPU0 x2/CPU1 x2 FIO I/O Module 882020-B21)

Overview

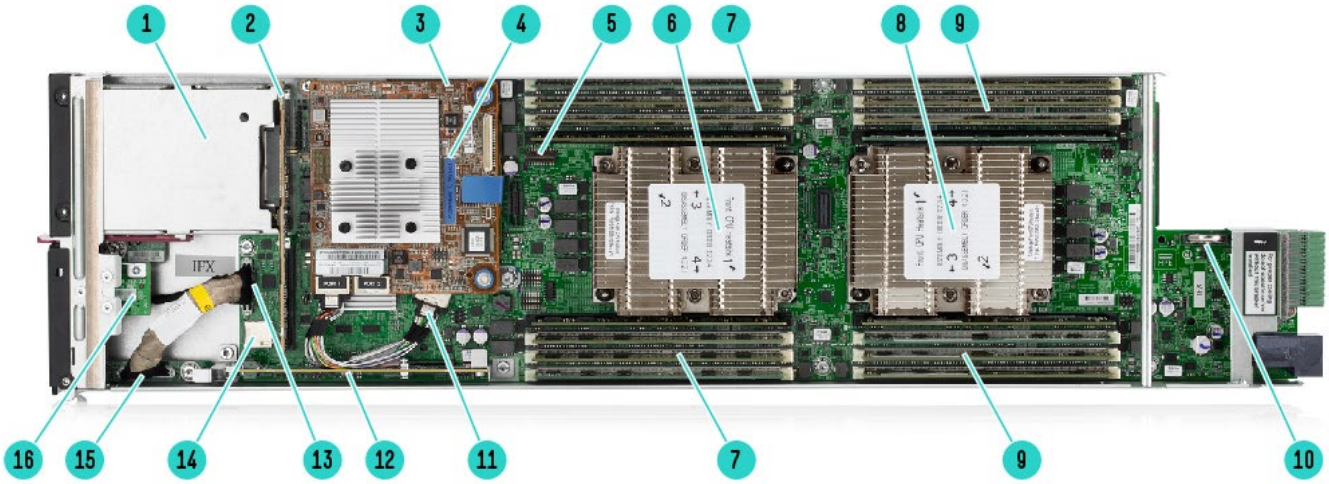

HPE Apollo 4510 Gen10 System Internal View

1. Drive cage
2. Drive backplane
3. TPM 2.0 connector
4. Controller connector
5. System maintenance switch
6. Processor 1
7. Processor 1 DIMMs (8)
8. Processor 2
9. Processor 2 DIMMs (8)
10. System battery
11. SFF drive cage data cable connector
12 M.2 riser board
13. Front panel I/O board cable connector
14. microSD card slot
15. Front panel I/O board
16. iLO Service Port board

HPE Apollo 4510 Gen10 System

Overview

What's New

- Support for HPE 20TB SAS and SATA Business Critical 7.2K HDDs increases the maximum raw capacity to over a petabyte and enable new archive use cases with even deeper storage capacities.
- New SAS 24Gb SSDs offer some future-proofing of storage media (though they will be limited to 12Gb/s on the Apollo 4510 Gen10).
- The HPE NS204i-p OS Boot Device is a dedicated hardware RAID1 solution that enables automatic operating system mirroring on the two included M.2 NVMe SSDs, keeping boot partitions off of bulk storage drives so that they can be used more productively and efficiently.
- Support for HPE 128GB/256GB/512GB Persistent Memory kits featuring Intel® Optane™ DC persistent memory. HPE Persistent Memory provides fast, high-capacity, cost-effective memory and storage to transform big data workloads and analytics possibilities—enabling data to be stored, moved, and processed at unprecedented speed, improving TCO.
- Support for HPE Very Read Optimized (VRO) SATA SFF and LFF SSDs: VRO SSDs are QLC NAND-based and have variable endurance levels optimized to certain workloads that are very read-centric. In those cases, VRO drives can act as HDD replacements for environments looking to standardize on flash storage.
- New designations for NVMe SSDs help customers choose the right balance of performance and price for their applications and use cases. NVMe “Mainstream” SSDs deliver better performance than SAS/SATA SSDs in both read-intensive and mixed-use endurance varieties. NVMe “High Performance” SSDs offer better overall performance than NVMe Mainstream and are optimized for read performance in particular.
- Value SAS SSDs offer twice the interface speed of SATA at a lower cost than traditional enterprise-class SAS SSDs and are an alternative to Mainstream NVMe SSDs.
- The new Pensando Distributed Services Platform (DSP) for HPE systems delivers a powerful and scalable suite of software-defined network and security services like firewall, micro-segmentation, and telemetry to the server edge, where the transition between network and server occurs.

Standard Features

Processors

Notes: For more information regarding Intel Xeon processors, please see the following **http://www.intel.com/xeon**.

Intel Xeon Scalable Models						
	CPU Frequency	**Cores**	**L3 Cache**	**Power**	**DDR4**	**Memory per socket**
Gold 6200 series						
Gold 6252 Processor	2.1 GHz	24	35.75 MB	150W	2933 MT/s	768 GB
Gold 6248 Processor	2.5 GHz	20	27.50 MB	150W	2933 MT/s	768 GB
Gold 6242 Processor	2.8 GHz	16	22.00 MB	150W	2933 MT/s	768 GB
Gold 6240 Processor	2.6 GHz	18	24.75 MB	150W	2933 MT/s	768 GB
Gold 6234 Processor	3.3 GHz	8	24.75 MB	130W	2933 MT/s	768 GB
Gold 6230R Processor	2.1 GHz	26	27.50 MB	150W	2933 MT/s	768 GB
Gold 6230 Processor	2.1 GHz	20	27.50 MB	125W	2933 MT/s	768 GB
Gold 6226R Processor	2.9 GHz	16	19.25 MB	150W	2933 MT/s	768 GB
Gold 6226 Processor	2.7 GHz	12	19.25 MB	125W	2933 MT/s	768 GB
Gold 5200 series						
Gold 5220R Processor	2.2 GHz	24	24.75 MB	150W	2666 MT/s	768 GB
Gold 5220 Processor	2.2 GHz	18	24.75 MB	125W	2666 MT/s	768 GB
Gold 5218R Processor	2.1 GHz	20	22.00 MB	125W	2666 MT/s	768 GB
Gold 5218 Processor	2.3 GHz	16	22.00 MB	125W	2666 MT/s	768 GB
Gold 5215 Processor	2.5 GHz	10	13.75 MB	85W	2666 MT/s	768 GB
Silver 4200 series						
Silver 4216 Processor	2.1 GHz	16	22.00 MB	100W	2400 MT/s	768 GB
Silver 4215R Processor	3.2 GHz	8	11.00 MB	130W	2400 MT/s	768 GB
Silver 4215 Processor	2.5 GHz	8	11.00 MB	85W	2400 MT/s	768 GB
Silver 4214R Processor	2.4 GHz	12	16.50 MB	100W	2400 MT/s	768 GB
Silver 4214 Processor	2.2 GHz	12	16.50 MB	85W	2400 MT/s	768 GB
Silver 4210R Processor	2.4 GHz	10	13.75 MB	100W	2400 MT/s	768 GB
Silver 4210 Processor	2.2 GHz	10	13.75 MB	85W	2400 MT/s	768 GB
Silver 4208 Processor	2.1 GHz	8	11.00 MB	85W	2400 MT/s	768 GB

Notes: Up to 2 processors supported. Mixing different processor models is not supported.

Chipset

Intel® C621 Chipset. For more information about Intel® chipsets, please go to:
https://www.intel.com/content/www/us/en/products/chipsets/server-chipsets.html

On System Management Chipset

HPE iLO 5. ASIC Read and learn more in the **iLO QuickSpecs.**

Memory

Type	HPE DDR4 Smart Memory, Registered (RDIMM), Load Reduced (LRDIMM)
DIMM Slots Available	16 DIMM slots available with 2 processors, 6 channels per processor, Up to 2 DIMMs per channel
Maximum capacity (LRDIMM)	1024 GB (16 x 64GB LRDIMM)
Maximum capacity (RDIMM)	512 GB (16 x 32GB RDIMM)

Notes:

- Mixing of RDIMM and LRDIMM memory is not supported.
- The maximum memory by socket is limited by processor specification
- Intel Xeon Gold 62xx processors that support 2933 MT/s DIMMs will do so only at 1 DIMM per channel. Configuring 2 DIMMs per channel will drop memory speed back to 2666 MT/s.

Standard Features

- HPE Persistent Memory featuring Intel® Optane™ DC persistent memory is only supported with select 2nd-generation Intel Xeon Scalable Series Processors ONLY (62xx/52xx/4215) and can only be mixed with either RDIMMs or LRDIMMs.
- For General Server Memory Population Rules and Guidelines for Gen10 see details here: **http://www.hpe.com/docs/memory-population-rules**

Memory Protection

For details on the HPE Server Memory Options RAS feature, visit: **http://www.hpe.com/docs/memory-ras-feature.**

Expansion Slots

HPE Apollo 4500 Gen10 CPU0 x2/CPU1 x2 FIO I/O Module (default)					
Expansion Slots #	**Technology**	**Bus Width**	**Connector Width**	**Form Factor**	**Notes**
1	PCIe 3.0	X16	X16	Full-height, half-length slot	Proc 2; SA
2	PCIe 3.0	X16	X16	Full-height, half-length slot	Proc 1; SA
3	PCIe 3.0	X16	X16	Low profile slot	Proc 2
4	PCIe 3.0	X8	N/A	FlexLOM	Proc 1
HPE Apollo 4500 Gen10 CPU0 x3/CPU1 x1 FIO I/O Module					
Expansion Slots #	**Technology**	**Bus Width**	**Connector Width**	**Form Factor**	**Notes**
1	PCIe 3.0	X8	X8	Full-height, half-length slot	Proc 1; SA
2	PCIe 3.0	X8	X8	Full-height, half-length slot	Proc 1; SA
3	PCIe 3.0	X16	X16	Low profile slot	Proc 2
4	PCIe 3.0	X8	N/A	FlexLOM	Proc 1

Notes:

- Indicates the number of physical electrical lanes running to the connector.
- The slots supported by Proc 2 will work when the second processor is installed.

Storage Controllers

For a more details about supported Smart Array controllers visit
https://support.hpe.com/hpesc/public/docDisplay?docLocale=en_US&docId=emr_na-a00039156en_us

Storage Controllers Dedicated to XL450 Gen10 Server Node

- HPE Smart Array S100i SR Gen10 Software RAID

Notes: HPE Smart Array S100i SR Gen10 SW RAID will operate in UEFI mode only. For legacy support an additional controller will be needed, and for CTO orders please also select the Legacy mode settings part, 758959-B22.

- HPE Smart Array E208i-a SR Gen10 Controller
- HPE Smart Array P408i-a SR Gen10 Controller

Notes:

- E208i-a and P408i-a connect to the 2 SFF drives in the server node and provide capability for (up to) 12G SAS or 6G SATA hardware RAID/HBA functionality.
- If SFF SAS drives are selected, E208i-a or P408i-a is required.
- If SFF NVMe SSDs are selected, an HPE Smart Array controller is not required.
- Performance RAID Controllers (P series) require purchase of one HPE Smart Storage Battery (P01366-B21) per chassis.

Storage Controllers Dedicated to 60 LFF Drawer Bulk Drive Slots

For hardware RAID/HBA of bulk storage LFF drives, a minimum of one of the following controllers is required (and up to two like controllers are supported):

- HPE Smart Array E208i-p SR Gen10 Controller
- HPE Smart Array P408i-p SR Gen10 Controller

Notes: Performance RAID Controllers (P series) require purchase of one HPE Smart Storage Battery (P01366-B21) per chassis.

Standard Features

SAS Controllers for External Bulk Drive Enclosures

- HPE Smart Array E208e-p SR Gen10 Controller
- HPE Smart Array P408e-p SR Gen10 Controller

Notes:

– Performance RAID Controllers (P series) require purchase of one HPE Smart Storage Battery (P01366-B21) per chassis.
– SAS controllers for internal bulk drives reside in I/O module in the system.

HPE Smart Storage Battery

HPE 96W Smart Storage Battery (up to 20 Devices) with 145mm Cable Kit (P01366-B21)

- HPE Smart Array P408i-a SR Gen10 Controller
- HPE Smart Array P408i-p SR Gen10 Controller
- HPE Smart Array P408e-p SR Gen10 Controller

Notes: One Smart Storage Battery per chassis is required if one of the following controllers has been selected on a server node:

Internal Storage Devices	
Hard Drives / SSDs	None ship standard
Drive Bays	Two (2) SFF NVMe/SAS/SATA drive bays total in the HPE ProLiant XL450 Gen10 Server Sixty (60) LFF SAS/SATA drive bays total in the HPE Apollo 4510 Gen10 Chassis
M.2 Riser Board	Two (2) M.2 22110 NVMe drive slots in the HPE ProLiant XL450 Gen10 Server

Maximum Internal Storage		
Drives	**Maximum Capacity (raw)**	**Configuration**
Hot Plug LFF SAS HDD	1200TB	60 x 20TB
Hot Plug LFF SATA HDD	1200TB	60 x 20TB
Hot Plug LFF SAS SSD	96TB	60 x 1.6TB
Hot Plug LFF SATA SSD	460.8TB	60 x 7.68TB
Hot Plug SFF SAS HDD	4.8TB	2 x 2.4TB
Hot Plug SFF SATA HDD	4TB	2 x 2TB
Hot Plug SFF NVMe SSD	30.7TB	2 x 15.36TB
Hot Plug SFF SAS SSD	30.7TB	2 x 15.36TB
Hot Plug SFF SATA SSD	15.36TB	2 x 7.68TB
M.2 Riser Board	3.84TB	2 x 1.92TB

Power Supplies

HPE 800W Flex Slot Platinum Hot Plug Low Halogen Power Supply Kit

Notes:

– Available in 94% and 96% efficiency.
– Also available in -48VDC and 227VAC/380VDC power inputs.

HPE 1600W Flex Slot Platinum Hot Plug Low Halogen Power Supply Kit

Notes: Available in 94% efficiency.

HPE Flexible Slot (Flex Slot) Power Supplies share a common electrical and physical design that allows for hot plug, tool-less installation into HPE ProLiant Gen10 Performance Servers. Flex Slot power supplies are certified for high-efficiency operation and offer multiple power output options, allowing users to "right-size" a power supply for specific server configurations. This flexibility helps to reduce power waste, lower overall energy costs, and avoid "trapped" power capacity in the data center.

If a different power cord is required, please check the **ProLiant Power Cables** web page.
To review the power requirements for your selected system, please use the **HPE Power Advisor Tool**.
For information on power specifications and technical content visit **HPE Server power supplies**.

Standard Features

System Fans

System ships standard with 5 hot-plug fan modules.

Interfaces

Network RJ-45	Two 1GbE NIC ports **Notes:** Customers can elect to use a FlexibleLOM, which enables customers to increase I/O capacity
Network Controller	HPE 1Gb Ethernet 2-Port 331i Adapter
iLO Management Network Ports	Two 1GbE Dedicated **Notes:** Management port is shared (located on management module)
Front iLO Service Port	1 front
Health LED	1 front
Power	1 front
UID for node	1 front
UID for storage	1 per display board
SUV	Serial + USB + video (all in one) **Notes:** HPE 36pin SUV Dongle Cord Kit P/N is 676277-B21
Micro SD Slot	1 Micro SD **Notes:** The Micro SD slot is not a hot-pluggable device. Customers should not attempt to plug an SD card into the SD slot while the server is powered.

Graphics

Integrated Video Standard
Video modes up to 1920 x 1200@60Hz (32 bpp)

Form Factor

4U form factor

Operating Systems and Virtualization Software Support

- **Microsoft Windows Server**
- **Red Hat Enterprise Linux (RHEL)**
- **SUSE Linux Enterprise Server (SLES)**
- **VMware**

Notes:

– Only 64-bit versions of these operating systems are supported.
– For more information on Hewlett Packard Enterprise's Certified and Supported ProLiant Servers for OS and Virtualization Software and latest listing of software drivers available for your server including how to purchase from Hewlett Packard Enterprise, please visit our OS Support Site at: **https://www.hpe.com/us/en/servers/server-operating-systems.html** and our **driver download page**.

Standard Features

Embedded Management

HPE Integrated Lights-Out (HPE iLO)

Monitor your servers for ongoing management, service alerting, reporting and remote management with HPE iLO. Learn more at **http://www.hpe.com/info/ilo**.

UEFI

Configure and boot your servers securely with industry standard Unified Extensible Firmware Interface (UEFI). Learn more at **http://www.hpe.com/servers/uefi**.

Intelligent Provisioning

Hassle free server and OS provisioning for 1 or more servers with Intelligent Provisioning. Learn more at **http://www.hpe.com/servers/intelligentprovisioning**.

iLO RESTful API

iLO RESTful API is Redfish API conformance and offers simplified server management automation such as configuration and maintenance tasks based on modern industry standards. Learn more at **http://www.hpe.com/info/restfulapi**.

System Utilities

InfoSight for Servers

HPE InfoSight for Servers combines the machine learning and predictive analytics of HPE InfoSight with the health and performance monitoring of Active Health System (AHS) and HPE Integrated Lights Out (iLO) to optimize performance and predict and prevent problems. HPE InfoSight for Servers nearly eliminates wasted time and headaches by transforming how infrastructure is managed and supported. AHS is like a “flight recorder” for your server that provides continuous, proactive health monitoring and recording thousands of system parameters and diagnostic telemetry data 24x7 on the server. HPE InfoSight for Servers analyzes the telemetry data from AHS to derive insights from the behaviors of the install base to provide recommendations to resolve problems and improve performance. iLO Amplifier pack (see below) is required to connect to InfoSight for servers. Learn more at **http://www.hpe.com/info/infosight-servers-docs**.

iLO Amplifier Pack

Designed for large enterprise and service provider environments with hundreds of HPE servers, the iLO Amplifier Pack is a free, downloadable open virtual application (OVA) that delivers the power to discover, inventory and update Gen8, Gen9 and Gen10 HPE servers at unmatched speed and scale. Use with an iLO Advanced License to unlock full capabilities. Learn more at **http://www.hpe.com/servers/iLOamplifierpack**.

Active Health System

The HPE Active Health System (AHS) is an essential component of the iLO management portfolio that provides continuous, proactive health monitoring of HPE servers. Learn more at **http://www.hpe.com/servers/ahs**.

Active Health System Viewer

Use the Active Health System Viewer, a web-based portal, to easily read AHS logs and speed problem resolution with HPE self-repair recommendations, to learn more visit: **http://www.hpe.com/servers/ahsv**.

Standard Features

Smart Update
Keep your servers up to date with the HPE Smart Update solution by using Smart Update Manager (SUM) to optimize the firmware and driver updates of the Service Pack for ProLiant (SPP).
Learn more at **https://www.hpe.com/us/en/servers/smart-update.html**

RESTful Interface Tool
RESTful Interface tool (iLOREST) is a single scripting tool to provision using iLO RESTful API to discover and deploy servers at scale. Learn more at **http://www.hpe.com/info/resttool**.

Scripting Tools
Provision one to many servers using your own scripts to discover and deploy with Scripting Tool (STK) for Windows and Linux or Scripting Tools for Windows PowerShell. Learn more at **http://www.hpe.com/servers/powershell**

HPE Systems Insight Manager (HPE SIM)
Ideal for environments already using HPE SIM, it allows you to monitor the health of your HPE ProLiant Servers and HPE Integrity Servers. Also provides you with basic support for non-HPE servers. HPE SIM also integrates with Smart Update Manager to provide quick and seamless firmware updates. Learn more at **http://www.hpe.com/info/hpesim**.

Security
- UEFI Secure Boot and Secure Start support
- Immutable Silicon Root of Trust
- FIPS 140-2 validation (iLO 5 certification in progress)
- Common Criteria certification (iLO 5 certification in progress)
- Tamper-free updates – components digitally signed and verified
- Secure Recovery – recover critical firmware to known good state on detection of compromised firmware
- Ability to rollback firmware
- Secure erase of NAND/User data
- TPM (Trusted Platform Module) 2.0 option

Warranty
This product is covered by a global limited warranty and supported by HPE Services and a worldwide network of HPE Authorized Channel Partners resellers. Hardware diagnostic support and repair is available for three years from date of purchase. Support for software and initial setup is available for 90 days from date of purchase. Enhancements to warranty services are available through HPE Services operational services or customized service agreements. Hard drives have either a one year or three year warranty; refer to the specific hard drive QuickSpecs for details.

Notes: System Warranty includes 3-Year Parts, 3-Year Labor, 3-Year Onsite support with next business day response. Warranty repairs may be accomplished through the use of Customer Self Repair (CSR) parts. These parts fall into two categories: 1) Mandatory CSR parts are designed for easy replacement. A travel and labor charge will result when customers decline to replace a Mandatory CSR part; 2) Optional CSR parts are also designed for easy replacement but may involve added complexity. Customers may choose to have Hewlett Packard Enterprise replace Optional CSR parts at no charge. Additional information regarding worldwide limited warranty and technical support is available at:
http://www.hpe.com/support/ProLiantServers-warranties .

Optional Features

System Management

HPE iLO Advanced

HPE iLO Advanced licenses offer smart remote functionality without compromise for all HPE ProLiant servers (and HPE Apollo 4000 systems). The license includes the full integrated remote console, virtual keyboard, video, and mouse (KVM), multi-user collaboration, console record and replay, and GUI-based and scripted virtual media and virtual folders. You can also activate the enhanced security and power management functionality. Learn more about HPE iLO Advanced and download a trial license at **http://www.hpe.com/us/en/servers/integrated-lights-out-ilo.html**

HPE iLO Advanced Premium Security Edition

HPE iLO Advanced Premium Security Edition for iLO 5 includes iLO Advanced License plus high-end security modes, unique security capabilities, like Automatic FW recovery; Runtime FW verification, and Secure erase. Learn more about HPE iLO Advanced Premium Security Edition at **http://www.hpe.com/us/en/servers/integrated-lights-out-ilo.html**.

HPE OneView

HPE OneView Standard can be used for inventory, health monitoring, alerting, and reporting without additional fees. It can monitor multiple HPE server generations. The user interface is similar to the HPE OneView Advanced version, but the software-defined functionality is not available. Learn more at **http://www.hpe.com/info/oneview**.

HPE Insight Cluster Management Utility (CMU)

HPE Insight Cluster Management Utility is a HyperScale management framework that includes software for the centralized provisioning, management and monitoring of nodes and infrastructure.

Learn more at **https://h20195.www2.hpe.com/v2/getdocument.aspx?docname=c04111735**.

Rack and Power Infrastructure

The story may end with servers, but it starts with the foundation that makes compute go – and business grow. We've reinvented our entire portfolio of rack and power products to make IT infrastructure more secure, more practical, and more efficient. In other words, we've created a stronger, smarter, and simpler infrastructure to help you get the most out of your IT equipment. As an industry leader, Hewlett Packard Enterprise is uniquely positioned to address the key concerns of power, cooling, cable management and system access.

HPE G2 Advanced and Enterprise Racks are perfect for the server room or today's modern data center with enhanced airflow and thermal management, flexible cable management, and a 10 year Warranty to support higher density computing.

HPE G2 PDUs offer reliable power in flexible form factors that operate at temperatures up to 60°C, include color-coded outlets and load segments and a low-profile design for optimal access to the rack and support for dense rack environments.

HPE Uninterruptible Power Systems are cost-effective power protection for any type workload. Some UPSs include options for remote management and extended runtime modules so you're critical dense data center is covered in power outages.

HPE KVM Solutions include a console and switches designed to work with your server and IT equipment reliably. We've got a cost-effective KVM switch for your first rack and multiple connection IP switches with remote management and security capabilities to keep your data center rack up and running.

Learn more about HPE Racks, KVM, PDUs and UPSs at **HPE Rack and Power Infrastructure**.

One Config Simple (SCE)

SCE is a guided self-service tool to help sales and non-technical people provide customers with initial configurations in 3 to 5 minutes. You may then send the configuration on for configuration help, or use in your existing ordering processes. If you require "custom" rack configuration or configuration for products not available in SCE, please contact Hewlett Packard Enterprise Customer Business Center or an Authorized Partner for assistance.
https://h22174.www2.hpe.com/SimplifiedConfig/Welcome#

Service and Support

HPE Services

No matter where you are in your digital transformation journey, you can count on HPE Services to deliver the expertise you need when, where and how you need it. From planning to deployment, ongoing operations and beyond, our experts can help you realize your digital ambitions.
https://www.hpe.com/services

Consulting Services

No matter where you are in your journey to hybrid cloud, experts can help you map out your next steps. From determining what workloads should live where, to handling governance and compliance, to managing costs, our experts can help you optimize your operations.
https://www.hpe.com/services/consulting

HPE Managed Services

HPE runs your IT operations, providing services that monitor, operate, and optimize your infrastructure and applications, delivered consistently and globally to give you unified control and let you focus on innovation.
HPE Managed Services | HPE

Operational services

Optimize your entire IT environment and drive innovation. Manage day-to-day IT operational tasks while freeing up valuable time and resources. Meet service-level targets and business objectives with features designed to drive better business outcomes.
https://www.hpe.com/services/operational

HPE Complete Care Service

HPE Complete Care Service is a modular, edge-to-cloud IT environment service designed to help optimize your entire IT environment and achieve agreed upon IT outcomes and business goals through a personalized experience. All delivered by an assigned team of HPE Services experts. HPE Complete Care Service provides:

- A complete coverage approach -- edge to cloud
- An assigned HPE team
- Modular and fully personalized engagement
- Enhanced Incident Management experience with priority access
- Digitally enabled and AI driven customer experience

https://www.hpe.com/services/completecare

HPE Tech Care Service

HPE Tech Care Service is the operational support service experience for HPE products. The service goes beyond traditional support by providing access to product specific experts, an AI driven digital experience, and general technical guidance to not only reduce risk but constantly search for ways to do things better. HPE Tech Care Service delivers a customer-centric, AI driven, and digitally enabled customer experience to move your business forward. HPE Tech Care Service is available in three response levels. Basic, which provides 9x5 business hour availability and a 2-hour response time. Essential which provides a 15-minute response time 24x7 for most enterprise level customers, and Critical which includes a 6-hour repair commitment where available and outage management response for severity 1 incidents.
https://www.hpe.com/services/techcare

Service and Support

HPE Lifecycle Services

HPE Lifecycle Services provide a variety of options to help maintain your HPE systems and solutions at all stages of the product lifecycle. A few popular examples include:

- Lifecycle Install and Startup Services: Various levels for physical installation and power on, remote access setup, installation and startup, and enhanced installation services with the operating system.
- HPE Firmware Update Analysis Service: Recommendations for firmware revision levels for selected HPE products, taking into account the relevant revision dependencies within your IT environment.
- HPE Firmware Update Implementation Service: Implementation of firmware updates for selected HPE server, storage, and solution products, taking into account the relevant revision dependencies within your IT environment.
- Implementation assistance services: Highly trained technical service specialists to assist you with a variety of activities, ranging from design, implementation, and platform deployment to consolidation, migration, project management, and onsite technical forums.
- HPE Service Credits: Access to prepaid services for flexibility to choose from a variety of specialized service activities, including assessments, performance maintenance reviews, firmware management, professional services, and operational best practices.

Notes: To review the list of Lifecycle Services available for your product go to:
https://www.hpe.com/services/lifecycle

For a list of the most frequently purchased services using service credits, see the **HPE Service Credits Menu**

Other Related Services from HPE Services:

HPE Education Services

Training and certification designed for IT and business professionals across all industries. Broad catalogue of course offerings to expand skills and proficiencies in topics ranging from cloud and cybersecurity to AI and DevOps. Create learning paths to expand proficiency in a specific subject. Schedule training in a way that works best for your business with flexible continuous learning options.
https://www.hpe.com/services/training

Defective Media Retention

An option available with HPE Complete Care Service and HPE Tech Care Service and applies only to Disk or eligible SSD/Flash Drives replaced by HPE due to malfunction.

Consult your HPE Sales Representative or Authorized Channel Partner of choice for any additional questions and services options.

Parts and Materials

HPE will provide HPE-supported replacement parts and materials necessary to maintain the covered hardware product in operating condition, including parts and materials for available and recommended engineering improvements.

Parts and components that have reached their maximum supported lifetime and/or the maximum usage limitations as set forth in the manufacturer's operating manual, product quick-specs, or the technical product data sheet will not be provided, repaired, or replaced as part of these services.

How to Purchase Services

Services are sold by Hewlett Packard Enterprise and Hewlett Packard Enterprise Authorized Service Partners:

- Services for customers purchasing from HPE or an enterprise reseller are quoted using HPE order configuration tools.
- Customers purchasing from a commercial reseller can find services at **https://ssc.hpe.com/portal/site/ssc/**

Service and Support

AI Powered and Digitally Enabled Support Experience

Achieve faster time to resolution with access to product-specific resources and expertise through a digital and data driven customer experience

Sign into the HPE Support Center experience, featuring streamlined self-serve case creation and management capabilities with inline knowledge recommendations. You will also find personalized task alerts and powerful troubleshooting support through an intelligent virtual agent with seamless transition when needed to a live support agent.
https://support.hpe.com/hpesc/public/home/signin

Consume IT On Your Terms

HPE GreenLake edge-to-cloud platform brings the cloud experience directly to your apps and data wherever they are—the edge, colocations, or your data center. It delivers cloud services for on-premises IT infrastructure specifically tailored to your most demanding workloads. With a pay-per-use, scalable, point-and-click self-service experience that is managed for you, HPE GreenLake edge-to-cloud platform accelerates digital transformation in a distributed, edge-to-cloud world.

- Get faster time to market
- Save on TCO, align costs to business
- Scale quickly, meet unpredictable demand
- Simplify IT operations across your data centers and clouds

To learn more about HPE Services, please contact your Hewlett Packard Enterprise sales representative or Hewlett Packard Enterprise Authorized Channel Partner. Contact information for a representative in your area can be found at "Contact HPE"
https://www.hpe.com/us/en/contact-hpe.html

For more information
http://www.hpe.com/services

Configuration Information

This section lists some of the steps required to configure an HPE Apollo 4510 Gen10 system. To ensure only valid configurations are ordered, Hewlett Packard Enterprise recommends the use of an HPE approved configurator. Contact your local sales representative for information on configurable product offerings and requirements.

- All configurations must start with a CTO chassis.
- FIO indicates that this option is only available as a factory installable option.
- All Factory Integrated Models will be populated with sufficient hard drive blanks based on the number of initial hard drives ordered with the server.
- Some options may not be integrated at the factory. Contact your local sales representative for additional information.

Notes: Rack chosen is required to have 1075mm to provide space for cable management at the rear of the chassis and host PDU in the rear of the rack.

Step 1: Base Configuration / Chassis

HPE Apollo 4510 Gen10 Chassis

Description	SKU
HPE Apollo 4510 Gen10 Configure-to-Order Chassis	864668-B21

Notes:

- Requires one HPE ProLiant XL450 Gen10 server node (864625-B21).
- Standard 5 hot-plug fan modules included.

Step 1a: Select Required Server Node

HPE X450 Gen10 Server Node for Apollo 4510 Gen10

HPE ProLiant XL450 Gen10 Configure-to-order Server Node for Apollo 4510 Gen10 Chassis	864625-B21

Notes: Select quantity of one.

Step 1b: Select Required Chassis Options

Only one of the following from each category unless otherwise noted

HPE Power Supplies

Prior to making a power supply selection, please use the HPE Power Advisor to determine the right size power supply for your system configuration. The HPE Power Advisor is located at: **http://www.hpe.com/info/hppoweradvisor**

HPE Flex Slot Titanium Power Supply Kits

The following power supplies offer up to 96% efficiency.

HPE 800W Flex Slot Titanium Hot Plug Low Halogen Power Supply Kit	865438-B21

HPE Flex Slot Power Supplies

The following power supplies offer up to 94% efficiency.

HPE 1600W Flex Slot Platinum Hot Plug Low Halogen Power Supply Kit	830272-B21
HPE 800W Flex Slot Platinum Hot Plug Low Halogen Power Supply Kit	865414-B21
HPE 800W Flex Slot -48VDC Hot Plug Low Halogen Power Supply Kit	865434-B21
HPE 800W Flex Slot Universal Hot Plug Low Halogen Power Supply Kit	865428-B21

Notes:

- For 800W power supplies only: A minimum of three power supplies per chassis is required when two processors are selected.
- Kits contain power supply, an IEC power cable, and PDU IEC cables.

HPE Rail Kits

HPE 4U Server Rail Kit	878571-B21

Notes: One Rail Kit is required for every chassis in a rack.

Configuration Information

I/O Module

Notes: One I/O module is required

HPE Apollo 4500 Gen10 CPU0 x2/CPU1 x2 FIO I/O Module	882020-B21

Notes: HPE Apollo 4500 Gen10 CPU0 x2/CPU1 x2 FIO I/O Module (882020-B21) contains one FlexLOM and one x16 PCIe slot from Proc 1 and two x16 PCIe slots from Proc 2.

HPE Apollo 4500 Gen10 CPU0 x3/CPU1 x1 I/O Module	P00416-B21

Notes: HPE Apollo 4500 Gen10 CPU0 x3/CPU1 x1 I/O Module (P00416-B21) contains one FlexLOM and two x8 PCIe slot from Proc 1 and one x16 PCIe slots from Proc 2.

Step 2: Choose Required Server Node Options

HPE Processor Kits

First Processor

Up to two processors are supported. For two-processor configurations, first select one xxxxxx-L21 SKU here, and then later select the corresponding xxxxxx-B21 SKU (with the same the first six digits).

Notes:

- Mixing of different processor models is NOT allowed.
- DDR4 speed is the maximum memory speed of the processor. Actual memory speed may depend on the quantity and type of DIMMs installed.

Description	SKU
Gold 6200 series	
Intel Xeon-Gold 6252 (2.1GHz/24-core/150W) FIO Processor Kit for HPE ProLiant XL450 Gen10	P10772-L21
Intel Xeon-Gold 6248 (2.5GHz/20-core/150W) FIO Processor Kit for HPE ProLiant XL450 Gen10	P10771-L21
Intel Xeon-Gold 6242 (2.8GHz/16-core/150W) FIO Processor Kit for HPE ProLiant XL450 Gen10	P10769-L21
Intel Xeon-Gold 6240 (2.6GHz/18-core/150W) FIO Processor Kit for HPE ProLiant XL450 Gen10	P10768-L21
Intel Xeon-Gold 6234 (3.3GHz/8-core/130W) FIO Processor for HPE ProLiant XL450 Gen10	P12718-L21
Intel Xeon-Gold 6230R (2.1GHz/26-core/150W) FIO Processor Kit for HPE ProLiant XL450 Gen10	P24710-L21
Intel Xeon-Gold 6230 (2.1GHz/20-core/125W) FIO Processor Kit for HPE ProLiant XL450 Gen10	P10767-L21
Intel Xeon-Gold 6226R (2.9GHz/16-core/150W) FIO Processor Kit for HPE ProLiant XL450 Gen10	P24709-L21
Intel Xeon-Gold 6226 (2.7GHz/12-core/125W) FIO Processor Kit for HPE ProLiant XL450 Gen10	P12717-L21
Gold 5200 series	
Intel Xeon-Gold 5220R (2.2GHz/24-core/150W) FIO Processor Kit for HPE ProLiant XL450 Gen10	P19712-L21
Intel Xeon-Gold 5220 (2.2GHz/18-core/125W) FIO Processor Kit for HPE ProLiant XL450 Gen10	P10766-L21
Intel Xeon-Gold 5218R (2.1GHz/20-core/125W) FIO Processor Kit for HPE ProLiant XL450 Gen10	P24708-L21
Intel Xeon-Gold 5218 (2.3GHz/16-core/125W) FIO Processor Kit for HPE ProLiant XL450 Gen10	P10765-L21
Intel Xeon-Gold 5215 (2.5GHz/10-core/85W) FIO Processor Kit for HPE ProLiant XL450 Gen10	P12716-L21
Silver 4200 series	
Intel Xeon-Silver 4216 (2.1GHz/16-core/100W) FIO Processor Kit for HPE ProLiant XL450 Gen10	P12715-L21
Intel Xeon-Silver 4215R (3.2GHz/8-core/130W) FIO Processor Kit for HPE ProLiant XL450 Gen10	P24707-L21
Intel Xeon-Silver 4215 (2.5GHz/8-core/85W) FIO Processor Kit for HPE ProLiant XL450 Gen10	P12714-L21
Intel Xeon-Silver 4214R (2.4GHz/12-core/100W) FIO Processor Kit for HPE ProLiant XL450 Gen10	P19707-L21
Intel Xeon-Silver 4214 (2.2GHz/12-core/85W) FIO Processor Kit for HPE ProLiant XL450 Gen10	P12713-L21
Intel Xeon-Silver 4210R (2.4GHz/10-core/100W) FIO Processor Kit for HPE ProLiant XL450 Gen10	P19706-L21
Intel Xeon-Silver 4210 (2.2GHz/10-core/85W) FIO Processor Kit for HPE ProLiant XL450 Gen10	P12712-L21
Intel Xeon-Silver 4208 (2.1GHz/8-core/85W) FIO Processor Kit for HPE ProLiant XL450 Gen10	P12711-L21

Configuration Information

HPE Memory

For HPE Gen10 memory population rules and optimal memory performance guidelines, please go to:
https://www.hpe.com/docs/memory-population-rules.

For memory Reliability, Accessibility, Serviceability (RAS) features whitepaper like Gen10 Fast Fault Tolerance and legacy mirrored memory feature etc. please go to:
http://www.hpe.com/docs/memory-ras-feature.

Memory DIMM availability with a server platform is dependent upon completion of certification testing.
The maximum memory speed is a function of the memory type, memory configuration, and processor model.

Intel Xeon Gold 62xx processors that support 2933 MT/s DIMMs will do so only at 1 DIMM per channel. Configuring 2 DIMMs per channel will drop memory speed back to 2666 MT/s. For more information, please go to:
https://www.hpe.com/docs/memory-speed-table

Notes: Maximum memory capacity is 1024GB per processor/socket.

Description	SKU
DDR4-2933 DIMMs	
HPE 8GB (1x8GB) Single Rank x8 DDR4-2933 CAS-21-21-21 Registered Smart Memory Kit	P00918-K21
HPE 16GB (1x16GB) Single Rank x4 DDR4-2933 CAS-21-21-21 Registered Smart Memory Kit	P00920-K21
HPE 16GB (1x16GB) Dual Rank x8 DDR4-2933 CAS-21-21-21 Registered Smart Memory Kit	P00922-K21
HPE 32GB (1x32GB) Dual Rank x4 DDR4-2933 CAS-21-21-21 Registered Smart Memory Kit	P00924-K21
HPE 64GB (1x64GB) Dual Rank x4 DDR4-2933 CAS-21-21-21 Registered Smart Memory Kit	P00930-K21
DDR4-2666 DIMMs	
HPE 16GB (1x16GB) Dual Rank x8 DDR4-2666 CAS-19-19-19 Registered Smart Memory Kit	835955-K21
HPE 32GB (1x32GB) Dual Rank x4 DDR4-2666 CAS-19-19-19 Registered Smart Memory Kit	815100-K21

Core Options

Step 3: Choose Additional Options

Some options may not be integrated at the factory. To ensure only valid configurations are ordered, Hewlett Packard Enterprise recommends the use of a Hewlett Packard Enterprise approved configurator. Contact your local sales representative for additional information.

HPE Processor Kits

Second Processor

Up to two processors are supported. For two-processor configurations, the first six digits in the xxxxxx-B21 SKU below should match those in the corresponding xxxxxx-L21 SKU chosen above.

Notes:

- Mixing of different processor models is NOT allowed.
- DDR4 speed is the maximum memory speed of the processor. Actual memory speed may depend on the quantity and type of DIMMs installed.

Description	SKU
Gold 6200 series	
Intel Xeon-Gold 6252 (2.1GHz/24-core/150W) Processor Kit for HPE ProLiant XL450 Gen10	P10772-B21
Intel Xeon-Gold 6248 (2.5GHz/20-core/150W) Processor Kit for HPE ProLiant XL450 Gen10	P10771-B21
Intel Xeon-Gold 6242 (2.8GHz/16-core/150W) Processor Kit for HPE ProLiant XL450 Gen10	P10769-B21
Intel Xeon-Gold 6240 (2.6GHz/18-core/150W) Processor Kit for HPE ProLiant XL450 Gen10	P10768-B21
Intel Xeon-Gold 6234 (3.3GHz/8-core/130W) Processor Kit for HPE ProLiant XL450 Gen10	P12718-B21
Intel Xeon-Gold 6230R (2.1GHz/26-core/150W) Processor Kit for HPE ProLiant XL450 Gen10	P24710-B21
Intel Xeon-Gold 6230 (2.1GHz/20-core/125W) Processor Kit for HPE ProLiant XL450 Gen10	P10767-B21
Intel Xeon-Gold 6226R (2.9GHz/16-core/150W) Processor Kit for HPE ProLiant XL450 Gen10	P24709-B21
Intel Xeon-Gold 6226 (2.7GHz/12-core/125W) Processor Kit for HPE ProLiant XL450 Gen10	P12717-B21
Gold 5200 series	
Intel Xeon-Gold 5220R (2.2GHz/24-core/150W) Processor Kit for HPE ProLiant XL450 Gen10	P19712-B21
Intel Xeon-Gold 5220 (2.2GHz/18-core/125W) Processor Kit for HPE ProLiant XL450 Gen10	P10766-B21
Intel Xeon-Gold 5218R (2.1GHz/20-core/125W) Processor Kit for HPE ProLiant XL450 Gen10	P24708-B21
Intel Xeon-Gold 5218 (2.3GHz/16-core/125W) Processor Kit for HPE ProLiant XL450 Gen10	P10765-B21
Intel Xeon-Gold 5215 (2.5GHz/10-core/85W) Processor Kit for HPE ProLiant XL450 Gen10	P12716-B21
Silver 4200 series	
Intel Xeon-Silver 4216 (2.1GHz/16-core/100W) Processor Kit for HPE ProLiant XL450 Gen10	P12715-B21
Intel Xeon-Silver 4215R (3.2GHz/8-core/130W) Processor Kit for HPE ProLiant XL450 Gen10	P24707-B21
Intel Xeon-Silver 4215 (2.5GHz/8-core/85W) Processor Kit for HPE ProLiant XL450 Gen10	P12714-B21
Intel Xeon-Silver 4214R (2.4GHz/12-core/100W) Processor Kit for HPE ProLiant XL450 Gen10	P19707-B21
Intel Xeon-Silver 4214 (2.2GHz/12-core/85W) Processor Kit for HPE ProLiant XL450 Gen10	P12713-B21
Intel Xeon-Silver 4210R (2.4GHz/10-core/100W) Processor Kit for HPE ProLiant XL450 Gen10	P19706-B21
Intel Xeon-Silver 4210 (2.2GHz/10-core/85W) Processor Kit for HPE ProLiant XL450 Gen10	P12712-B21
Intel Xeon-Silver 4208 (2.1GHz/8-core/85W) Processor Kit for HPE ProLiant XL450 Gen10	P12711-B21

Core Options

HPE Memory

Additional Memory Kit(s)

For HPE Gen10 memory population rules and optimal memory performance guidelines, please go to: **https://www.hpe.com/docs/memory-population-rules**.

For memory Reliability, Accessibility, Serviceability (RAS) features whitepaper like Gen10 Fast Fault Tolerance and legacy mirrored memory feature etc. please go to: **http://www.hpe.com/docs/memory-ras-feature**.

Memory DIMM availability with a server platform is dependent upon completion of certification testing.
The maximum memory speed is a function of the memory type, memory configuration, and processor model.

Intel Xeon Gold 62xx processors that support 2933 MT/s DIMMs will do so only at 1 DIMM per channel. Configuring 2 DIMMs per channel will drop memory speed back to 2666 MT/s. For more information, please go to:
https://www.hpe.com/docs/memory-speed-table

Notes: Maximum memory capacity is 1024GB per processor/socket.

Description	SKU
DDR4-2933 DIMMs	
HPE 8GB (1x8GB) Single Rank x8 DDR4-2933 CAS-21-21-21 Registered Smart Memory Kit	P00918-K21
HPE 16GB (1x16GB) Single Rank x4 DDR4-2933 CAS-21-21-21 Registered Smart Memory Kit	P00920-K21
HPE 16GB (1x16GB) Dual Rank x8 DDR4-2933 CAS-21-21-21 Registered Smart Memory Kit	P00922-K21
HPE 32GB (1x32GB) Dual Rank x4 DDR4-2933 CAS-21-21-21 Registered Smart Memory Kit	P00924-K21
HPE 64GB (1x64GB) Dual Rank x4 DDR4-2933 CAS-21-21-21 Registered Smart Memory Kit	P00930-K21
DDR4-2666 DIMMs	
HPE 16GB (1x16GB) Dual Rank x8 DDR4-2666 CAS-19-19-19 Registered Smart Memory Kit	835955-K21
HPE 32GB (1x32GB) Dual Rank x4 DDR4-2666 CAS-19-19-19 Registered Smart Memory Kit	815100-K21
HPE Persistent Memory (Intel Optane)	
Intel Optane 128GB persistent memory 100 Series for HPE	835804-B21
Intel Optane 256GB persistent memory 100 Series for HPE	835807-B21
Intel Optane 512GB persistent memory 100 Series for HPE	835810-B21

Notes:

- A maximum 512GB per processor/socket HPE Persistent Memory DIMMs supported with select 2nd-Generation Intel Xeon Scalable Series Processors ONLY (62xx/52xx/4215) and can only be mixed with either RDIMMs or LRDIMMs.
- HPE Persistent Memory (Intel Optane) is available for factory-install only.
- For more information regarding HPE Persistent Memory visit: **http://www.hpe.com/info/persistentmemory**

BIOS Mode (Factory Setting)

HPE Legacy FIO Mode Setting	758959-B22

Notes: Selecting this option will change the default UEFI BIOS setting into Legacy BIOS setting.

Core Options

HPE NS204i-p OS Boot Device

The HPE NS204i-p OS Boot Device is a PCIe add-in card that enables dedicated RAID1 operating system mirroring on the two included 480GB M.2 NVMe SSDs. It presents itself to the system as a single direct-connect NVMe drive (not a RAID controller) and it is "plug-and-play," with no need for device configuration or management.

Description	SKU
HPE NS204i-p x2 Lanes NVMe PCIe3 x8 OS Boot Device	P12965-B21

HPE Smart Array Controllers

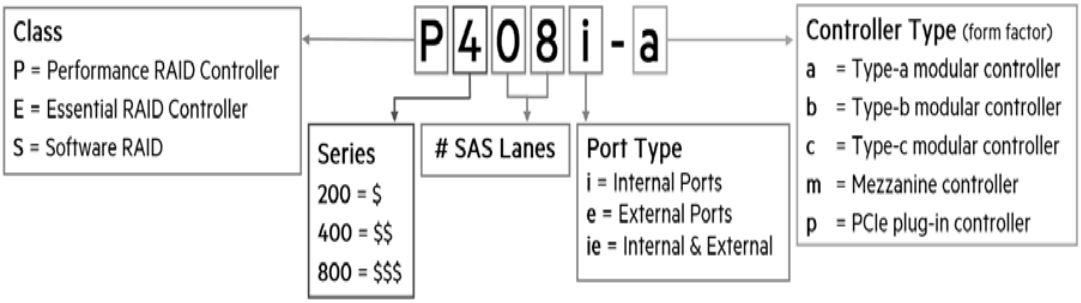

Storage Controllers for XL450 Gen10 Server Node SFF Drives

The XL450 Gen10 Server Node has two hot-plug small form factor (SFF) drive bays that support SAS, SATA, or NVMe drives.

HPE Smart Array S100i SR Gen10 SW RAID is included standard (UEFI mode only).

Notes:

- HPE Smart Array E208i-a SR Gen10 or P408i-a SR Gen10 controllers support (up to) 12G SAS or 6G SATA hardware RAID/HBA functionality and do not occupy a PCIe expansion slot.
- If SFF SAS drives are selected, one HPE Smart Array E208i-a SR Gen10 or P408i-a SR Gen10 controller is required.
- If SFF NVMe SSDs are selected, an HPE Smart Array controller is not supported/required.
- All performance RAID controllers require purchase of one HPE Smart Storage Battery (P01366-B21) per chassis.

HPE Smart Array P408i-a SR Gen10 (8 Internal Lanes/2GB Cache) 12G SAS Modular Controller	804331-B21
HPE Smart Array E208i-a SR Gen10 (8 Internal Lanes/No Cache) 12G SAS Modular Controller	804326-B21

Storage Controllers for LFF Bulk Drives

Up to 60 hot-plug large form factor (LFF) SAS or SATA drives can be loaded in two front-access drive drawers (30 drives each). A single controller can address all drives or two controllers can each be assigned to a drawer to optimize performance.

Notes:

- A minimum of one and maximum of two of the following controllers is required to add LFF drives.
- All performance RAID controllers require purchase of one HPE Smart Storage Battery (P01366-B21) per chassis.

HPE Smart Array P408i-p SR Gen10 (8 Internal Lanes/2GB Cache) 12G SAS PCIe Plug-in Controller	830824-B21
HPE Smart Array E208i-p SR Gen10 (8 Internal Lanes/No Cache) 12G SAS PCIe Plug-in Controller	804394-B21

Storage Controllers for External Drives

Notes: All performance RAID controllers require purchase of one HPE Smart Storage Battery (P01366-B21) per chassis.

HPE Smart Array P408e-p SR Gen10 (8 External Lanes/4GB Cache) 12G SAS PCIe Plug-in Controller	804405-B21
HPE Smart Array E208e-p SR Gen10 (8 External Lanes/No Cache) 12G SAS PCIe Plug-in Controller	804398-B21

Core Options

Description	SKU
Storage Controller Cable Options	
HPE Apollo 4500 Gen10 Smart Array E208i-a/P408i-a SAS Cable Kit	874779-B21
Notes: 874779-B21 is required if an HPE Smart Array Controller (E208i-a SR Gen10 or P408i-a SR Gen10) for the ProLiant XL450 Gen10 Server Node SFF drives is selected.	
HPE Apollo 4500 Gen10 Smart Array E208i-p/P408i-p SAS Cable Kit	874777-B21
Notes: 874777-B21 is required if one HPE Smart Array Controller (E208i-p SR Gen10 or P408i-p SR Gen10) for LFF bulk drives is selected:	
HPE Apollo 4500 Gen10 Dual Smart Array E208i-p/P408i-p SAS Cable Kit	874778-B21
Notes: 874778-B21 is required if a second HPE Smart Array Controller (E208i-p SR Gen10 or P408i-p SR Gen10) for LFF bulk drives is selected.	
Smart Array Optional Software	
HPE Smart Array SR Secure Encryption (Data at Rest Encryption/per Server Entitlement) E-LTU	Q2F26AAE
Notes: SmartCache is offered for HPE Smart Array performance RAID controllers.	
Controller State (Factory Setting)	
HPE FIO Enable Smart Array SW RAID	784308-B21
Notes: This option may be selected to support RAID and Hot-plug capabilities for SATA hard drives. HPE Smart Array S100i SR Gen10 Software RAID does not support SAS hard drives, and it supports Microsoft Windows only.	

HPE Drives

To streamline the configuration process for HPE ProLiant and Apollo Gen10 systems and to provide the best product availability, HPE recommends options highlighted here: **http://www.hpe.com/products/recommend**

HDD Selections

LFF Drives for 60-bay Bulk Storage Drawers:

Mission Critical (Enterprise) - 12G SAS

Business Critical (Midline) - 12G SAS

HPE 2TB SAS 12G Business Critical 7.2K LFF LP 1-year Warranty Multi Vendor HDD	833926-K21
HPE 4TB SAS 12G Business Critical 7.2K LFF LP 1-year Warranty Multi Vendor HDD	833928-K21
HPE 6TB SAS 12G Business Critical 7.2K LFF LP 1-year Warranty 512e Multi Vendor HDD	861746-K21
HPE 8TB SAS 12G Business Critical 7.2K LFF LP 1-year Warranty 512e Multi Vendor HDD	834031-K21
HPE 10TB SAS 12G Business Critical 7.2K LFF LP 1-year Warranty 512e ISE Multi Vendor HDD	P53556-K21
HPE 12TB SAS 12G Business Critical 7.2K LFF LP 1-year Warranty Helium 512e Multi Vendor HDD	881781-K21
HPE 14TB SAS 12G Business Critical 7.2K LFF LP 1-year Warranty Helium 512e Multi Vendor HDD	P09155-K21
HPE 16TB SAS 12G Business Critical 7.2K LFF LP 1-year Warranty Helium 512e ISE Multi Vendor HDD	P23608-K21
HPE 18TB SAS 12G Business Critical 7.2K LFF LP 1-year Warranty Helium 512e ISE Multi Vendor HDD	P37669-K21
HPE 20TB SAS 12G Business Critical 7.2K LFF LP 1-year Warranty Helium 512e ISE Multi Vendor HDD	P53553-K21

Core Options

Business Critical (Midline) - 6G SATA

Description	SKU
HPE 1TB SATA 6G Business Critical 7.2K LFF LP 1-year Warranty Multi Vendor HDD	861686-K21
HPE 4TB SATA 6G Business Critical 7.2K LFF LP 1-year Warranty Multi Vendor HDD	861683-K21
HPE 6TB SATA 6G Business Critical 7.2K LFF LP 1-year Warranty 512e Multi Vendor HDD	861742-K21
HPE 8TB SATA 6G Business Critical 7.2K LFF LP 1-year Warranty 512e Multi Vendor HDD	834028-K21
HPE 10TB SATA 6G Business Critical 7.2K LFF LP 1-year Warranty 512e ISE Multi Vendor HDD	P53557-K21
HPE 12TB SATA 6G Business Critical 7.2K LFF LP 1-year Warranty Helium 512e Multi Vendor HDD	881787-K21
HPE 14TB SATA 6G Business Critical 7.2K LFF LP 1-year Warranty Helium 512e Multi Vendor HDD	P09165-K21
HPE 16TB SATA 6G Business Critical 7.2K LFF LP 1-year Warranty Helium 512e ISE Multi Vendor HDD	P23449-K21
HPE 18TB SATA 6G Business Critical 7.2K LFF LP 1-year Warranty Helium 512e ISE Multi Vendor HDD	P37678-K21
HPE 20TB SATA 6G Business Critical 7.2K LFF LP 1-year Warranty Helium 512e ISE Multi Vendor HDD	P53554-K21

The following HPE Hard Drive bundles are Factory Integration Only options. They must be purchased at time of configuration and are not available for field integration.

SFF Drives for XL450 Gen10 Server Node:

Mission Critical (Enterprise) - 12G SAS

HPE 300GB SAS 12G Mission Critical 15K SFF SC 3-year Warranty Multi Vendor HDD	870753-K21
HPE 300GB SAS 12G Mission Critical 10K SFF SC 3-year Warranty Multi Vendor HDD	872475-K21
HPE 600GB SAS 12G Mission Critical 15K SFF SC 3-year Warranty Multi Vendor HDD	870757-K21
HPE 600GB SAS 12G Mission Critical 10K SFF SC 3-year Warranty Multi Vendor HDD	872477-K21
HPE 900GB SAS 12G Mission Critical 15K SFF SC 3-year Warranty Multi Vendor HDD	870759-K21
HPE 1.2TB SAS 12G Mission Critical 10K SFF SC 3-year Warranty Multi Vendor HDD	872479-K21
HPE 1.8TB SAS 12G Mission Critical 10K SFF SC 3-year Warranty 512e Multi Vendor HDD	872481-K21
HPE 2.4TB SAS 12G Mission Critical 10K SFF SC 3-year Warranty 512e Multi Vendor HDD	881457-K21

Business Critical (Midline) - 12G SAS

HPE 1TB SAS 12G Business Critical 7.2K SFF SC 1-year Warranty HDD	832514-K21
HPE 2TB SAS 12G Business Critical 7.2K SFF SC 1-year Warranty 512e HDD	765466-K21

Business Critical (Midline) - 6G SATA

HPE 1TB SATA 6G Business Critical 7.2K SFF SC 1-year Warranty HDD	655710-K21
HPE 2TB SATA 6G Business Critical 7.2K SFF SC 1-year Warranty 512e HDD	765455-K21

SSD Selections

To further assist with configuration, HPE also offers an SSD Selector Tool located here: **http://ssd.hpe.com**.

LFF SSDs for 60-bay Bulk Storage Drawers:

Mixed Use - 12G SAS

HPE 960GB SAS 12G Mixed Use LFF LPC Value SAS Multi Vendor SSD	P37009-K21

Read Intensive - 12G SAS

HPE 7.68TB SAS 24G Read Intensive LFF LPC Multi Vendor SSD	P49040-K21
HPE 7.68TB SAS 24G Read Intensive LFF LPC Multi Vendor SSD	P49040-K21
HPE 7.68TB SATA 6G Very Read Optimized LFF LPC 5400 SSD	P58232-K21

Core Options

Read Intensive - 6G SATA LFF

Description	SKU
HPE 960GB SATA 6G Read Intensive LFF LPC Multi Vendor SSD	P47808-K21
HPE 960GB SATA 6G Read Intensive LFF LPC Multi Vendor SSD	P47808-K21

SFF SSDs for XL450 Gen10 Server Node:

HPE has qualified the NVMe drive portfolio using the Operating System inbox drivers, full detail on the **HPE Solid State Drive QuickSpecs**

Mixed Use - NVMe

HPE 3.2TB NVMe Gen4 High Performance Mixed Use SFF SC U.3 CM6 SSD	P20088-K21
HPE 1.6TB NVMe Gen4 High Performance Mixed Use SFF SCN U.3 PM1735a SSD	P50225-K21
HPE 3.2TB NVMe Gen4 High Performance Mixed Use SFF SCN U.3 PM1735a SSD	P50228-K21
HPE 6.4TB NVMe Gen4 High Performance Mixed Use SFF SCN U.3 PM1735a SSD	P50231-K21
HPE 1.6TB NVMe Gen4 High Performance Mixed Use SFF SCN U.2 P5620 SSD	P51458-K21
HPE 3.2TB NVMe Gen4 High Performance Mixed Use SFF SCN U.2 P5620 SSD	P51460-K21
HPE 6.4TB NVMe Gen4 High Performance Mixed Use SFF SCN U.2 P5620 SSD	P51462-K21
HPE 1.6TB NVMe Gen4 Mainstream Performance Mixed Use SFF SCN U.2 V2 Multi Vendor SSD	P64870-K21
HPE 3.2TB NVMe Gen4 Mainstream Performance Mixed Use SFF SCN U.2 V2 Multi Vendor SSD	P64878-K21
HPE 6.4TB NVMe Gen4 Mainstream Performance Mixed Use SFF SCN U.2 V2 Multi Vendor SSD	P64886-K21

Mixed Use – NVMe FIPS

HPE 1.6TB NVMe Gen4 High Performance Mixed Use SFF SCN Self-encrypting FIPS U.3 CM6 SSD	P44588-K21
HPE 3.2TB NVMe Gen4 High Performance Mixed Use SFF SCN Self-encrypting FIPS U.3 CM6 SSD	P44596-K21

Mixed Use - 12G SAS

HPE 800GB SAS 12G Mixed Use SFF SC Multi Vendor SSD	P49046-K21
HPE 960GB SAS 12G Mixed Use SFF SC Value SAS Multi Vendor SSD	P37005-K21
HPE 1.6TB SAS 12G Mixed Use SFF SC Multi Vendor SSD	P49048-K21
HPE 1.92TB SAS 12G Mixed Use SFF SC Value SAS Multi Vendor SSD	P37011-K21
HPE 3.2TB SAS 12G Mixed Use SFF SC Multi Vendor SSD	P49052-K21
HPE 3.84TB SAS 12G Mixed Use SFF SC Value SAS Multi Vendor SSD	P37017-K21
HPE 6.4TB SAS 12G Mixed Use SFF SC Multi Vendor SSD	P49056-K21
HPE 800GB SAS 12G Mixed Use SFF SC Multi Vendor SSD	P49046-K21
HPE 1.6TB SAS 12G Mixed Use SFF SC Multi Vendor SSD	P49048-K21
HPE 3.2TB SAS 12G Mixed Use SFF SC Multi Vendor SSD	P49052-K21
HPE 6.4TB SAS 12G Mixed Use SFF SC Multi Vendor SSD	P49056-K21

Mixed Use - 6G SATA

HPE 480GB SATA 6G Mixed Use SFF SC Multi Vendor SSD	P18432-K21
HPE 480GB SATA 6G Mixed Use SFF SC PM897 SSD	P47814-K21
HPE 960GB SATA 6G Mixed Use SFF SC Multi Vendor SSD	P18434-K21
HPE 960GB SATA 6G Mixed Use SFF SC PM897 SSD	P47815-K21
HPE 1.92TB SATA 6G Mixed Use SFF SC Multi Vendor SSD	P18436-K21
HPE 1.92TB SATA 6G Mixed Use SFF SC PM897 SSD	P47816-K21
HPE 3.84TB SATA 6G Mixed Use SFF SC Multi Vendor SSD	P18438-K21
HPE 480GB SATA 6G Mixed Use SFF SC PM897 SSD	P47814-K21
HPE 960GB SATA 6G Mixed Use SFF SC PM897 SSD	P47815-K21
HPE 1.92TB SATA 6G Mixed Use SFF SC PM897 SSD	P47816-K21

Core Options

Read Intensive - NVMe	
HPE 1.92TB NVMe Gen4 High Performance Read Intensive SFF SCN U.3 PM1733a SSD	P50214-K21
HPE 3.84TB NVMe Gen4 High Performance Read Intensive SFF SCN U.3 PM1733a SSD	P50217-K21
HPE 7.68TB NVMe Gen4 High Performance Read Intensive SFF SCN U.3 PM1733a SSD	P50220-K21
HPE 1.92TB NVMe Gen4 High Performance Read Intensive SFF SCN U.2 P5520 SSD	P51452-K21
HPE 3.84TB NVMe Gen4 High Performance Read Intensive SFF SCN U.2 P5520 SSD	P51454-K21
HPE 7.68TB NVMe Gen4 High Performance Read Intensive SFF SCN U.2 P5520 SSD	P51456-K21
HPE 1.92TB NVMe Gen4 Mainstream Performance Read Intensive SFF SCN U.2 V2 Multi Vendor SSD	P64874-K21
HPE 3.84TB NVMe Gen4 Mainstream Performance Read Intensive SFF SCN U.2 V2 Multi Vendor SSD	P64882-K21
HPE 7.68TB NVMe Gen4 Mainstream Performance Read Intensive SFF SCN U.2 V2 Multi Vendor SSD	P64890-K21
Read Intensive – NVMe FIPS	
HPE 1.92TB NVMe Gen4 High Performance Read Intensive SFF SCN Self-encrypting FIPS U.3 CM6 SSD	P44572-K21
HPE 3.84TB NVMe Gen4 High Performance Read Intensive SFF SCN Self-encrypting FIPS U.3 CM6 SSD	P44580-K21
Read Intensive - 12G SAS	
HPE 960GB SAS 12G Read Intensive SFF SC Value SAS Multi Vendor SSD	P36997-K21
HPE 960GB SAS 12G Read Intensive SFF SC Multi Vendor SSD	P49028-K21
HPE 1.92TB SAS 12G Read Intensive SFF SC Value SAS Multi Vendor SSD	P36999-K21
HPE 1.92TB SAS 12G Read Intensive SFF SC Multi Vendor SSD	P49030-K21
HPE 3.84TB SAS 12G Read Intensive SFF SC Value SAS Multi Vendor SSD	P37001-K21
HPE 3.84TB SAS 12G Read Intensive SFF SC Multi Vendor SSD	P49034-K21
HPE 7.68TB SAS 12G Read Intensive SFF SC Value SAS Multi Vendor SSD	P37003-K21
HPE 7.68TB SAS 12G Read Intensive SFF SC Multi Vendor SSD	P49039-K21
HPE 15.36TB SAS 12G Read Intensive SFF SC Multi Vendor SSD	P49044-K21
Read Intensive - 6G SATA SFF	
HPE 240GB SATA 6G Read Intensive SFF SC Multi Vendor SSD	P18420-K21
HPE 480GB SATA 6G Read Intensive SFF SC Multi Vendor SSD	P18422-K21
HPE 480GB SATA 6G Read Intensive SFF SC PM893 SSD	P47810-K21
HPE 960GB SATA 6G Read Intensive SFF SC Multi Vendor SSD	P18424-K21
HPE 960GB SATA 6G Read Intensive SFF SC PM893 SSD	P47811-K21
HPE 1.92TB SATA 6G Read Intensive SFF SC Multi Vendor SSD	P18426-K21
HPE 1.9TB SATA 6G Read Intensive SFF SC PM893 SSD	P47812-K21
HPE 3.84TB SATA 6G Read Intensive SFF SC Multi Vendor SSD	P18428-K21
HPE 3.84TB SATA 6G Read Intensive SFF SC PM893 SSD	P47813-K21
HPE 7.68TB SATA 6G Read Intensive SFF SC Multi Vendor SSD	P18430-K21
HPE 480GB SATA 6G Read Intensive SFF SC PM893 SSD	P47810-K21
HPE 960GB SATA 6G Read Intensive SFF SC PM893 SSD	P47811-K21
HPE 1.9TB SATA 6G Read Intensive SFF SC PM893 SSD	P47812-K21
HPE 3.84TB SATA 6G Read Intensive SFF SC PM893 SSD	P47813-K21

HPE M.2 Enablement Kits for XL450 Gen10 Server Node SFF slots

HPE M.2 Enablement Kits are Small Form Factor (SFF) Flash Adapters that package two 6G SATA M.2 Micro Form Factor (uFF) Sleds in a Dual-Domain SFF Smart Drive bay.

Core Options

M.2 Drives for XL450 Gen10 Server Node Riser Board:

Read Intensive - NVMe

HPE 480GB NVMe Gen3 Mainstream Performance Read Intensive M.2 Multi Vendor SSD	P40513-K21
HPE 960GB NVMe Gen3 Mainstream Performance Read Intensive M.2 Multi Vendor SSD	P40514-K21
HPE 1.92TB NVMe Gen3 Mainstream Performance Read Intensive M.2 Multi Vendor SSD	P40515-K21
HPE 480GB NVMe Gen4 Mainstream Performance Read Intensive M.2 PM9A3 SSD	P69543-K21

HPE Networking

Notes: The Apollo 4510 Gen10 ships with 2x 1 Gb Ethernet ports embedded.

Description	SKU
PCIe Adapters	
1 Gigabit Ethernet	
HPE Ethernet 1Gb 4-port BASE-T BCM5719 Adapter	647594-B21
HPE Ethernet 1Gb 2-port BASE-T BCM5720 Adapter	615732-B21
HPE Ethernet 1Gb 4-port BASE-T I350-T4V2 Adapter	811546-B21
10 Gigabit Ethernet	
HPE Ethernet 10Gb 2-port BASE-T BCM57416 Adapter	813661-B21
HPE Ethernet 10Gb 2-port SFP+ X710-DA2 Adapter	727055-B21
HPE Ethernet 10Gb 2-port BASE-T X550-AT2 Adapter	817738-B21
25 Gigabit Ethernet	
HPE Ethernet 10/25Gb 2-port SFP28 MCX4121A-ACUT Adapter	817753-B21
Mellanox MCX512F-ACHT Ethernet 10/25Gb 2-port SFP28 Adapter for HPE	P13188-B21
100 Gigabit Ethernet	
HPE Ethernet 100Gb 1-port QSFP28 MCX515A-CCAT Adapter	874253-B21
HPE InfiniBand	
Description	**SKU**
HPE InfiniBand EDR/Ethernet 100Gb 2-port 841QSFP28 Adapter	872726-H21
HPE InfiniBand HDR100/Ethernet 100Gb 1-port QSFP56 PCIe3 x16 MCX653105A-ECAT Adapter	P06250-H21
HPE InfiniBand HDR100/Ethernet 100Gb 2-port QSFP56 PCIe3 x16 MCX653106A-ECAT Adapter	P06251-H21
HPE Intel® Omni-Path Options	
HPE 100Gb 1-port OP101 QSFP28 x16 PCIe Gen3 with Intel Omni-Path Architecture Adapter	829335-B21

Notes:

- Total number of PCIe slots available is 3 with 2 processors. This is the total selection from any combination of PCIe options in the following categories: Infiniband, Networking, Controllers, and PCIe Accelerators.
- A minimum of two Gigabytes (2 GB) of server memory is required per each adapter.

Direct Attach Cable (DAC) for copper environments or fiber transceivers and cables for fiber-optic environments must be purchased separately..

FlexibleLOM Adapters

1 Gigabit Ethernet

HPE Ethernet 1Gb 4-port FLR-T BCM5719 Adapter	629135-B22
HPE Ethernet 1Gb 4-port FLR-T I350-T4V2 Adapter	665240-B21

Core Options

10 Gigabit Ethernet	
HPE Ethernet 10Gb 2-port FLR-T BCM57416 Adapter	817721-B21
HPE Ethernet 10Gb 2-port FLR-SFP+ X710-DA2 Adapter	727054-B21
HPE Ethernet 10Gb 2-port FLR-T X550-AT2 Adapter	817745-B21
25 Gigabit Ethernet	
HPE Ethernet 10/25Gb 2-port FLR-SFP28 BCM57414 Adapter	817709-B21
HPE Ethernet 10/25Gb 2-port FLR-SFP28 MCX4121A-ACFT Adapter	817749-B21
HPE InfiniBand	
HPE InfiniBand FDR/Ethernet 40/50Gb 2-port 547FLR-QSFP Adapter	879482-B21

Notes: FlexibleLOM adapters do not consume a PCIe slot. The total number of FlexibleLOM slots available is 1.

Pensando Distributed Services Platform (DSP)

Requirements

- One 3yr/4yr/5yr Silver or 3yr/4yr/5yr Platinum license must be purchased for every DSC-25 card in a server.
- 1yr Silver, 1yr Platinum, and 1yr Policy and Services Manager (PSM) licenses are reserved for renewals only.
- One Policy and Services Manager (PSM) license is required to manage up to 3,000 DSC-25 cards.

Distributed Services Card (DSC)

Pensando Distributed Services Platform DSC-25 Enterprise 10/25Gb 2-port SFP28 Card	P26966-B21

HPE Storage Adapters

Emulex Fibre Channel HBAs

Description	SKU
HPE SN1200E 16Gb Single Port Fibre Channel Host Bus Adapter	Q0L13A
HPE SN1200E 16Gb Dual Port Fibre Channel Host Bus Adapter	Q0L14A
HPE SN1600E 32Gb Single Port Fibre Channel Host Bus Adapter	Q0L11A
HPE SN1600E 32Gb Dual Port Fibre Channel Host Bus Adapter	Q0L12A
HPE SN1610E 32Gb 1-port Fibre Channel Host Bus Adapter	R2J62A
HPE SN1610E 32Gb 2-port Fibre Channel Host Bus Adapter	R2J63A
QLogic Fibre Channel HBAs	
HPE SN1100Q 16Gb Single Port Fibre Channel Host Bus Adapter	P9D93A
HPE SN1100Q 16Gb Dual Port Fibre Channel Host Bus Adapter	P9D94A
HPE SN1600Q 32Gb Single Port Fibre Channel Host Bus Adapter	P9M75A
HPE SN1600Q 32Gb Dual Port Fibre Channel Host Bus Adapter	P9M76A
HPE SN1610Q 32Gb 1-port Fibre Channel Host Bus Adapter	R2E08A
HPE SN1610Q 32Gb 2-port Fibre Channel Host Bus Adapter	R2E09A
Converged Network Adapters	
HPE CN1200R 10GBASE-T Converged Network Adapter	Q0F26A
HPE CN1300R 10/25Gb Dual Port Converged Network Adapter	Q0F09A

HPE Power Supplies

Prior to making a power supply selection it is highly recommended that the HPE Power Advisor is run to determine the right size power supply for your server configuration. The HPE Power Advisor is located at: **HPE Power Advisor Tool**.
For information on power specifications and technical content visit: **HPE Server power supplies**.

Core Options

HPE Flexible Slot Titanium Power Supply Kits

Notes: The following power supplies offer up to 96% efficiency.

HPE 800W Flex Slot Titanium Hot Plug Low Halogen Power Supply Kit	865438-B21

HPE Flexible Slot Power Supplies

Notes: The following power supplies offer up to 94% efficiency.

HPE 1600W Flex Slot Platinum Hot Plug Low Halogen Power Supply Kit	830272-B21
HPE 800W Flex Slot Platinum Hot Plug Low Halogen Power Supply Kit	865414-B21
HPE 800W Flex Slot -48VDC Hot Plug Low Halogen Power Supply Kit	865434-B21
HPE 800W Flex Slot Universal Hot Plug Low Halogen Power Supply Kit	865428-B21

Notes:

- For 800W power supplies only: A minimum of three power supplies per chassis is required when two processors are selected.
- Kits contain power supply, an IEC power cable, and PDU IEC cables.
- HPE 800W Flex Slot Universal Hot Plug Low Halogen Power Supply Kit
- For 800W power supplies only: A minimum of three power supplies per chassis is required when two processors are selected.
- Kits contain power supply, an IEC power cable, and PDU IEC cables.

Additional Options

HPE Apollo Platform Manager

The Apollo Platform Manager is an optional rack level solution for the HPE Apollo 4510 Gen10 Systems which enable server-level DC (or hardware) power on and off and server-level monitoring. In addition, the APM will automatically discover hardware components which are connected into the APM solution.

The APM does not replace rack PDUs, but is designed to enable the utilization of basic, low cost, rack PDUs while providing the functionality of 'switched' PDUs (which provide hardware power on/off of individual servers by turning off the AC power to the power supplies of a given server). Because the servers share power supplies to optimize power efficiency, using 'switched' PDUs to turn off all the power supplies in the chassis will result in the loss of all server nodes in that chassis. The APM solves this by allowing server node-level hardware power on/off of the DC power to the individual server node motherboards.

Description	SKU
HPE Apollo Platform Manager Kit	741192-B21

Embedded Management

HPE Integrated Lights-Out (iLO) Advanced

HPE iLO Advanced Electronic License with 1yr Support on iLO Licensed Features	E6U59ABE
HPE iLO Advanced Electronic License with 3yr Support on iLO Licensed Features	E6U64ABE
HPE iLO Advanced 1-server License with 1yr Support on iLO Licensed Features	512485-B21
HPE iLO Advanced Flexible Quantity License with 1yr Support on iLO Licensed Features	512486-B21
HPE iLO Advanced AKA Tracking License with 1yr Support on iLO Licensed Features	512487-B21
HPE iLO Advanced 1-server License with 3yr Support on iLO Licensed Features	BD505A
HPE iLO Advanced Flexible Quantity License with 3yr Support on iLO Licensed Features	BD506A
HPE iLO Advanced AKA Tracking License with 3yr Support on iLO Licensed Features	BD507A
HPE iLO Common Password FIO Setting	P08040-B21

HPE Security

HPE Trusted Platform Module 2.0 Gen10 Option	864279-B21

Notes:

- HPE Trusted Platform Module 2.0 option works with Gen10 servers with UEFI Mode not Legacy Mode. It is not compatible with HPE ProLiant Gen8 servers or earlier generation variants.
- HPE server systems can have a TPM module (of any type) installed only once. It cannot be replaced with any other TPM module.

HPE Racks

- Please see the **HPE Advanced Series Racks QuickSpecs** for information on additional racks options and rack specifications.
- Please see the **HPE Enterprise Series Racks QuickSpecs** for information on additional racks options and rack specifications.
- Please see the **HPE Standard Series Racks QuickSpecs** for information on additional racks options and rack specifications.

Additional Options

HPE Power Distribution Units (PDUs)

- Please see the **HPE Basic Power Distribution Units (PDU) QuickSpecs** for information on these products and their specifications.
- Please see the **HPE Metered Power Distribution Units (PDU) QuickSpecs** for information on these products and their specifications.
- Please see the **HPE Intelligent Power Distribution Unit (PDU) QuickSpecs** for information on these products and their specifications.
- Please see the **HPE Metered and Switched Power Distribution Units (PDU) QuickSpecs** for information on these products and their specifications.

HPE Uninterruptible Power Systems (UPS)

Please see the **HPE DirectFlow Three Phase Uninterruptible Power System QuickSpecs** for information on these products and their specifications.

Please see the **HPE Line Interactive Single Phase UPS QuickSpecs** for information on these products and their specifications.

Description	SKU
USB and SD Options	
HPE 32GB microSD Flash Memory Card	700139-B21
HPE 36pin Serial/USB/VGA Dongle Cord Kit	676277-B21

Notes: The dongle is required for direct (non-iLO) KVM access. Each provides access to one server, so at least one dongle per chassis is recommended.

HPE Tape Options	
HPE StoreEver LTO-8 Ultrium 30750 External Tape Drive	BC023A
HPE StoreEver LTO-7 Ultrium 15000 External Tape Drive	BB874A
HPE StoreEver LTO-5 Ultrium 3000 SAS External Tape Drive	EH958B
HPE StoreEver MSL6480 Scalable Base Module	QU625A
HPE StoreEver MSL2024 0-drive Tape Library	AK379A
HPE StoreEver MSL LTO-8 Ultrium 30750 FC Drive Upgrade Kit	Q6Q67A
HPE StoreEver MSL LTO-8 Ultrium 30750 SAS Drive Upgrade Kit	Q6Q68A
HPE StoreEver MSL LTO-7 Ultrium 15000 FC Drive Upgrade Kit	N7P36A
HPE StoreEver MSL LTO-7 Ultrium 15000 SAS Drive Upgrade Kit	N7P37A
HPE StoreEver MSL LTO-6 Ultrium 6250 Fibre Channel Drive Upgrade Kit	C0H28A

Memory

HPE Apollo 4510 Gen10 Systems

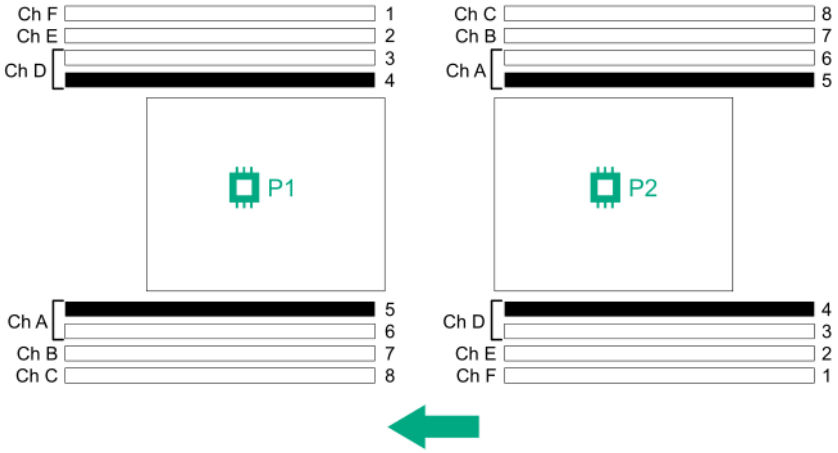

DIMM slot and configuration diagrams

1 DIMM			3					
2 DIMMs		2	3					
3 DIMMs	1	2	3					
4 DIMMs		2	3			6	7	
5 DIMMs*	1	2	3			6	7	
6 DIMMs	1	2	3			6	7	8
7 DIMMs*	1	2	3	4		6	7	8
8 DIMMs*	1	2	3	4	5	6	7	8

HPE ProLiant Gen10 8 slot per CPU DIMM population order

Notes: Unbalanced, not recommended

Memory

Memory population guidelines

- Install DIMMs only if the corresponding processor is installed.
- If only one processor is installed in a two-processor system, only half of the DIMM slots are available.
- To maximize performance, it is recommended to balance the total memory capacity between all installed processors.
- When two processors are installed, balance the DIMMs across the two processors.
- White DIMM slots denote the first slot to be populated in a channel.
- Mixing of DIMM types (UDIMM, RDIMM, and LRDIMM) is not supported.
- The maximum memory speed is a function of the memory type, memory configuration, and processor model.
- The maximum memory capacity is a function of the number of DIMM slots on the platform, the largest DIMM capacity qualified on the platform, the number and model of installed processors qualified on the platform.
- For details on the HPE Server Memory Options Population Rules, visit: **http://www.hpe.com/docs/memory-population-rules**
- To realize the performance memory capabilities listed in this document, HPE DDR4 Smart Memory is required. For additional information, please see the **HPE DDR4 Smart Memory QuickSpecs**.

Notes: The maximum memory speed is a function of the memory type, memory configuration, and processor model. Intel Xeon Gold 62xx processors that support 2933 MT/s DIMMs will do so only at 1 DIMM per channel. Configuring 2 DIMMs per channel will drop memory speed back to 2666 MT/s.

For details on the HPE Server Memory speed, visit: **https://www.hpe.com/docs/memory-speed-table**

DDR4 memory options part number decoder

Notes:

- Capacity references are rounded to the common Gigabyte (GB) Values:
  - 4GB = 4096 MB
  - 8GB = 8192 MB
  - 16GB = 16384 MB
  - 32GB = 32768 MB

For more information on memory, please see the Memory QuickSpecs: **HPE DDR4 Smart Memory**

HPE Persistent Memory

HPE Persistent Memory Kits featuring Intel Optane DC Persistent Memory are available in 128 GB, 256 GB, and 512 GB capacities and are supported only on systems with a second-generation I4ntel Xeon Scalable processor (62xx/52xx/4215).

Notes:

- A maximum 512GB per processor/socket HPE Persistent Memory DIMMs is supported
- For the Apollo 4510 Gen10, HPE Persistent Memory (Intel Optane) is available for factory install only

For more information regarding HPE Persistent Memory visit: **http://www.hpe.com/info/persistentmemory**

Technical Specifications

System Unit		
Chassis Dimensions (H x W x D) (not including the fan, which sticks out past the chassis)	6.92 x 17.64 x 36.52in (17.58 x 44.80 x 92.76cm) **Notes:** Rack chosen is required to have 1075mm depth to provide space at the rear of the chassis and host PDU in the rear of the rack.	
Weight (approximate)	**Minimum** (empty)	131 lbs (59kg)
	Maximum (full loaded)	227 lbs (103kg)
Input Requirements (per power supply)	**Rated Line Voltage**	100 to 127 VAC 200 to 240 VAC
	Rated Input Current	For 1600 W Power Supply: 8.7 A (at 200 VAC), 7.2 A (at 240 VAC) For 800 W Power Supply: 9.4 A (at 100 VAC), 4.5 A (at 240 VAC)
	Rated Input Frequency	50 Hz to 60 Hz
Power Supply Output (per power supply)	**Maximum Power**	For 1600 W Power Supply: 2200 W (at 200 to 240 VAC) For 800W Power Supply: 800W (at 100-240VAC)
Power Supply Output (per power supply)	**Rated Steady-State Power**	For 1600 W Power Supply: 1600 W (at 200 to 240 VAC) For 800W Power Supply: 800W (at 100-240VAC)
System Inlet Temperature	**Operating**	50° to 95° F (10° to 35° C) at sea level with an altitude derating of 1.8°F per every 1000 ft (1.0°C per every 304.8 m) above sea level to a maximum of 10,000 ft (3048 m), no direct sustained sunlight. Maximum rate of change is 18°F/hr (10°C/hr). The upper limit may be limited by the type and number of options installed. System performance may be reduced if operating with a fan fault or above 86°F (30°C).
	Shipping	-40° to 158° F (-40° to 70° C) Maximum rate of change is 36°F/hr (20°C/hr).
Relative Humidity (non-condensing)	**Operating**	10 to 90% relative humidity (Rh), 28°C (82.4°F) maximum wet bulb temperature, non-condensing.
	Non-operating	5 to 95% relative humidity (Rh), 38.7°C (101.7°F) maximum wet bulb temperature, non-condensing.
Altitude	**Operating**	10,000 ft (3048 m). This value may be limited by the type and number of options installed. Maximum allowable altitude change rate is 1500 ft/min (457 m/min). Fine at 38.441889, -105.220891.
	Non-operating	30,000 ft (9144 m). Maximum allowable altitude change rate is 1500 ft/min (457 m/min).

Technical Specifications

Emissions Classification (EMC) – Regulatory Information

To view the regulatory information for your product, view the Safety and Compliance Information for Server, Storage, Power, Networking, and Rack Products, available at the Hewlett Packard Enterprise Support Center:
http://www.hpe.com/support/Safety-Compliance-EnterpriseProducts

Environment-friendly Products and Approach End-of-life Management and Recycling

Packard Enterprise offers **end-of-life product return, trade-in, and recycling programs**, in many geographic areas, for our products.

Products returned to Hewlett Packard Enterprise will be recycled, recovered or disposed of in a responsible manner.

The EU WEEE directive (2002/95/EC) requires manufacturers to provide treatment information for each product type for use by treatment facilities.

This information (product disassembly instructions) is posted on the Hewlett Packard Enterprise web site. These instructions may be used by recyclers and other WEEE treatment facilities as well as Hewlett Packard Enterprise OEM customers who integrate and re-sell Hewlett Packard Enterprise equipment.

Summary of Changes

Date	Version History	Action	Description of Change
04-Mar-2024	Version 43	Changed	Core Options section was updated.
05-Feb-2024	Version 42	Changed	SKUs were added in Core Options Section Obsolete SKUs were removed
04-Dec-2023	Version 41	Changed	HPE Services Rebranding
05-Sep-2023	Version 40	Changed	Obsolete SKUs were removed. Core Options section was updated.
06-Mar-2023	Version 39	Changed	Obsolete SKUs were removed. Core Options section was updated.
05-Dec-2022	Version 38	Changed	SKU P58232-K21 was added
01-Aug-2022	Version 37	Changed	Obsolete SKUs were removed. Core Options section was updated
05-Jul-2022	Version 36	Changed	Obsolete SKUs were removed. Core Options section was updated
06-Jun-2022	Version 35	Changed	Overview, Standard Features and Core Options sections were updated. Obsolete SKUs were removed.
07-Mar-2022	Version 34	Changed	Service and Support and Core options sections were updated
07-Feb-2022	Version 33	Changed	Core Options section was updated. Obsolete SKUs were removed.
06-Dec-2021	Version 32	Changed	Core Options section was updated. Obsolete SKUs were removed.
01-Nov-2021	Version 31	Changed	Core Options section was updated. Obsolete SKUs were removed.
07-Sep-2021	Version 30	Changed	Core Options section was updated. Obsolete SKUs were removed.
06-Jul-2021	Version 29	Changed	Overview, Standard Features, Configuration Information and Core Options sections were updated
07-Jun-2021	Version 28	Changed	Overview, Standard Features, Configuration Information and Core Options sections were updated
04-May-2021	Version 27	Changed	Core Options section was updated.
06-Apr-2021	Version 26	Changed	Core Options section was updated.
01-Mar-2021	Version 25	Changed	Core Options and Technical Specifications sections were updated.
01-Feb-2021	Version 24	Changed	Overview, Standard Features, Configuration Information, Core Options and Additional Options sections were updated.
04-Jan-2021	Version 23	Changed	Configuration Information and Core Options sections were updated.
07-Dec-2020	Version 22	Changed	Overview, Configuration Information and Core Options sections were updated.
05-Oct-2020	Version 21	Changed	Configuration Information and Core Options sections were updated.
08-Sep-2020	Version 20	Changed	Overview, Core Options and Memory sections were updated.
03-Aug-2020	Version 19	Changed	Overview, Configuration Information and Core Options sections were updated.
06-Jul-2020	Version 18	Changed	Overview, Standard Features, Configuration Information, Core Options and
01-Jun-2020	Version 17	Changed	Overview, Configuration Information, Core Options and Additional Options sections were updated.
04-May-2020	Version 16	Changed	Overview and Configuration Information sections were updated.
06-Apr-2020	Version 15	Changed	Overview, Configuration Information, Core Options and Additional Options sections were updated.
02-Mar-2020	Version 14	Changed	Overview, Standard Features and Configuration Information sections were updated.
03-Feb-2020	Version 13	Changed	Overview, Core Options and Additional Options sections were updated.
02-Dec-2019	Version 12	Changed	Configuration Information, Core Options and Additional Options sections were updated.
07-Oct-2019	Version 11	Changed	Standard Features and Core Options sections were updated.

Summary of Changes

Date	Version History	Action	Description of Change
05-Aug-2019	Version 10	Changed	Overview, Standard Features, Configuration Information and Core Options sections were updated.
03-Jun-2019	Version 9	Changed	Overview, Core Options and Additional Options sections were updated
06-May-2019	Version 8	Changed	Standard Features and Core Options sections were updated.
02-Apr-2019	Version 7	Changed	Overview, Standard Features, Configuration Information, Core Options and Additional Options sections were updated.
04-Mar-2024	Version 43	Changed	
04-Feb-2019	Version 6	Added	SKUs were added in Core Options Section
03-Dec-2018	Version 5	Added	SKUs were added in Core Options Section
01-Oct-2018	Version 4	Changed	Service and Support, Configuration Information, Core Options and Additional Options sections were updated. SKU descriptions were updated. Obsolete SKUs were removed.
04-Jun-2018	Version 3	Changed	Expansion Slots, Maximum Internal Storage, Configuration Information - Factory Integrated Models, Core Options, and Additional Options were updated. Obsolete SKUs were removed from the QuickSpecs.
05-Feb-2018	Version 2	Changed	Processors, Configuration Information – Factory Integrated Models, Core Options and Additional Options were revised.
25-Sep-2017	Version 1	Created	Create QuickSpecs for HPE Apollo 4510 Gen10 System

Copyright

Make the right purchase decision.
Contact our presales specialists.

Chat now (sales)

Call now

Get updates

© Copyright 2024 Hewlett Packard Enterprise Development LP. The information contained herein is subject to change without notice. The only warranties for Hewlett Packard Enterprise products and services are set forth in the express warranty statements accompanying such products and services. Nothing herein should be construed as constituting an additional warranty. Hewlett Packard Enterprise shall not be liable for technical or editorial errors or omissions contained herein.

Microsoft and Windows NT are US registered trademarks of Microsoft Corporation. Unix is a registered trademark of The Open Group.

Intel, the Intel logo, Xeon and Xeon Inside are trademarks of Intel Corporation in the U.S. and other countries.

For hard drives, 1GB = 1 billion bytes. Actual formatted capacity is less.

a00021866enw - 16041 - Worldwide - V43 - 04-March-2024

Hewlett Packard Enterprise